You're viewing an archived copy from the New Jersey State Library.

NEW JERSEY REGISTER

IN THIS ISSUE
"INDEX OF PROPOSED RULES"

VOLUME 16 NUMBER 8
April 16, 1984 Indexed 16 N.J.R. 779-940
(Includes rules filed through April 2, 1984)

The New Jersey Register supplements the New Jersey Administrative Code. To complete your research of the latest State Agency rule changes, see the Rule Adoptions in This Issue, the Rule Adoptions in the April 2 issue, and the Index of Adopted Rules beginning on Page 751 of that issue.

TABLE OF RULES IN THIS ISSUE

RULE PROPOSALS

ADMINISTRATIVE LAW
Special education hearings: emergency relief applications ..... 780(a)
AGRICULTURE
Bovine tuberculosis testing ..... 782(a)
Commercial values for fertilizers and soil conditioners ..... 782(b)
BANKING
Investment restatement accounting: stock savings banks ..... 783(a)
COMMUNITY AFFAIRS
Local government deferred compensation programs: annual audit ..... 784(a)
EDUCATION
Seniority determination; classification of schools ... 785(a)
ENVIRONMENTAL PROTECTION
Shellfish-growing water classification ..... 786(a)
Dam safety standards ..... 790(a)
Licensing of medical radiologic technologists ..... 797(a)
HEALTH
Licensure fees for hospital facilities ..... 802(a)
Health care facilities: reporting information to Medical Examiners Board ..... 804(a)
Long-term care beds for former psychiatric patients 806(a)
Residential care facilities: Personal needs allowance . 808(a)
HUMAN SERVICES
Pharmacy Manual: claims requiring special handling 808(b)
Special Hospital Services: readopt coverage rules ... 809(a)
Physicians Services and Independent Clinic manuals: "Specialist" redefined ..... 811(a)
Dental Services Manual: fee schedule revisions; denture replacements ..... 813(a)
PAAD: Release of information ..... 823(a)
Lifeline and TLAP: Release of information ..... 824(a)
PAM: Continued absence of parent ..... 825(a)
PAM: administrative agency responsibilities ..... 826(a)
PAM: Minimum support assessment ..... 828(a)
AFDC: increase in allowance standards; legally responsible relatives schedules ..... 829(a)
AFDC: supplemental payments-retrospective budgeting ..... 832(a)
General Assistance: increase in allowance standards; legally responsible relative schedules ..... 833(a)
Capital Funding for community based facilities .... 835(a)
Development Disabilities Council: priority funding areas ..... 837(a)
LAW AND PUBLIC SAFETY
Discrimination against handicapped persons ..... 838(a)

(Continued on Back Cover)

You're viewing an archived copy from the New Jersey State Library.

RULE PROPOSALS

ADMINISTRATIVE LAW

(a)

OFFICE OF ADMINISTRATIVE LAW

Rules of Special Applicability
Special Education Hearings
Emergency Relief Pending Settlement or Decision

Proposed Amendment: N.J.A.C. 1:6A-3.1

Authorized By: Ronald I. Parker, Acting Director, Office of Administrative Law.
Authority: N.J.S.A. 52:14F-56 e, f and g.

Interested persons may submit in writing, data, views or arguments relevant to the proposal on or before May 16, 1984. These submissions and any inquiries about submissions and responses, should be addressed to:

Steven L. Lefelt, Deputy Director
Office of Administrative Law
185 Washington Street
Newark, NJ 07102

At the close of the period for comments, the Office of the Administrative Law thereafter may adopt this proposal, with any minor changes not in violation of the rulemaking procedures at N.J.A.C. 1:30-3.5. The adoption of these rules becomes effective upon publication in the Register of a notice of their adoption.

This proposal is known as PRN 1984-212.

The agency proposal follows:

Summary

The Office of Administrative Law is proposing to amend its rules concerning emergency relief applications in Special Education cases. The purpose of these proposed amendments is to minimize the number of improper applications for emergency relief which are being forwarded to the OAL. Due to the priority given and expediency required in scheduling and hearing emergency relief matters, it is important that the OAL not be unduly burdened with improper and insufficient requests for emergency relief. The proposed amendments clarify the types of cases which are suitable for the granting of emergency relief and provide a screening mechanism whereby only those applications which are prima facie appropriate for emergency relief will be transmitted to the OAL from the Department of Education. The proposed amendments do not require the Department of Education to weigh competing affidavits and proofs prior to transmittal to the OAL. The Department's screening is limited to evaluating whether, on the face of the application and supporting affidavits, emergency relief would be justified under N.J.A.C. 1:6A-3.1.

The proposed amendments limit emergency relief to physical harm situations. If the proposal is adopted, it will no longer be possible to assert mental and educational harm as grounds for emergency relief. The proposed amendments also detail the procedures and criteria which the OAL will follow in hearing and ruling upon these applications.

Specific provisions in these proposed amendments include:

1. Clarification of the standard which the judge will use in deciding emergency relief applications;
2. A requirement that only those applications which meet the procedural requirements and which set forth facts and circumstances justifying emergency relief will be forwarded by the Department of Education to the OAL;
3. A requirement that the Department of Education conduct a settlement conference for all emergency relief applications that are not forwarded to the OAL;

NEW JERSEY REGISTER The official publication containing notices of proposed rules and rules adopted by State agencies pursuant to the New Jersey Constitution, Art. V, Sec. IV, Para. 6 and the Administrative Procedure Act, N.J.S.A. 52:14B-1 et seq. Issued monthly since September 1969, and twice-monthly since November 1981.

Material published in the New Jersey Register is the property of the State of New Jersey. However, it may be copied, reproduced or republished by any person for any purpose whatsoever without permission, providing that no such reproduction or republication shall bear the title "New Jersey Register" or "Official Rules Publication" without the written permission of the Director, Office of Administrative Law.

The New Jersey Register (USPS 442-950) is published the first and third Monday of each month by Administrative Publications of the Office of Administrative Law, CN 301, Trenton, New Jersey 08625. Telephone: (609) 292-6060. Subscriptions, payable in advance, are one year, $40 ($90 by First Class Mail); back issues when available, $3.50 each. Make checks payable to Administrative Publications.

POSTMASTER: Send address changes to: New Jersey Register, CN 301, Trenton, New Jersey 08625. Second Class Postage paid in Trenton, New Jersey and additional mailing offices.

The NEW JERSEY ADMINISTRATIVE CODE is published on a continuing basis by Administrative Publications of the Office of Administrative Law. Subscription rates for this 31-volume, regularly updated set of all State administrative rules are available on request. The Code is sold either in the full set or in one to three volumes depending on the Department coverage desired.

You're viewing an archived copy from the New Jersey State Library.

4. To ensure a speedy and efficient process, an explicit time schedule for the transmittal of appropriate cases to the OAL;

5. A provision that prohibits adjournments of emergency relief hearings but permits an opponent to be heard by telephone;

6. The availability of a procedure similar to New Jersey Court Rule 4:52-1 (a) whereby an administrative law judge may issue a temporary relief order ex parte subject to a quick motion for dissolution or modification of the order by the absent party;

7. To prevent applicants for emergency relief from bypassing the settlement process set forth in N.J.A.C. 1:6A-3.2, the requirement that, at the conclusion of an emergency relief action, the matter must be returned to the Department of Education for a settlement conference.

Social Impact

Since Special Education hearings must be completed within strict time frames mandated by both Federal and State regulations, and as the OAL recognizes that a speedy hearing is very often essential in the proper educational placement of a child for an approaching school year, an expedited time schedule is already built into the OAL regulations for hearing and deciding Special Education cases, N.J.A.C. 1:6A. Thus, only in those instances where serious harm would result if a particular case were moved through the normal, expedited process should emergency relief be contemplated. Contentions relating to mental or educational harm can be heard most efficiently and effectively within the normal hearing process. It is believed that both contentions usually involve sophisticated proofs that do no lend themselves to emergency presentations.

Economic Impact

By developing a screening process to weed out improper emergency relief applications, the proposed amendments should save not only hearing expenses incurred by the OAL and the Department of Education but also litigation costs of the parties.

The requirement that concluded emergency relief cases should be returned to the Department of Education for a settlement conference will result in reduced litigation costs and should save administrative law judges the time and expense involved in attempting to settle these cases in the first instance prior to a hearing.

Full text of the rules may be found at 14 N.J.R. 930(a), 15 N.J.R. 25(b).

Full text of the proposal follows.

SUBCHAPTER 3. EMERGENCY RELIEF, SETTLEMENT AND SCHEDULING OF HEARING

1:6A-3.1 Emergency relief pending settlement or decision

(a) As part of a hearing request, or at any time after a hearing is requested, the affected parent(s), guardian, board or public agency may apply in writing for emergency relief pending a settlement or decision on the matter. **An emergency relief application shall set forth the specific relief sought and the specific circumstances which the applicant contends will cause serious physical harm to a student or students unless the requested relief is granted within the time demanded by the applicant. Each application shall be supported by an affidavit prepared by an affiant with personal knowledge of the facts contained therein and, if an expert's opinion is included, the affidavit shall specify the expert's qualifications.**

(b) Prior to the transmittal of the hearing request to the Office of Administrative Law, applications for emergency relief shall be addressed to the Department of Education, **attention Division of Special Education**, with a copy to the other party. The Department shall forward [the matter forthwith] to the Office of Administrative Law **by the end of the next business day all emergency relief applications that meet the procedural requirements (a) above and which set forth on the face of the application and affidavits circumstances which would justify emergency relief under this section. Emergency relief applications which show no right to emergency relief or fail to comply with the procedural requirements shall be processed by the Department in accordance with N.J.A.C. 1:6A-3.2.**

(c) After transmittal, applications for emergency relief must be made to the Office of Administrative Law, with a copy to the other party.

(d) The Office of Administrative Law shall [process any application for emergency relief, and shall schedule on an expedited basis any hearing deemed necessary.] **schedule an emergency relief application hearing on the earliest date possible and shall notify all parties of this date. No adjournments shall be granted but the opponent to an emergency relief application may be heard by telephone on the date of the emergency relief hearing.** [Other than in extraordinary circumstances, emergency relief shall not be granted until all parties have had an opportunity to be heard.] **If emergency relief is granted without all parties being heard, provision shall be made in the order for the absent parties to move for dissolution or modification on two business day's notice. Such an order, granted without all parties being heard, may also provide for a continuation of the order up to ten days.**

(e) [Where irreparable harm might otherwise result, emergency relief pending the full hearing decision may be granted.] **At the emergency relief hearing, the judge may allow the affidavits to be supplemented by testimony and/or oral argument. The judge may order emergency relief if the judge determines from the proofs that:**

1. The applicant has a reasonable probability of ultimately prevailing on the merits;

2. Serious physical harm will result to a student or students if the relief is not granted; and

3. The relief requested is narrowly defined to prevent the specific harm from occurring and will not cause unreasonable expense and substantial inconvenience.

(f) Judges may decide emergency relief applications orally on the record and may direct the prevailing party to prepare an order embodying the decision. If so directed, the prevailing party shall promptly mail the order to the judge and shall mail copies to every other party in the case. Unless a party notifies the judge and the prevailing party of his or her specific objections to the order within five business days after such service, the judge may sign the order.

(g) After granting or denying the requested emergency relief, the judge shall either return the parties to the Department of Education for a settlement conference under N.J.A.C. 1:6A-3.2 or schedule hearing dates if a settlement conference has already been conducted.

You're viewing an archived copy from the New Jersey State Library.

AGRICULTURE

(a)

DIVISION OF ANIMAL HEALTH

Tuberculosis Control and Eradication Times Established for Tuberculin Tests

Proposed Amendment: N.J.A.C. 2:2-3.3

Authorized By: Arthur R. Brown, Jr., Secretary, New Jersey Department of Agriculture.
Authority: N.J.S.A. 4:5-18 through 53.4.

Interested persons may submit in writing, data, views or arguments relevant to the proposal on or before May 16, 1984. These submissions, and any inquiries about submission and responses, should be addressed to:

Dr. Sidney R. Nusbaum, Director
Division of Animal Health
N.J. Department of Agriculture
CN 330
Trenton, New Jersey 08625
Telephone: (609) 292-3965

At the close of the period for comments, the Department of Agriculture thereafter may adopt this proposal, with any minor changes not in violation of the rulemaking procedures at N.J.A.C. 1:30-3.5. Upon adoption of these rules, a notice of the adoption shall be published in the Register. The adopted rules shall become effective upon publication of that notice of adoption in the Register.

This proposal is known as PRN 1984-213.

The agency proposal follows:

Summary

In the past, bovine tuberculosis was a serious problem to humans and cattle. However, over the past ten years, a high level of surveillance has not detected any infection in New Jersey. Formerly, an individual tuberculosis test of each cow was the principal tool used to identify infection. Now, examination of cattle at slaughter houses is accepted among animal health regulatory officials as the most significant tool of detection. Despite the changes, a low level of surveillance is still required. The proposal amends the current time for testing from every three years to every five years. This is deemed to be adequate for surveillance purposes.

Social Impact

The proposal directly affects cattle dealers and owers who now will be allowed to test dairy herds every five years instead of every three years.

Economic Impact

The amendment has little general economic impact. It would require cattle owners who wish to have their herds tested yearly for purposes of sale (required by some states) to have additional tests performed at their own cost, but this would not be a significant factor in their overall operation. The effects on the Department would be salutory, as the present program is not cost-effective and the change would lessen the need to hire additional personnel.

Full text of the proposal follows.

2:2-3.3 Times established for tuberculin tests

(a) All dairy herds producing milk for sale shall be tuberculin tested every [three] **five** years.

(b) (No change.)

(b)

DIVISION OF REGULATORY SERVICES

Commercial Fertilizer and Soil Conditioner Commercial Values

Proposed Amendment: N.J.A.C. 2:69-1.11

Authorized By: Arthur R. Brown, Jr., Secretary, Department of Agriculture.
Authority: N.J.S.A. 4:9-15.26, 4:9-15.33.

Interested persons may submit in writing, data, views or arguments relevant to the proposal on or before May 16, 1984. These submissions, and any inquiries about submissions and responses, should be addressed to:

Robert C. Fringer, Director
Division of Regulatory Services
New Jersey Department of Agriculture
CN 330
Trenton, New Jersey 08625

The Department of Agriculture thereafter may adopt this proposal without further notice (see N.J.A.C. 1:30-3.5). The adoption becomes effective upon publication in the Register of a notice of adoption.

This proposal is known as PRN 1984-214.

The agency proposal follows:

Summary

The proposal continues the present commercial values for fertilizers and soil conditioners for the period of one year ending June 30, 1985, with one amendment. The amendment increases the commercial value for available phosphoric acid from $2.80 to $3.00 per unit. The assessed penalties for deficient fertilizer are assessed on these values and charged to the manufacturer. The State Treasurer receives all unclaimed penalties.

Social Impact

The proposal will affect both consumers and manufacturers of fertilizer and soil conditioners through June 30, 1985. The consumers will be further protected by the rule and manufacturers will have to maintain proper quality control to maintain the integrity of their products.

Economic Impact

All consumers of fertilizer will have monetary protection when deficient fertilizers are detected. These consumers will be equitably compensated for all losses. Fertilizer manufacturers will exhibit care in controlling their formulating process to avoid penalties.

You're viewing an archived copy from the New Jersey State Library.

Full text of the proposal follows (additions indicated in boldface **thus**; deletions indicated in brackets [thus]).

2:69-1.11 Commercial values
(a) The State Board of Agriculture, pursuant to N.J.S.A. 4:9-15.26, determines the commercial values of primary plant nutrients to be:
1.-2. (No change)
3. Available phosphoric acid: [$2.80] **$3.00** per unit.
4. (No change.)
(b) These values shall be effective from July 1, [1983] **1984** through June 30, [1984] **1985**.

BANKING

(a)

DIVISION OF BANKING

Investment Restatement Accounting

Proposed Amendments: N.J.A.C. 3:6-7.2, 7.3, 7.6, 7.8

Authorized By: Michael M. Horn, Commissioner, Department of Banking.
Authority: N.J.S.A. 17:1-8.1 and 17:9A-256(A).

Interested persons may submit, in writing, data, views or arguments relevant to the proposal on or before May 16, 1984. These submissions, and any inquiries about submissions and responses, should be addressed to:

Roger F. Wagner, Deputy Commissioner
Department of Banking
Division of Banking
CN 040
Trenton, New Jersey 08625

The Department of Banking thereafter may adopt this proposal without further notice (see N.J.A.C. 1:30-3.5). The adoption becomes effective upon publication in the Register of a notice of adoption.
This proposal is known as PRN 1984-196.

The agency proposal follows:

Summary

The rules regarding Investment Restatement Accounting were originally proposed at 14 N.J.R. 676(a) and adopted effective September 7, 1982, at 14 N.J.R. 988(a). The rules established a new method of accounting of savings banks for the purpose of preparing reports of income and condition for the Department of Banking.

The proposed amendments to the rules will delete stock savings banks from those institutions which will be subject to the regulations. At the time the rules were adopted, there were no stock savings banks. Since that time, two mutual savings banks have converted to stock charters. The amendments will bring these rules in line with similar regulations which provide for Investment Restatement Accounting in State chartered savings and loan associations. Stock savings and loan associations are not subject to the rules.

Social Impact

The removal of stock savings banks from the requirements of the rule will allow stockholders, potential investors and Federal and State regulators to make appropriate comparisons between these stock savings banks and other thrift institutions with similar capital structures, without having to make adjustments for Investment Restatement Accounting.

Economic Impact

Their will be no direct economic impact on the State, or the institutions affected, by the proposed amendments. However, stock institutions are mandated through Securities and Exchange requirements to present statements in compliance with Generally Accepted Accounting Principles (GAAP). Investment Restatement Accounting does not conform to GAAP. By modifying these rules, to preclude stock institutions from its requirements, such institutions will be able to present statements which comply with the Federal requirements.

Full text of the proposal follows (deletions indicated in brackets [thus]).

3:6-7.2 Reports of income and condition
(a) For the purpose of preparing reports of income and condition for the Department of Banking, every insured mutual [and stock] savings bank shall, as of the opening of business July 1, 1982, restate the book values of all debt securities and mortgages held by it to their reasonably estimated current values.
(b)-(d) (No change.)

3:6-7.3 Debt securities and mortgages
(a) Each insured mutual [and stock] savings bank shall provide the Department of Banking with a certified copy of a resolution of its board of directors establishing the amount of the Investment Restatement Account allocated as to debt securities and mortgages, the term of amortization for the Investment Restatement Account, and the weighted average remaining life of debt securities.
(b) Each insured mutual [and stock] savings bank shall provide to the Department of Banking a written statement from a certified public accountant or other person or persons approved by the Commissioner setting forth the method used to determine the weighted average remaining life of restated debt securities and stating that values assigned to the restated debt securities and restated mortgages were calculated pursuant to the standards of reasonably estimated current values set forth herein.
(c) (No change.)

3:6-7.6 Advertising
Notwithstanding any provisions of this regulation, no mutual [or stock] savings bank may utilize earnings reported under investment restatement accounting procedures during any period in any advertising, promotion, or solicitations, unless the amount of earnings resulting from restatement are clearly identified and noted.

3:6-7.8 Business plans
The Commissioner may, in his discretion, require a mutual [or stock] savings bank to prepare and submit a detailed plan

You're viewing an archived copy from the New Jersey State Library.

forecasting future operations and the restructuring of its asset portfolio at any time after July 1, 1982.

COMMUNITY AFFAIRS

(a)

DIVISION OF LOCAL GOVERNMENT SERVICES

Municipal and County Deferred Compensation Programs Requirement for Annual Program Audit

Proposed Amendment: N.J.A.C. 5:37-11.6

Authorized By: Barry Skokowski, Director, Division of Local Government Services.
Authority: N.J.S.A. 43:15B-3.

Interested persons may submit in writing, data, views or arguments relevant to the proposal on or before May 16, 1984. These submissions, and any inquiries about submissions and responses, should be addressed to:

Barry Skokowski, Director
Division of Local Government Services
Department of Community Affairs
363 W. State Street
CN 803
Trenton, New Jersey 08625

The Department of Community Affairs thereafter may adopt this proposal without further notice (see: N.J.A.C. 1:30-3.5). The adoption becomes effective upon publication in the Register of a notice of adoption.

This proposal is known as PRN 1984-197.

The agency proposal follows:

Summary

The Fedeal Internal Revenue Code permits state and local governments to establish deferred compensation programs for their employees. Counties, municipalities and authorities in New Jersey are authorized to establish deferred compensation programs under N.J.S.A. 43:15B-1 et seq. The Director of the Division of Local Government Services is authorized to adopt regulations governing the deferred compensation programs of local governments pursuant to P.L. 1980, c.78, as amended. These State regulations were adopted on an emergency basis in October, 1980, and amended in December, 1980, to allow jurisdictions to establish programs during that year.

Under existing regulations, local government units which have established deferred compensation programs are required to audit program funds on an annual basis by an outside independent auditor. If a private contractor is retained by a local unit to administer all or part of the program, the annual audit must cover the program funds under the control of the contractor, and the expense of the audit must be incurred by the contractor.

All money deferred and deducted in accordance with deferred compensation programs remains the asset of the employer until it is distributed to employees. Funds deferred under these local government programs are considered public money until distributed to employees upon their retirement, death, disability, termination of service or an unforeseeable emergency. An annual audit of each deferred compensation program is, therefore, required to ensure that funds are managed appropriately and according to New Jersey laws and regulations.

Since the deferred compensation regulations have been in effect, many contractors retained to administer local government programs have demonstrated that the expenses incurred for an annual audit by an outside independent auditor of each program under contract place an unreasonable financial burden on the private contractor. Such expense on the contractor would cause a considerable increase in administrative fees to program participants. The cost of the annual audit, as required in the existing regulations, makes it unfeasible for some contract administrators to even offer public employee deferred compensation programs in this State.

The original proposal was published in the September 6, 1983 Register at 15 N.J.R. 1408(b). Since the Division has made several substantive changes from the original proposal, the entire sale is being reproposed. The proposed amendment relieves contractors of the high cost of an annual audit by an outside independent auditor by requiring that an annual program review by performed by a municipal accountant. The review consists of an evaluation of the program funds based on the annual financial report issued by the contractor on the program, the employer's payroll records, and the program's joinder agreements. After completing the evaluation, the registered municipal accountant shall make an appropriate statement and transmit a copy of the review to the Director. Furthermore, it is proposed that the cost of this review be incurred by the party(ies) agreed upon at the time the contract is awarded. Under the proposed amendment, employers self-administering a deferred compensation program are required to have the program audited by an outside independent registered municipal accountant as part of their regular annual audit.

As an additional safeguard, the proposal requires contractors to submit to the employer applicable program statements together with their latest annual firm audit. Private contractors must also submit to the Director a letter of internal accounting control and certify that the annual accounting data supplied to the employer is accurate and complete.

The proposal also changes the time period for completion of the audit or review. The existing regulations require the program to be audited within three months of the accounting date while the proposal permits the audit or review to be completed within five months after the close of the fiscal year. The audit report or review must be submitted to the Director of the Division of Local Government Services. For programs administered by a contractor, the auditor may include a statement on the review in the employer's annual audit as well.

Social Impact

The impact of the proposed amendment is limited to those local governments which operate a deferred compensation program, to contractors offering deferred compensation programs, and to participants of such programs. With little change in the intent of the requirement for an annual audit, this proposal eliminates the administrative and financial burden placed on deferred compensation contractors by the exist-

You're viewing an archived copy from the New Jersey State Library.

ing audit requirement. The change in the time period for completion and submission of the audit or review to the Director of the Division of Local Government Services will enable local units to comply with the regulation more effectively and efficiently. Participants will benefit from the proposed amendment through the assurance that program records are accurate and program funds are protected against mismanagement.

Economic Impact

Employers self-administering a deferred compensation program may realize cost savings due to the change in the time period for completion of the audit. Contractors administering local deferred compensation programs will realize the greatest cost savings from the proposal since they will no longer be required to automatically assume all costs of the annual audit of each program they administer. Fees charged to participants to cover audit expenses should be reduced or eliminated. Participants will also benefit from the protections against mismanagement of program funds. The employer will have the option of absorbing all, a portion, or none of the expenses of the review.

Full text of the proposal follows (additions indicated in boldface **thus**; deletions indicated in brackets [thus]).

5:37-11.6 Audit **or review**

(a) [The] **If the program is self-administered and all records are held by the employer, the** employer shall cause [the program to be audited] **an audit of all program funds** within [three] **five** months [of the accounting date] **after the close of its fiscal year, per N.J.S.A. 40A:5-3,** by [the] **an** outside, independent [auditor;] **registered municipal accountant.** A copy of each audit report shall be transmitted to the Director within [one month after said audit is completed.] **five days thereafter, per N.J.S.A. 40A:5-6.**

[1.] **(b)** If a private contractor is retained to administer all or part of the program and/or is retained to invest program funds, [said audit, at the expense of the contractor, shall extend to cover any program funds under the control of any such contractor.] **the employer shall cause a review of all program funds within five months after the close of the employer's fiscal year by the outside, independent registered municipal accountant pursuant to 4. below. A copy of each review shall be transmitted to the governing body and to the Director within five days thereafter.**

1. The private contractor must transmit to the employer a compilation of financial data in statement form giving a full accounting of all program transactions occurring during the employer's fiscal year, including beginning and ending fund balance. The accounting for the transactions must reflect each participant's amount and date of each contribution received, the beginning fund balance by investment option, earnings and/or losses incurred, administrative charges and fees assessed, any transfers made among funds, all deposits and withdrawals, and the ending fund balance, including any and all adjustments made to such program funds. The private contractor must also submit to the employer applicable program statements together with the opinion from their latest firm audit report prepared by their Independent Public Accountant.

2. The outside independent auditor of the employer shall then evaluate the employer payroll records and joinder agreements against the information transmitted by the private contractor.

3. The outside independent auditor shall make an appropriate statement and express limited assurances thereon. These assertions may be made part of the employer's annual audit, per N.J.S.A. 40A:5-4, in addition to being transmitted upon separate cover to the Director pursuant to (b) above.

4. The review, as set forth in 1. above, shall be made in accordance with the AICPA's Statement on Standards for Accounting, the Review Services No. 1, as defined in "Review of Financial Statement," subject to such qualitative inquiry and analytical procedures selected and performed, causing attention to questionable items, procedures and/or practices of a material nature, perhaps constituting a need for balances to be adjusted or creating a need for further auditing.

5. The expense of the review shall be incurred by the party(ies) agreed upon at the time the contract is drawn.

6. The private contractor must also furnish a letter of internal accounting control to the Director, prepared by its independent accountant attesting to the private contractor's internal controls.

7. The private contractor must further certify to the Director that the annual accounting data supplied to the employer is accurate and complete.

EDUCATION

(a)

STATE BOARD OF EDUCATION

School Districts; Standards for Determining Seniority; Approval of High Schools; Classification of Schools

Proposed Amendments: N.J.A.C. 6:3-1.10 and 6:27-1.2

Authorized By: New Jersey State Board of Education, Saul Cooperman, Secretary.

Authority: N.J.S.A. 18A:4-10, 18A:4-15, 18A:4-23, 24, 25, 18A:28-9 et. seq. and 18A:45-1.

Interested persons may submit in writing, data, views or arguments relevant to the proposal on or before May 16, 1984. These submissions, and any inquiries about submissions and responses, should be addressed to:

Lorraine L. Colavita
Executive Assistant for Administrative
Practice and Procedure
Department of Education
225 West State Street
Trenton, New Jersey 08625

At the close of the period for comments, the State Board of Education may adopt this proposal, with any minor changes not in violation of the rulemaking procedures at N.J.A.C. 1:30-3.5. Upon adoption of these amendments, a notice of the adoption shall be published in the Register. The adoption shall become effective upon publication of that notice in the Register; however, the amendments shall become operative on September 1, 1984.

This proposal is known as PRN 1984-200.

You're viewing an archived copy from the New Jersey State Library.

The agency proposal follows:

Summary

The proposed amendments are being introduced to correct an inequity which occurs whenever a school district restructures its grade level organization to eliminate its formal junior high school as defined in N.J.A.C. 6:27-1.2(a) and creates a "middle school" either by establishing a grade seven and eight school or combining grades seven and eight with one or more lower grades. Under N.J.A.C. 6:3-1.10, whenever a reorganization takes place, principals, vice principals or assistant principals of junior high schools lose all seniority entitlement, since the reorganized schools are by definition considered elementary schools. Since declining enrollment has made grade level reorganization a common method of adjusting to the need for fewer school buildings, the inequities of the situation designated above have been increasing.

The proposed amendments to N.J.A.C. 6:3-1.10 will permit the accumulated seniority of junior high school principals, assistant principals or vice principals to be transferred to the newly reorganized schools. Further, upon said transfer of seniority, the district board of education shall have the option of determining the category, elementary or junior high, in which the administrators of said schools shall accrue seniority in the future. The operative date of subsection(m) will be September 1, 1984.

The amendment to N.J.A.C. 6:27-1.2(b) is being proposed in conjunction with the amendment to N.J.A.C. 6:3-1.10. The aforesaid proposed amendment safeguards the accumulated seniority of junior high principals, assistant principals or vice principals whenever junior high schools are reorganized either by creation of a grade seven and eight school or by combining grade levels seven and eight with one or more elementary grades. The amendment to N.J.A.C. 6:27-1.2(b) is being proposed to make it possible for a district board of education to designate a so-called "middle school" as being within either the elementary or secondary classification for purposes of future seniority determinations. Said flexibility of designation will permit district boards of education to continue to organize instruction in their middle grades in a manner consistent with the district's philosophy and likewise to designate the nature of administrative experience and expertise necessary for supervising instruction in those grades. The operative date for this change will be September 1, 1984.

Social Impact

The impact of the above cited amendments will be limited to the principals, assistant principals or vice principals whose seniority entitlement would have been eliminated prior to the amendment and to those elementary principals, vice principals or assistant principals who could have asserted seniority claims under the existing rules.

Economic Impact

There will be no additional cost to school districts or to the State resulting from the adoption of the proposed amendments since the adoption of said amendments results only in a change in who may claim seniority but does not either increase staff or create implementation costs.

Full text of the proposal follows.

6:3-1.10 Standards for determining seniority

(a)-(l) (No change.)

(m) [This section shall apply prospectively to all future seniority determinations as of the operative date of this rule, September 1, 1983.] **In the event of a restructure of grade levels which results in the elimination of all junior high schools (as defined by N.J.A.C. 6:27-1.2) in the district and the creation of schools with a grade level organization which includes grades seven and eight with or without one or more elementary grades, the seniority rights of principals, vice principals and assistant principals shall be transferable to the newly reorganized schools, in the category designated by the district board of education, in its classification plan adopted in compliance with N.J.A.C. 6:27-1.2.**

6:27-1.2 Classification of schools

(a) (No change.)

(b) [Partial high schools shall not be eligible for approval.]

Grades seven and eight with or without one or more elementary grades may be classified as either elementary or junior high school as determined by the district board of education. The district board of education shall, by formal resolution, designate the classification for these grades in accordance with the plan of school organization of the district.

ENVIRONMENTAL PROTECTION

(a)

DIVISION OF WATER RESOURCES BUREAU OF SHELLFISH CONTROL

Shellfish-Growing Water Classification

Proposed Amendments: N.J.A.C. 7:12-1.3, 1.4

Authorized by: Robert E. Hughey, Commissioner, Department of Environmental Protection.

Authority: N.J.S.A. 13:1D-1, 13:1B-5, 58:24-1 et seq.

DEP Docket No. 009-84-03.

Interested persons may submit in writing, data, views or arguments relevant to the proposal on or before May 16, 1984. These submissions, and any inquiries about submissions and responses, should be addressed to:

William J. Eisele Jr., Chief
Department of Environmental Protection
Bureau of Shellfish Control
Richards Lane, Leeds Point
Star Route
Absecon, New Jersey 08201

The Department of Environmental Protection thereafter may adopt this proposal without further notice (see: N.J.A.C. 1:30-3.5). The adoption becomes effective upon publication in the Register of a notice of adoption.

This proposal is known as PRN 1984-191.

You're viewing an archived copy from the New Jersey State Library.

The agency proposal follows:

Summary

The Department of Environmental Protection proposes to amend its rules on the classification of certain shellfish beds as the result of surveys conducted by the Bureau of Shellfish Control.

The investigatory work consists of the collection and analysis of water samples, the inventory of actual and potential sources of pollution, and hydrographic studies of flow patterns which distribute pollution. These surveys are conducted in accordance with applicable State and Federal (Food and Drug Administration (FDA)) guidelines and regulations. The FDA further requires that each state appraise, every two years, the quality of those waters approved for the harvest of shellfish. New Jersey conducts investigatory work and research and, pursuant to N.J.S.A. 58:24-1 et seq., revises the regulations annually.

Most of the acreages are proposed for reclassification because of either (1) formalizing regulations, (2) improved water quality resulting from new or enhanced regional wastewater treatment facilities, or (3) degraded water quality due to inadequate sewage treatment.

The reclassification of certain waters contiguous to the Shrewsbury River does not represent a degradation in water quality. Submitted at the request of the shellfish industry, this action expresses an administrative effort to bring N.J.A.C. 7:12-1 (Classification of Certain Shellfish Waters) into conformity with N.J.A.C. 7:12-2 (Special Permits) and N.J.A.C. 7:17 (Hard Clam Depuration Pilot Plant Program). These restrictions were instituted when depuration was first established in New Jersey in 1974 and do not represent new limitations on the ongoing depuration program.

Continued improvement in the operation of the Atlantic County Utilities Authority regional wastewater treatment facility and the completion of the Cape May County Utility Authority, Ocean City plant, permits the upgrading of waters in the ocean off Atlantic City and the backbay and thoroughfares behind Ocean City.

The proposed downgraded reclassification in Townsend Sound and Stites Sound is a result of a sharp deterioration of water quality in these areas. It appears that wastewater flows in excess of design capacity of the local municipal wastewater treatment plants are a source of these problems. These facilities are scheduled for replacement. A modern wastewater treatment facility with an ocean discharge is expected to improve water quality in this area.

These proposed rules will result in the reclassification of approximately 8128 acres. The names of the waterways and number of acres reclassified are listed below in general terms:

Chart No.	Area	Reclassification Proposed	Acres
2	Shrewsbury River	Special Restricted to Condemned	680
7	Atlantic Ocean	Condemned to Approved	3170
7	Reed Bay	Condemned to Approved	119
7&8	Ocean City-Somers Pt.	Seasonal to Approved	2775
8	Ocean City-Peck Bay	Seasonal to Approved	258
8	Sea Isle City-Avalon Area	Approved to Condemned	658
10	Delaware Bay Bidwell Creek	Seasonal to Condemned	30
	Beadons Pt Shoreline	Approved to Condemned	438

Social Impact

This proposal to amend the classifications of New Jersey's shellfish growing waters is expected to have a positive social impact through increased public confidence in the quality of the shellfish and shellfish products harvested in our estuarine and marine waters. Reinforcing the positive aspect of these reclassifications, it should be realized that there will be an upgrading of 6322 shellfish growing water acres. This proposal will therefore support the public's longstanding concern and effort to improve the quality of the State's coastal and estuarine waters.

Economic Impact

The numerous benefits to New Jersey's economic well-being generated by commercial and recreational shellfishing will be insured by the ongoing water quality investigations that culminate in this proposal. The lack of shellfish related illnesses being reported in the recent past has maintained public confidence and thus stabilized the market value of shellfish and shellfish products in this State. Unfortunately, this has not been the case nationwide, where in some areas shellfish markets have been devasted by outbreaks of illness attributed to consumption of shellfish. The adoption of this proposal in its entirety will aid the harvesters as well as the consumer of shellfish products by assuring that only safe, wholesome shellfish reach the marketplace.

Similarly, but from a slightly different perspective, the upgrading of 6322 shellfish growing water acres will have positive economic impact on the shellfish industry and consumer alike. Although the exact dollar amount cannot be estimated, it is known that this proposal will provide more of the shellfish resource to the harvester and consumer.

There is, to a lesser degree, a negative economic impact since an additional 1126 acres of shellfish producing waters will be placed off limits to direct market harvesting while 680 acres that are currently not available for direct market are being formally Condemned.

Environmental Impact

The proposed upgrading of waters in the Atlantic Ocean, Reed Bay and the Ocean City-Somers Point vicinity can be directly related to the State's continuing efforts to reduce the amount of pollutants being placed in our waterways through the construction of regionalized wastewater treatment facilities.

The planned wastewater treatment facilities in Cape May County should, when completed, reverse the downgrading of shellfish waters in that area. In addition to increasing the waters available to shellfishing, these improvements and planned improvements in wastewater treatment will enhance all water related uses of the marine and estuarine environment.

Full text of the proposal follows (additions indicated in boldface **thus**; deletions indicated in brackets [thus]).

7:12-1.3 Growing water condemnations

(a) Charts designating [Condemned areas] **growing water classifications** as hereinafter described are available from the Bureau of Shellfish Control Offices, Marine Police Stations, and Shellfisheries Field Offices at Bivalve and Nacote Creek. However, all persons are cautioned that emergency closures may be necessary and may not be charted. These [Approved Area] **Shellfish Growing Water Classification** Charts are developed from Nautical Charts Number 12327 New York Har-

You're viewing an archived copy from the New Jersey State Library.

bor, [76th Edition, December 20, 1980] **79th Edition, July 2, 1983**; Number 12324 Intracoastal Waterway, Sandy Hook to Little Egg Harbor, [19th Edition, December 13, 1980] **21st Edition, March 5, 1983**; Number 12316 Intracoastal Waterway, Little Egg Harbor to Cape May, [18th Edition, December 6, 1980] **20th Edition, November 27, 1982**; and Number 12304 Delaware Bay, [27th Edition, March 28, 1981] **28th Edition, April 17, 1982**. The State Department of Environmental Protection hereby condemns all shellfish growing waters or other places from which shellfish are or may be taken, at all times of the year, except when otherwise noted in N.J.A.C. 7:12-1.4, 1.5, and 1.6.

1.-3. (No change.)

4. Shrewsbury River area [a special restricted area: All of the Shrewsbury River and tributaries thereof (not including the Navesink River) south from the Route 36 highway bridge.] **(A portion is designated as a Special Restricted Area):**

i. All the waters of the Shrewsbury River and tributaries thereof (not including the Navesink River) south from the Route 36 Highway bridge;

ii. Special Restricted area: All of the Shrewsbury River and tributaries thereof (not including the Navesink River. (a)5 below) with the exception of those areas listed below which shall remain Condemned.

(1) All of Oyster Bay and its tributaries;

(2) All waters in Little Silver Creek and its tributaries north and west of a line beginning on the eastern bank of that unnamed lagoon located between Wardell Avenue and Oakes Road in Rumson and bearing approximately 171 degrees T to its terminus on the southshore of Little Silver Creek (additionally, the lagoon located between Wardell Avenue and Rivers Edge Drive in Rumson as well as the lagoon located between Rivers Edge Drive and Rumson Drive in Rumson shall remain Condemned in their entirety);

(3) All waters of Town Neck Creek and its tributaries west of a line beginning on the easternmost extent of the unnamed point of land located just east of Paag Circle on the south bank of Town Neck Creek and bearing approximately 095 degrees T and terminating on Silver Point;

(4) All of Parker Creek and its tributaries west of a line beginning on the easternmost extent of Horseneck Point and bearing approximately 000 degrees T to its terminus on Breezy Point on the Little Silver side (north) of Parker Creek;

(5) All of Oceanport Creek and its tributaries south and west of a line beginning on the easternmost extent of Horseneck Point and bearing approximately 140 degrees T to its terminus on the westernmost extent of an unnamed point of land located at the westernmost extent of Monmouth Boulevard in Oceanport;

(6) All of Blackberry Creek and its tributaries located south of a line beginning on the easternmost extent of Gooseneck Point and bearing approximately 162 degrees T to its terminus on the westernmost extent of an unnamed point of land located in the vicinity of the western extent of Cayuga Avenue in Oceanport;

(7) All of the waters of Branchport Creek, Troutmans Creek, Pleasure Bay, Manhassett Creek and their tributaries, located south of a line beginning on the northernmost extent of an unnamed point of land lying north of Pocano Avenue in Oceanport and bearing approximately 055 degrees T to its terminus on the westernmost extent of the northern bulkhead at the lagoon located between Frances Avenue and Lori Road in Monmouth Beach;

(8) All waters south and east of a line beginning on the northwesternmost point of land on Racoon Island (in the vicinity of the western extent of Highland Avenue), in Monmouth Beach, and bearing approximately 056 degrees T to the southernmost point of a small unnamed island, and then bearing approximately 091 degrees T to its terminus on the northernmost point of land located at the northern extent of Monmouth Parkway in Monmouth Beach; and

(9) All waters south of a line beginning on the western shoreline (immediately east of Monmouth Parkway in Monmouth Beach) and bearing approximately 081 degrees T, intersecting Channel Marker Flashing Red 4 and Channel Marker Flashing Red 2 (Fl R "4" and Fl R "2") and terminating on the eastern shoreline of the Galilee section of Monmouth Beach.

5.-23. (No change.)

24. Reed Bay area: [(A portion is designated as Seasonal. See N.J.A.C. 7:12-1.4.):]

[i. All the waters north of west of a line beginning at the most southerly point of land on the west side of Somers Cove and bearing approximately 215 degrees T and terminating on the mainland southwest from the mouth of Conover Creek;]

i. All the waters northwest of a line from a Department-maintained marker southwest of Somers Cove and bearing approximately 215 degrees T to another Department-maintained marker on an unnamed point of land and terminating (this line condemns an unnamed cove adjacent to the Seaview Country Club golf course);

ii.-v. (No change.)

25.-30. (No change.)

31. Strathmere and Sea Isle City area (A portion is designated as Seasonal. See N.J.A.C. 7:12-1.4.):

i.-vi. (No change.)

vii. [All of Sunks Creek, Mill Creek, Ware Thorofare and that portion of Mill Thorofare from Townsend Sound to, and including, the entrance to Ware Thorofare;] **All of Sunks Creek, Mill Creek, Ware Thorofare, Clem Thorofare, Mill Thorofare, Townsend Sound and portions of Townsend Channel and tributaries thereof northwest of a line from a Department-maintained marker at the tip of an unnamed peninsula (approximately 1000 yards north of N "140" buoy) and bearing approximately 212 degrees T to a Department-maintained marker on the adjacent shoreline;**

viii. (No change.)

32. Avalon area:

i.-vi. (No change.)

vii. [All of South Channel from a straight line beginning at the easternmost tip of the unnamed island at the confluence of South Channel and North Channel and bearing approximately 152 degrees T toward Channel marker R "6" located in Ingram Thorofare to a line that begins at the northernmost point of the unnamed island on the northside of the west entrance to South Channel and bearing approximately 246 degrees T and terminating on the western bank of the entrance to Leonard Thorofare.] **All of South Channel and Stites Sound contained within a line from the Department-maintained marker at the easternmost tip of the unnamed island at the confluence of South Channel and North Channel and bearing approximately 152 degrees T to another Department-maintained marker, then along the shoreline of South Channel in a westerly direction, across the mouth of Leonard Thorofare, then in a northerly direction along the shoreline of Stites Sound to a Department-maintained marker at the mouth of the second unnamed creek and bearing approximately 063 degrees T to a Department-maintained marker at the mouth of Middle Thorofare and along the shoreline in a southeasterly direction across the mouth of North Channel**

You're viewing an archived copy from the New Jersey State Library.

and along the western shorelines of a series of four unnamed, adjacent islands to the point of origin and terminating.

viii. (No change.)

33.-36. (No change.)

37. Delaware Bay area (A portion is designated as Seasonal. See: N.J.A.C. 7:12-1.4.):

i.-ii. (No change.)

iii. Bidwell Creek [(A portion is designated as Seasonal. See N.J.A.C. 7:12-1.4.): All of Bidwell Creek and tributaries upstream from the easterly side of the Route 47 bridge;] **All of Bidwell Creek;**

iv.-xi. (No change.)

xii. Fortescue Creek: All of Fortescue Creek;

xiii. All of that portion of Delaware Bay and tributaries thereof inshore of a line from a Department-maintained marker at Beadon Point and bearing approximately 309 degrees T towards flashing light (F1 4 sec 16 ft 6M), but terminating at a Department-maintained marker on the shoreline at Nantuxent Pt.

38. (No change.)

39. Atlantic Ocean:

i.-ii. (No change.)

iii. All of the ocean waters inshore of a line beginning at the water tank at 44th Street and Bayshore Avenue, City of Brigantine, with coordinates of latitude 39 degrees 23.4 minutes N., longitude 74 degrees 23.4 minutes W., and bearing approximately 157 degrees T for approximately 2.5 nautical miles to a point with coordinates of latitude 39 degrees 21.2 minutes N., longitude 74 degrees 22.5 minutes W. (generally marked by a buoy charted as "1A" F1 G 4 sec GONG at the entrance to Absecon Inlet), then bearing approximately 276 degrees **T** (reciprocal 096 degrees T) for approximately 1.9 nautical miles towards the outermost tip of Garden Pier, Atlantic City, until it is 0.25 nautical miles directly offshore, then parallel along the shoreline in a southwesterly direction, 0.25 nautical miles offshore, for approximately [0.4] **1.3** nautical miles until it intersects a line bearing approximately 153 degrees T from the [tip of Steel Pier,] **center of Convention Hall,** Atlantic City, then proceeding in a southeasterly direction along that line for approximately 1.75 nautical miles to a point with coordinates of latitude 39 degrees [19.7] **19.4** minutes N., longitude 74 degrees [24.0] **25.1** minutes W., then from this point which is approximately 2 nautical miles offshore, the line runs parallel to the shoreline in a southwesterly direction for approximately [4.1] **2.1** nautical miles to a point with coordinates of latitude 39 degrees [17.8] **18.4** minutes N., longitude 74 degrees [28.7] **27.5** minutes W., then bearing approximately 333 degrees T (reciprocal 153 degrees T) for approximately [2.5] **1.9** nautical miles to the [water tank located at the corner of Amherst Avenue and North Gladstone Avenue, City of Margate, with coordinates of latitude 39 degrees 20.0 minutes N., longitude 74 degrees 30.2 minutes W.,] **outermost tip of the Ventnor City Fishing Pier located at the Boardwalk and South Cambridge Avenue, City of Ventnor, then along that pier to the shore** and terminating. This condemnation adjoins the closure defined in (a)26i.

iv.-vii. (No change.)

40. (No change.)

7:12-1.4 Seasonally Approved growing waters (Approved November 1 through April 30, Condemned May 1 through October 31, yearly)

(a)1.-5. (No change.)

6. Ocean City-Somers Point area—Great Egg Harbor Bay: Seasonal-Condemned May 1 through October 31, yearly; Approved November 1 through April 30, yearly:

i. [All that portion of Great Egg Harbor Inlet and Great Egg Harbor Bay contained within a line beginning at the base of the stone jetty at the end of 11th Avenue (Longport) and bearing approximately 230 degrees T to the base of the stone jetty at the end of Seaspray Road (Ocean City) and following the Ocean City bayfront in a northerly, then in a southwesterly direction across the mouth of The Lagoon and continuing on to the end of West 16th Street (Ocean City), then to Flashing Red light 16 (F1 R "16"), then along the north shore of that island to its westernmost point and southwest across an unnamed channel to the nearest point of land on Shooting Island and continuing along the north shore of Shooting Island to the range marker (Department-maintained), then bearing approximately 352 degrees T to the eastern tip of Drag Island, then along the northern shoreline in a westerly direction to the Garden State Parkway Bridge, then along the eastern side of the Garden State Parkway Bridge, across Drag Channel to the mainland, then along the mainland shoreline in an easterly direction continuing along the northern shoreline of Ship Channel, across the mouth of Bass Harbor Channel and continuing along the Ship Channel shoreline to Anchorage Point, then in a northeasterly direction (excluding the unnamed tributary) into Broad Thorofare to the base of the Route 152 bridge, then along the south side of the bridge to the opposite shoreline, then southerly along the Broad Thorofare shoreline and easterly along the Beach Thorofare shoreline to the westernmost bulkhead at 69 Sunset Boulevard West, Seaview Harbor Community, then bearing approximately 183 degrees T to the tip of the stone jetty at the end of Atlantic Avenue (Longport) then along the jetty to its base and continuing oceanward to the point of origin at the base of the stone jetty at 11th Avenue (Longport) and terminating.] **All the waters contained within a line from the base of the Ocean City-Longport Bridge in Ocean City, extending to the southern end of the bascule, then bearing approximately 250 degrees T to "RB" N buoy, then bearing approximately 227 degrees T to the northern end of the bascule on the Ocean City-Somers Point Bridge, then bearing approximately 261 degrees T to Cowpens Island and along the southern shoreline in a westerly direction to a Department-maintained marker, then bearing approximately 286 degrees T to Flashing Red light "16" (F1 R "16"), then bearing approximately 142 degrees T to the end of West 16th Street, Ocean City, then along the Ocean City shoreline in a northeasterly direction, across the mouth of The Lagoon to the point of origin at the base of the Ocean City-Longport Bridge and terminating.**

ii. [Peck Bay Area: Seasonal-Condemned May 1 through October 31, Approved November 1 through April 30, yearly: All of Peck Bay north and west of a line from the northwest tip of the unnamed island (located southwest of Shooting Island) bearing approximately 203 degrees T through Flashing Green light 37 (Fl G "37") to the Department-maintained marker on the Ocean City shoreline, then along the shoreline in a southwesterly direction to the base of the Roosevelt Boulevard Bridge, then along the northern side of the bridge to the mainland, then along the shoreline in a northerly direction to a Department-maintained marker, then bearing approximately 079 degrees T to the northwest tip of an unnamed island (immediately west of R "36"), then bearing approximately 042 degrees T to its point of origin and terminating.] **All the waters of Ship Channel contained within a line from the base of Somers Point-Ocean City Bridge in Somers Point, then along the bridge to the northern end of the bascule, then bearing approximately 056 degrees T to Flashing light "1" (Fl "1"), then bearing approximately 118 degrees T to a Department-maintained marker, then along the shoreline in a north-**

You're viewing an archived copy from the New Jersey State Library.

erly direction, then in a westerly direction across the mouth of an unnamed lagoon, continuing along the shoreline and across the mouth of Bass Harbor and on to the point of origin at the base of the Somers Point-Ocean City Bridge and terminating.

iii. All the waters of Peck Bay contained within a line from the base of the 34th Street Bridge (Ocean City) and continuing along the Ocean City shoreline in a northeasterly direction to a Department-maintained marker, then bearing approximately 325 degrees T (through N "50" buoy) to another Department-maintained marker on the mainland, then along the shoreline in a southerly direction to the base of the 34th Street Bridge and across the bridge to the point of origin and terminating.

7.-8. (No change.)

9. Delaware Bay area:

[i. Bidwell Creek: Seasonal-Condemned May 1 through October 31 yearly, Approved November 1 through April 30 yearly:

(1) All of Bidwell Creek and tributaries downstream from the easterly side of the Route 47 bridge to its confluence with the Delaware Bay;]

i.-v. (No change in text.)

[vii] **vi.** Nantuxent Cove, Back Creek and portions of Cedar Creek and Nantuxent Creek: Seasonal-Condemned May 1 through October 31, yearly, Approved November 1 through April 30, yearly:

(1) All of Nantuxent Cove north of a line beginning at the light (Fl 4 sec 36 feet 6M) located at the western tip of Nantuxent Point and bearing approximately 289 degrees T to the light (Fl 6 sec 21 feet 6M) located at the southern tip of Ben Davis Point, all of Back Creek and tributaries, including Tweed Creek, all of Nantuxent Creek lying downstream from the line described in N.J.A.C. 7:12-1.3(a)37[x(1)], and all of Cedar Creek lying downstream from the line described in N.J.A.C. 7:12-1.3(a)37[x(2)].

(a)

DIVISION OF WATER RESOURCES

Flood Plain Management
Dam Safety Standards

Proposed New Rule: N.J.A.C. 7:20-1
Proposed Repeal: N.J.A.C. 7:20 to 7:20-6

Authorized By: Robert E. Hughey, Commissioner, Department of Environmental Protection.

Authority: Safe Dam Act of 1981, N.J.S.A. 58:4-1 et seq.

DEP Docket No. 014-84-03.

Public hearings concerning this proposal will be held on the following dates:

May 8, 1984 at 7:30 P.M.
Wayne Council Chambers
475 Valley Road
Wayne, N.J.

May 10, 1984 at 10:00 A.M.
Haddonfield Municipal Building
Auditorium
292 Kings Highway
Haddonfield, N.J.

Interested persons may submit, in writing, data, views or arguments relevant to the proposal on or before May 16, 1984. These submissions and any inquiries about submissions and responses should be addressed to:

John O'Dowd
Bureau of Flood Plain Management
CN 029
Trenton, N.J. 08625

The Department of Environmental Protection thereafter may adopt the proposal without further notice (see: N.J.A.C. 1:30-3.5). The adoption becomes effective upon publication in the Register of a notice of adoption.

This proposal is known as PRN 1984-190.

The agency proposal follows:

Summary

This proposal is made to implement the Safe Dam Act, N.J.S.A. 58:4-1 et seq. The proposed new rules govern the design, construction, inspection, modification and repair of all dams in New Jersey which raise the water height by more than five feet.

The primary objective of these rules is the protection of areas below dams from the consequences of their failure. Dams and associated facilities must be maintained throughout the life of the structure, and surveillance through the years is required to detect promptly any changes in the structural integrity of the dam.

In developing these rules, consultation occurred with the Army Corps of Engineers and the Untied States Department of Agriculture, Soil Conservation Service. The original draft was prepared after discussions with experts in design, construction and management of safe dams and reservoirs.

Major factors addressed in these rules include the establishment of design criteria for construction of dams and the development of an inspection program. An additional provision of importance concerns the exemption of small impoundments, as identified in proposed N.J.A.C. 7:20-1.8, from obtaining a permit from the Department under proposed N.J.A.C. 7:20-1.3. Though exempted, spillway design for these small dams must be for 50 percent greater than a 24 hour, 100 year, Type II storm, and all necessary local approvals must be obtained. In addition, Class III agricultural ponds that drain less than one-half square mile are not required to obtain a permit from the Department if the design and construction is supervised by the United States Department of Agriculture, Soil Conservation Service.

The Department has chosen to regulate dams based upon their hazard classification, as identified in proposed N.J.A.C. 7:20-1.8. Hazard potential is broken into three classes: Class I, high hazard; Class II, significant hazard; and Class III, low hazard. The hazards pertain to potential harm to human beings or to property in areas downstream of any dam. The hazard classification dictates the level of design requirements which applicants must meet; the higher the hazard the more stringent the design criteria. For example, a high hazard structure must have the spillway design for the probable, maximum precipitation, while a low hazard structure can be designed for the 100 year storm event.

You're viewing an archived copy from the New Jersey State Library.

The existing rules in Chapter 20 (N.J.A.C. 7:20), governing the Bureau of Water Control, are being repealed since all provisions of this chapter are presently or soon to be integrated into other rules. The Bureau of Water Control has been reorganized so that the functions under existing Chapter 20 are now performed by other units of the Department. Applications for water supply (N.J.A.C. 7:20-2) are currently handled under N.J.A.C. 7:19. The rules governing the sealing of abandoned wells (formerly 7:20-3) are now found at N.J.A.C. 7:9-9. The rules governing permit applications (7:20-4) are now found in the sections dealing specifically with this type of permit, as are the provisions for submissions of reports (7:20-5). Finally, the provisions for determining flood hazard areas (7:20-6) are being proposed under the new rules implementing the Flood Hazard Area Control Act at N.J.A.C. 7:13.

Social Impact

The social impact of these rules will be favorable by protecting the public from the consequences of a dam failure and potential life and property loss. Dam owners are required to meet specific design criteria and operating standards to assure against dam failure.

Economic Impact

These rules will have a limited economic impact, but will have a favorable impact on property owners downstream of dams by insuring dams are inspected frequently and are maintained in safe operating conditions. Dam owners may bare some increase in construction and operation costs. The State of New Jersey will bare an increase in the cost of operating the regulatory unit which will enforce these rules.

Environmental Impact

These rules will prevent a dam owner from allowing dam deterioration, which could lead to dam failure or draining of the reservoir. This will insure the maintenance of existing lakes and reservoirs for recreation and wildlife development. In addition, the Department may require the submission of an Environmental Impact Statement, under proposed N.J.A.C. 7:20-1.7(f), for new dams which might have a potential negative impact on the environment. This will assist in insuring that environmental damage from the construction and operation of dams is minimized.

Full text of the rules proposed for repeal appears in the New Jersey Administrative Code at N.J.A.C. 7:20.

Full text of the proposed new rule follows.

CHAPTER 20
DAM SAFETY STANDARDS

SUBCHAPTER 1. APPLICATION PROCEDURE AND DESIGN CRITERIA FOR DAM CONSTRUCTION: DAM INSPECTION PROCEDURE

7:20-1.1 Scope and applicability

(a) The rules in this subchapter were adopted pursuant to the authority of N.J.S.A. 58:4-1 et seq., as amended by the Safe Dam Act of 1981.

1. These rules set forth procedures for application to construct a dam, as defined in N.J.A.C. 7:20-1.2, and set standards for design and maintenance of dams. These rules also establish a dam inspection procedure.

2. Any dam which raises the waters of a stream five feet or less above its usual, mean, low water height falls under the jurisdiction of the Flood Hazard Area Control Act, N.J.S.A. 58:16A-50 et seq.

7:20-1.2 Definitions

"Applicant" means any person making application for a dam permit.

"Dam" means any artificial dike, levee or other barrier, together with appurtenant works, which is constructed for the purpose of impounding water for a permanent or temporary basis that raises the water level five feet or more above the usual, mean, low water height prior to construction of the dam, during passage of the spillway design flood conditions.

"Department" means the New Jersey Department of Environmental Protection.

"Design freeboard" means the minimum freeboard which would exist during passage of the design flood.

"Division" means the Division of Water Resources in the Department of Environmental Protection.

"Environmental impact statement" means a report which describes the real and potential impacts which will or may result from the construction and operation of a proposed dam project, the adverse environmental impacts which cannot be avoided, the steps to be taken to minimize adverse impacts and the alternatives to the project with reasons for the acceptability or unacceptability.

1. The report shall address real or potential impacts upon ecology, natural resources, historical and archeological resources, recreational resources, aesthetic resources, endangered and non-game species, fisheries and any other identifiable impacts; and

2. The report shall include a listing of qualifications of those preparing the report and a reference list of pertinent published information relating to the project, the project site and the surrounding region.

"Formal inspection" means the inspection by a New Jersey licensed professional engineer to reevaluate the safety and integrity of the dam and appurtenant structures to determine if the structure meets current design criteria, including a field inspection and a review of the records on project design, construction and performance.

"Freeboard" means the vertical dimension between the crest of the embankment of a dam (without camber) and the reservoir water surface at the spillway design flood stage.

"Height-of-dam" means the vertical dimension from the lowest point in the original stream bed or natural ground surface at the downstream toe of the dam to the elevation of the top of dam.

"Informal inspection" means the visual inspection of the dam by the dam owner or operator to detect apparent signs of deterioration or other deficiencies of the dam structure or function.

"Levee" or "dike" means any artificial barrier together with appurtenant works that will divert or restrain the flow of a stream or river.

"One-hundred-year storm" means the intensity-duration combination of precipitation which produces the most severe flood runoff that may be equalled or exceeded on the average of one time in 100 years. The time duration of the 100-year storm will vary depending on the hydrologic and physiographic characteristics of a specific drainage area.

You're viewing an archived copy from the New Jersey State Library.

"Outlet" means an opening through which water can be freely discharged from a reservoir for a particular purpose.

"Owner and/or operator" means any person who owns, controls, operates, maintains, manages or proposes to construct a dam.

"Permit" or "dam permit" means all approvals required under N.J.S.A. 58:4-1 et seq. for the construction and operation of a dam.

"Person" means any individual, proprietorship, partnership, association, corporation, municipality, county or public agency.

"Pipe conduit" means any hollow tube which conveys water through a dam from a reservoir, either as a spillway or as a drain.

"Probable maximum precipitation" or "(PMP)" means the theoretically greatest depth of precipitation for a given duration that is physically possible over a particular drainage area at a certain time of year.

"Regular inspection" means the visual inspection of a dam by a New Jersey licensed professional engineer to detect any signs of deterioration in material, developing weaknesses or unsafe hydraulic or structural behavior.

"Reservoir" means any impoundment or any potential impoundment that will be created by a dam, dike or levee.

"Spillway" means a structure other than low flow outlets, over or through which flood flows are discharged.

"Spillway design flood" means the flood discharge upon which the hydraulic capacity of the spillway structure is designed.

7:20-1.3 Permit-by-rule

(a) All dams must be designed, constructed, operated and maintained in compliance with the rules in this subchapter except as set forth below:

1. Owners and operators of Class IV dams (see N.J.A.C. 7:20-1.8, Dam classification) are not required to file documents with nor obtain a permit from the Department, but must meet the following requirements, in addition to those set forth elsewhere in this subchapter:

i. Design must be based upon a spillway design flood of 50 percent greater than a 24-hour, 100-year, Type II storm; and

ii. All necessary local approvals must be obtained.

2. Owners and operators of Class III agricultural impoundments, meaning any impoundment used for livestock or crop production and maintenance, where the drainage area is less than one-half square mile in extent, must meet only the following requirements:

i. All necessary local approvals must be obtained; and

ii. Design and construction must be supervised by the United States Department of Agriculture, Soil Conservation Service.

3. Applicants for hazard classification in Class III, pursuant to N.J.A.C. 7:20-1.8, may initially submit a preliminary application, including only that information needed to establish Class III hazard classification. Thereafter, some of the documentation and inspection requirements set forth in these rules may be waived by the Department.

(b) The Department may, in its discretion, require the owner or operator of any dam subject to (a) above to obtain a permit and/or to submit any information relating to dam design, construction, operation or maintenance.

(c) The Department may, in its discretion, require the owner or operator of any dam to make modification of the design, construction or operation of the dam.

7:20-1.4 General prohibitions

(a) No person may construct or operate a new dam or modify an existing dam without first having obtained a permit from the Department, unless subject to the permit-by-rule provision in N.J.A.C. 7:20-1.3.

(b) No dam may be approved by the Department where there is an unacceptable potential for harm to human health or to human safety.

(c) Backwater created by a dam during a 100-year flood shall be contained within the applicant's property unless written consent is obtained from all potentially affected property owners. Effects on both surface and ground water shall be considered.

(d) No person may construct a dam in any waterway of this State which is a runway for migratory fish, without installing a fish ladder or other approved structure to permit the fish to pass the dam in either direction (see N.J.S.A. 23:5-29.1).

1. This provision is applicable to dams of any size.

2. The Department will determine whether a stream is currently a runway for migratory fish, during the review of the dam permit application. Applicants should consult the Division of Fish, Game and Wildlife in this matter prior to finalizing the application.

(e) Unless otherwise approved by the Department, dam construction shall commence within one year from the date of the permit and be completed within two years from the said date or the permit will become null and void.

(f) No action shall be brought against the State or the Department or its agents or employees for the recovery of damages caused by the partial or total failure of any dam or reservoir or through the operation of any dam or reservoir upon the ground that such defendant is liable by virtue of any of the following:

1. The approval of the dam or reservoir, or approval of flood handling plans during construction.

2. The issuance or enforcement of orders relative to maintenance or operation of the dam or reservoir.

3. Control, regulation and inspection of the dam or reservoir.

4. Measures taken to protect against failure during an emergency.

(g) The Department may deny any application for a dam permit, based upon its conclusion that the construction or operation of dam will cause an unacceptable threat to or impact on natural or cultural resources or the environment.

7:20-1.5 General application procedures

(a) The procedures for applying for a dam construction permit and for submitting the supporting engineering documents include the preapplication stage and the application stage, as described below. For Class III dams (see N.J.A.C. 7:20-1.8) all required information may be submitted at one time, with such detail as is appropriate to the safe design of the type of structure proposed.

(b) The applicant for a dam permit must use a New Jersey licensed professional engineer to prepare the plans and specifications and to inspect the construction.

7:20-1.6 Preapplication stage

(a) The applicant must submit a written Preliminary Report which must include the following:

1. A general description of the dam and all appurtenances thereto, and the proposed dam classification, pursuant to N.J.A.C. 7:20-1.8. The description shall include the following:

You're viewing an archived copy from the New Jersey State Library.

i. A statement of the purpose for which the dam and appurtenances are to be used; and

ii. A statement setting forth the environmental impact of the construction and operation of the facility with special regard to any potential for endangering life, health or property.

2. Maps of the area within one-half mile of the dam and impoundment boundary, showing the following:

i. The location of the proposed dam and all appurtenances, thereto;

ii. The location of all structures;

iii. The county and township;

iv. The boundary of the reservoir;

v. The location of all streets and roads;

vi. The location of all utilities, i.e. pipe lines and transmission, telegraph, and telephone lines;

vii. The topography and scale; and

viii. All other structures or facilities affected by the proposed dam, including the area downstream from the dam (State, county, and U.S.G.S. maps and aerial photographs may be used for this purpose).

3. A written report of the surficial conditions (i.e. geology, topography, and culture), based upon a field reconnaissance by the applicant's engineer;

4. Typical cross-sections of the dam, and any dike(s) and levee(s), showing proposed elevations, pool levels and top and bottom widths;

5. Logs and borings in the foundation and in the borrow areas. The results of seismic and resistivity subsurface investigations must be included where available;

6. Preliminary design data, tentative conclusions and references. The design data shall address hydrologic features such as drainage area and rainfall data, the basis for proposed dam location, the basis for the type of structure and spillway proposed and geologic and soils engineering assumptions;

7. The hydrologic design procedure and the storm durations which are used in the design;

8. All documentation and information related to determining hazard classification; and

9. Other information required by the Department.

7:20-1.7 Application stage

(a) The application shall be on forms specified and supplied by the Department and must be accompanied by two copies of the final design report and construction specifications and five sets of all plans, drawings, designs and specifications.

(b) The application shall include a Final Design Report, which must contain the following:

1. A report of the field and laboratory investigation(s) of the foundation soils and/or bedrocks, and the materials that will comprise the dam and any dikes or levees. Stability and settlement analyses and seepage and underseepage studies are required, unless the applicant can demonstrate to the satisfaction of the Department that these analyses are not necessary.

2. The bases, references, calculations and conclusions relative to hydrologic studies and design of spillway.

3. Structural and hydraulic design studies and calculations. Hydraulic and hydrologic design procedures should be used, as established by the U.S. Army Corps of Engineers, the U.S. Bureau of Reclamation, the U.S. Soil Conservation Service and other procedures universally accepted as sound engineering practice.

(c) The application must include all drawings necessary to fully describe the proposal. Drawings must be prepared in accordance with the following:

1. All drawings must be prepared by a New Jersey licensed professional engineer or land surveyor, as appropriate. Each drawing shall have a title block which meets the requirements of the State Board of Professional Engineers and Land Surveyors.

2. Drawings must clearly show the datum to which elevations shown are referred. The National Geodetic Vertical Datum of 1929 (N.G.V.D.), formerly known as the U.S. Coast & Geodetic Survey Datum, should be used wherever possible. If the N.G.V.D. datum is not used, an appropriate conversion equation must be indicated on the drawings.

3. The applicant must submit drawings showing the following information:

i. A general plan of the dam, drawn to an appropriate scale, which must show accurately the position of all essential details, such as the spillway and its point of discharge into the stream, pipes through the dam, inlets, outlets, screen chambers, gate or valve houses, head-races, the canal mill or power plant, tailraces and downstream bridges which might cause backwater on the dam;

ii. A longitudinal section of the dam and cross-section of the valley at the site of the dam, showing the elevation of the crest of the dam, the elevation of the normal and design storm flow line of the lake or reservoir, the original surface of the ground, the nature and depth of the underlying strata, the probable depth of the excavation for the foundation of the dam and for the cutoff, elevation of the restored surface of the ground, the location and elevation of all pipes or conduits passing through the dam, the core wall, if any, and the spillway structure;

iii. Typical cross sections, including a maximum section of the dam and of a spillway section which shall meet the following requirements:

(1) Cross sections must show the original surface of the ground, subsurface conditions as disclosed by test pits or borings, the probable depth of excavations for the foundation and for cutoff, the elevations of the top of the dam, the crest of the spillway and the normal flow line or water surface in the reservoir;

(2) For earth dams, the depth of stripping must be shown, as well as the position, material and dimensions of the cutoff or core wall, the width of the crest, the slopes and the nature and dimensions of the slope protection, the position and dimensions of the outlet pipes or conduits and the cutoff to prevent seepage along such structures, the disposition of different classes of embankment material if of varying composition, toe drains and clay blankets;

(3) For concrete or other composite dams, the cross sections shall show all dimensions and shall indicate the position and kinds of masonry to be included in the structure.

iv. If not clearly indicated on one or more of the drawings listed above, the following details shall be shown on additional detail sheets:

(1) Detail of spillway or overflow, showing the length and depth of opening, together with the width and shape of the crest, grade and shape of the approach and discharge channels, if any, methods of protecting the toe of the dam or end of the discharge channel from erosion and the dimensions of all walls, floors and paving;

(2) Details of the intake and outlet works, showing the location and dimensions of all valves or sluice gates, intakes, screen chambers, racks, outlet towards and gate houses and appurtenances;

(3) For reinforced concrete dams, detailed drawings must also be submitted, showing the size, spacing and arrangement of all reinforcing steel and expansion joints; and

You're viewing an archived copy from the New Jersey State Library.

(4) Special drawings shall be submitted showing any special construction features not otherwise shown, such as piling, fishways, aprons, materials used in the core wall, movable dams, tainter gates and mechanical devices.

(d) The application must include specifications, containing the following:

1. General provisions, specifying the rights, duties and responsibilities of the owner, applicant, applicant's engineer and the builder;

2. The estimated project schedule and sequence of work; and

3. Technical provisions, describing carefully and in detail the approved work methods and procedures, standards for equipment and testing, materials to be used and the results to be obtained.

(e) The applicant shall complete all investigations, including the following, prior to submission of the final design report which shall meet the following requirements:

1. The scope and the degree of precision of investigations required for a specific project shall be based on the complexities of the site, the importance of the proposed structure and the hazard created by the proposed structure.

2. The foundation investigation shall consist of borings, test pits, seizmic investigations or other subsurface explorations and must be performed so as to accurately define the soil and rock stratigraphy and the ground water conditions to the satisfaction of the Department.

3. Laboratory testing of undisturbed and remolded soil specimens and rock samples may be required by the Department.

4. The applicant must determine the nature, locations and extent of materials which are proposed for use in the structure, (e.g., borrow material, concrete aggregate, riprap stone, filter materials) and their structural properties when incorporated into the proposed structure.

5. Stability analysis and calculations for the proposed structure to ensure safety against failure due to overturning, sliding or overstressing must be submitted and approved by the Department.

6. Topographic surveys must be performed with sufficient accuracy to locate the proposed construction and to define the volume of the storage in the reservoir and the flowage limits. The upstream and downstream area must be investigated in order to delineate the area of potential damage in case of failure or flooding. Locations of baselines, centerlines and other horizontal and vertical control points must be shown on the topographic map of the site.

7. The drainage area must be accurately determined. Both present and projected future land use must be considered in determining the runoff characteristics of the drainage area. The most severe of these two conditions must be used in the design. The hydrologic assumptions and design calculations used in spillway designs shall be specified and shall include:

i. Drainage area size;

ii. Rainfall and runoff data;

iii. Reservoir inflow hydrographs;

iv. Reservoir area-capacity-elevation data;

v. Spillway elevation-discharge data; and

vi. Reservoir flood routings, except as otherwise provided in this subchapter.

(f) All applicants for Class I and II dams (see N.J.A.C. 7:20-1.8) shall prepare and submit an Emergency Action Plan which shall at least include a Dam Breach Analysis, Inundation Maps and Emergency and Evacuation Plans.

(g) The Department may require the submission of an Environmental Impact Statement, as defined in N.J.A.C. 7:20-1.2, by any applicant for a dam permit.

7:20-1.8 Dam classification

(a) The Department will use the following guidelines to classify dams according to hazard. Probable future development of the area downstream from the dam which might be affected by its failure will be considered in determining the hazard classification. The Department may, in its discretion, raise the hazard class of any proposed or existing dam.

1. Class I—High Hazard Potential: This classification includes those dams, the failure of which may cause the probable loss of life or extensive property damage.

i. The existence of normally occupied homes in the area that are susceptible to significant damage in the event of a dam failure will be assumed to mean "probable loss of life".

ii. Extensive property damage means the destructive loss of industrial or commercial facilities, essential public utilities, main highways, railroads or bridges. A dam may be classified as having a high hazard potential based solely on high projected economic loss.

iii. Recreational facilities below a dam, such as a campground or recreation area, may be sufficient reason to classify a dam as having a high hazard potential.

2. Class II—Significant Hazard Potential: This classification includes those dams, the failure of which may cause significant damage to property and project operation, but loss of human life is not envisioned. This classification applies to predominantly rural, agricultural areas, where dam failure may damage isolated homes, major highways or railroads or cause interruption of service of relatively important public utilities.

3. Class III—Low Hazard Potential: This classification includes those dams, the failure of which would cause loss of the dam itself but little or no additional damage to other property. This classification applies to rural or agricultural areas where failure may damage farm buildings other than residences, agricultural lands or non-major roads.

4. Class IV—Small Dams: This classification includes any project which impounds less than 15 acre/feet of water during the passage of the spillway design flood, has less than 10 feet height-of-dam and which has a drainage area above the dam of 100 acres or less in extent. No dam may be included in Class IV if it meets the criteria for Class I or II, but any applicant may request consideration as a Class III dam upon submission of a positive report and demonstration proving low hazard.

7:20-1.9 Design criteria

(a) The minimum design storm used to calculate required spillway capacity must be determined according to the following table:

Hazard	Spillway Design Flood (SDF)
Class I	PMP
Class II	One-half PMP
Class III	24 hour 100 year frequency, Type II storm†
Class IV	24 hour 100 year frequency, Type II storm plus 50%†

†Use of Type II Storm may be substituted by any equivalent later technology adopted by the U.S. Soil Conservation Service.

(b) All Class II and III dams shall incorporate in the proposed design necessary modifications to increase the spillway capacity of the facility or other alternative measures if the downstream hazard potential increases.

You're viewing an archived copy from the New Jersey State Library.

(c) All dams shall have a spillway system which will safely pass the design flood without endangering the safety of the dam.

(d) Each spillway shall include a satisfactory means of dissipating the energy of flow at its outlet without endangering the safety of the dam.

(e) The capacity of the spillway system shall be equal to the peak inflow of the design flood unless the applicant demonstrates by flood routing procedures that the spillway system has the capacity to safely pass the resulting water flow.

(f) Pipe conduits may be used for the primary (principal) spillway. When so used, the following requirements shall be met:

1. All pipe conduits must convey water at the maximum design velocity without damage to the interior surface;

2. The pipe conduits must be designed so that negative pressures will not occur at any point along the primary (principal) spillway system;

3. Anti-seep collars or other methods approved by the Department must be installed to control seepage along the conduit;

4. Adequate allowances shall be incorporated in the design to compensate for differential settlement and possible elongation of the pipe conduit;

5. An anti-vortex device, approved by the Department, must be installed at the intake;

6. A trash rack, approved by the Department, shall be installed at the intake to prevent clogging of the pipe conduit; and

7. A vegetated or unlined secondary (emergency) spillway, approved by the Department, shall be installed that will pass the design flood without jeopardizing the safety of the structure and that has a predicted average frequency of use less than:

i. Once in 100 years for Class I dams;

ii. Once in 50 years for Class II dams; or

iii. Once in 25 years for Class III and IV dams.

(g) Pipe conduit and spillway requirements are as follows:

1. When used for Class I and Class II dams, pipe conduits shall be of such design as to safely support the total external loads in addition to the total internal hydraulic pressure without leakage. The minimum allowable inside dimension of the pipe conduit is 30 inches. The type of construction material used must be consistent with the anticipated life of the structure.

2. When used for Class III and IV dams, pipe conduits shall be of such design as to safely support the total external loads. They must be designed to be water tight and meet the following requirements:

i. The minimum allowable inside diameter of the pipe is 18 inches for Class III dams and 12 inches for Class IV dams;

ii. If corrugated metal pipe is used, it must be close-riveted or welded, have watertight connecting bands and be of a minimum gage specified by the manufacturer as safe for a height of fill over the pipe of not less than 35 feet;

iii. If corrugated metal pipe is used, the maximum fill height over the pipe may not exceed 15 feet; and

iv. Cathodic protection for all metal pipes shall be provided.

(h) Drain requirements are as follows:

1. Except for excavated impoundments, all dams shall include a device to permit draining the reservoir, as approved by the Department.

2. Valves or sluice gates in pipe conduit drains must be installed upstream of the dam; and

3. All pipe conduits used as drains for all dam classifications shall meet the requirements of (f) and (g) above, except that the minimum allowable inside dimension may be less than 30 inches.

(i) Design references used shall be cited in the information submitted to the Department.

(j) Monitoring devices to permit inspection and assessment of the dam's condition may be required by the Department for use in the inspections during and after completion of construction.

(k) The applicant shall demonstrate to the Department that the riparian rights of downstream property owners will be protected during construction, during the period when the reservoir is being filled and during the life of the dam and reservoir.

(l) Upstream slopes of an earth dam may be no steeper than three horizontal to one vertical ratio, and downstream slopes may be no steeper than two horizontal to one vertical ratio. Measures are required for protection of upstream slopes against wave action or rapid draw-down and for protection of the downstream slope against scour or erosion due to high tailwater.

(m) Freeboard requirements are as follows:

1. Sufficient freeboard shall be provided to prevent overtopping of the dam or any dike or levee due to passage of the design flood or due to frost damage, ice damage or wave action.

2. For all dams the minimum elevation of the top of the dam must be that necessary to:

i. Pass the design flood with at least one foot of freeboard to the top of dam; or

ii. Two feet higher than the crest elevation of the secondary (emergency) spillway.

3. Where special conditions of severe frost damage, ice damage or wave action may occur, higher elevations than required in (m)2i and ii above, may be required and should be considered by the applicant.

(n) The Department may require the design and installation of any additional or modified measures by any applicant for a dam permit.

7:20-1.10 Construction

(a) Requirements relating to supervision of dam construction are as follows:

1. All applicants shall submit a written description and schedule of the proposed construction, including:

i. The estimated time to complete the construction activities, see N.J.A.C. 7:20-1.4(e);

ii. Where applicable, a description of the means by which stream flow will be diverted around or through the dam site, or otherwise kept from interfering with the work;

iii. The number of inspectors designated for quality control; and

iv. Steps to be taken to minimize erosion and sediment production during construction.

2. The extent and method of quality control must be described and approved by the Department, including an inspection schedule.

3. The drain must remain open and no water may be stored in the reservoir until the permittee demonstrates to the Department that storage of water will neither interfere with construction activities nor create a hazard to life, health or property.

You're viewing an archived copy from the New Jersey State Library.

4. The professional engineer responsible for inspecting the construction must submit progress reports to the Department at least once each month during the construction period.

5. The permittee shall promptly advise the Department of all proposed changes in the approved design, plans or specifications. There may be no change in the approved design, plans or specifications without prior approval of the Department. All approved changes must be recorded on the complete set of as-built plans, required in (a)6 below. The Department may require the submission of revised designs at any time.

6. A complete set of as-built designs, plans and specifications must be submitted to the Department upon completion of the project.

7. The professional engineer who has inspected the construction shall submit written certification that the structure has been built in conformance with the designs, plans and specifications, and with any changes approved by the Department.

(b) Construction inspection program requirements are as follows:

1. The Department may inspect the dam during construction to insure that it is being built in compliance with the designs, plans and specifications submitted to the Department. Departmental inspections in no way relieve either the permittee or the professional engineer in charge from the responsibility of providing adequate inspection of the work.

2. If, at any time during the progress of the work, the Department finds that the work is not being performed in accordance with the approved designs, plans and specifications and any approved changes, the Department will serve a written notice to that effect on the permittee or his representative. Such notice will state the particulars with which the work has not complied. Additionally, the Department may order the immediate compliance with such designs, plans, specifications, and changes and suspension of all other work until compliance has been effected. If the owner or his representative fails to comply with this order, the permit under which construction is authorized may be revoked or suspended by the Department.

3. Upon receipt of the as-built plans required in (a)6 above and the engineer's certification required in (a)7 above, the Department will inspect the completed construction within 30 days. If the Department finds that construction was completed in accordance with the approved designs, plans, specifications and approved changes, the construction will be approved in writing within 14 days. The approval date shall be the date such approval is sent by the Department.

4. In the 12th month following approval of construction by the Department pursuant to (b)3 above, the Department will make a final inspection of the construction. A final approval will be given by the Department if the final inspection shows that the terms of the permit, designs, plans, specifications and approved changes thereof have been met.

7:20-1.11 Dam operating requirements and inspections

(a) All owners and operators of Class I and II dams shall develop and use an Operational and Maintenance Manual which meets the following requirements:

1. The purpose of this manual is to provide guidance and instruction to project personnel for the proper operation and maintenance of the reservoir and dam.

2. The manual shall be composed of two parts.

i. Part one must include an introduction, project description, project authorizations, project history and list of project contracts.

ii. Part two must contain the operation and maintenance instructions for major project facilities and equipment.

(b) Permittees for Class III dams shall develop and use an Operation and Maintenance Manual in the event that the dam classification is raised.

(c) The owners or operators of dams which raise the waters of any stream more than 70 feet above its usual mean low-water height or which impounds more than 10,000 acre-feet of water shall have a regular inspection peformed annually and formal inspections performed every three years by a New Jersey licensed professional engineer. These inspections must occur in the company of an engineer assigned from the Department. In the year of the formal inspection, regular or informal inspections need not be performed.

(d) Owners or operators of all dams shall have an informal inspection performed on the off-year from the regular inspection (see (f) below).

(e) Owners or operators of dams not covered by (c) above shall have a regular inspection performed once every two years and a formal inspection performed once every six years. In the year of the formal inspection, regular and informal inspections need not be performed.

(f) All dam inspections shall be performed from March through July (Season I) or from August through December (Season II).

(g) All dam inspections shall be performed in compliance with the following schedule:

1. All dams within the counties of Sussex, Morris, Hunterdon, Union and Essex shall have regular inspections performed in Season I of the first year after the effective date of these rules. Informal inspections shall be performed in Season I of the following year.

2. All dams within the counties of Passaic, Warren, Somerset, Bergen and Hudson shall have regular inspections performed in Season II of the first year after the effective date of these rules. Informal inspections shall be performed in Season II of the following year.

3. All dams within the counties of Middlesex, Monmouth, Burlington, Salem and Atlantic shall have regular inspections performed in Season I of the second year after the effective date of these rules. Informal inspections shall be performed in Season I of the first year.

4. All dams within the counties of Mercer, Ocean, Camden, Gloucester, Cumberland, and Cape May shall have regular inspections performed in Season II of the second year after the effective date of these rules. Informal inspections shall be performed in Season II of the first year.

5. Successive regular and informal inspections shall be performed in the opposite inspection season from that of the prior inspection. For example, if a regular inspection is performed in Season I of the first year, the next regular inspection must be performed in Season II of the third year.

(h) All inspections shall be performed in compliance with the following requirements:

1. A written guide provided by the Department for the preparation of a Report on Condition of the dam shall be used for all inspections.

2. Formal and regular dam inspections shall be performed by a licensed New Jersey professional engineer. Except for Class IV dams, the required report shall be submitted to the Department by the engineer within 30 days of completion of the inspection. The report shall indicate the results of the inspection, documenting the conclusions and recommendations. Reports for Class IV dams shall be submitted to the county and/or municipal engineer having jurisdiction over the dam structure.

You're viewing an archived copy from the New Jersey State Library.

3. Except for Class IV dams, informal inspections may be performed by the dam owner or operator and the Report on Condition shall be submitted to the Department within 30 days. Reports for Class IV dams shall be submitted to the county and/or municipal engineer having jurisdiction over the dam structure.

4. The Department may extend the time for submission of the required material for up to 30 days, if the owner or operator justifies the need for such extension.

5. Failure by the permittee to inspect within the required time periods or failure to submit the Report on Condition may result in an order to drain the impoundment under the provisions of the Safe Dam Act (N.J.S.A. 58:4-1 et seq.), and/or any other remedy allowed by law.

(i) For good cause, the Department may require the owner or operator of any dam to perform an inspection of any type at any time.

(a)

COMMISSION ON RADIATION PROTECTION
BUREAU OF RADIATION PROTECTION

Medical Exposure to Ionizing Radiation by Radiologic Technologists

Proposed Amendment: N.J.A.C. 7:28-19

Authorized By: Commission on Radiation Protection, Max M. Weiss, Ph.D., Chairman.
Authority: N.J.S.A. 13:1D-7, and 26:2D-7, and specifically 26:2D-24 et seq.
DEP Docket No. 016-84-03.

Interested persons may submit in writing, data, views or arguments relevant to the proposal on or before May 16, 1984. These submissions, and any inquiries about submissions and responses, should be addressed to:

Lorraine Pullen
Office of Regulatory Services
Labor and Industry Building, Room 803
CN 402
Trenton, NJ 08625

The Department of Environmental Protection thereafter may adopt this proposal without further notice (see: N.J.A.C. 1:30-3.5). The adoption becomes effective upon publication in the Register of a notice of adoption.

This proposal is known as PRN 1984-215.

The agency proposal follows:

Summary

N.J.S.A. 26:2D-24 et seq., Radiologic Technologist Act, which became effective October 9, 1981, requires that all who practice radiologic technology within New Jersey be licensed by the Department. By requiring such license, the rules will insure that these technologists satisfy certain education requirements.

The use of radiologic technologists in limited areas of practice, i.e., dental and chest x-ray technology has increased. Therefore, it is necessary to mandate the successful completion of a prescribed curriculum as a prerequisite for admission to the licensing examination.

The technological field of radiation therapy has increased dramatically over the past 10 years, thus individuals practicing radiation therapy require additional education and training before they are admitted to the licensing examination.

Throughout the previous licensing act, N.J.S.A. 45:25-1 et seq., "certification" meant the process by which a nongovernmental agency or association granted recognition to an individual for completion of certain requirements of training and examination. Legally, State certification and licensing have the same meaning. In order to conform more closely to the nomenclature of N.J.A.C. 7:28-24, in which nuclear medicine technologists are now referred to as licensed, where formerly they were certified, all references to State certification and State certifications are being changed to State licensure, and State license, respectively.

At the time N.J.A.C. 7:28-19 was promulgated, educational criteria for each category of license was not addressed. With the advances in radiologic technology, it is necessary to develop and prescribe the completion of an educational course in the specific disciplines for which the individual is applying for admission. Therefore, the following amendments are proposed:

1. Terminology has been revised to reflect current nationally accepted criteria for radiologic technology and to be consistent with N.J.S.A. 26:2D-24.

2. Throughout this subchapter, license, licensing and licensure will be inserted in place of certificate, certifying and certification.

3. Expansion of educational requirements for a license to practice radiologic technology.

4. Successful completion of the curriculum in chest radiography or dental radiography is required prior to admission to those specific examinations.

5. Proceedings for suspension or revocation of licenses have been added in an effort to establish an enforcement procedure for complaints and/or allegations of violation of licensing requirements.

6. The procedure to be followed in the event problems occur regarding an institution's accreditation status.

7. The title, "Excessive Exposure to Ionizing Radiation", has been changed to "Medical Exposure to Ionizing Radiation by Radiologic Technologists", to more accurately reflect the nature of these rules.

Economic Impact

There should be no additional expense incurred by the Department in implementing the revisions to the subchapter since administrative and technical support is already in place and handled by the Bureau of Radiation Protection's Certification section which is a fee supported program. No economic effects are anticipated by these proposed new rules and regulations since licensing of radiologic technologists has existed in New Jersey since 1968.

Social Impact

Positive social effects are expected in providing better health care to the public by requiring separate education and credentials for Radiation Therapy Technologists, as well as successful completion of the Board's mandated curriculum

You're viewing an archived copy from the New Jersey State Library.

for chest and dental radiography prior to admission to the licensing examination.

Full text of the proposal follows (additions indicated in boldface **thus**; deletions indicated in brackets [thus]).

SUBCHAPTER 19. [EXCESSIVE EXPOSURE TO IONIZING RADIATION] **MEDICAL EXPOSURE** TO IONIZING RADIATON BY RADIOLOGIC TECHNOLOGISTS

7:28-19.1 Purpose and responsibility

(a) The purpose of these rules and regulations is to prohibit and [/or] prevent [harmful effects of] excessive and improper exposure to ionizing radiation as set forth in [N.J.S.A. 45:25-1 et seq.] **P.L. 1981, C.295, Radiologic Technologist Act, (N.J.S.A. 26:2D-24).**

(b) Any person owning, using or handling sources of [x-ray] radiation[,] directly or indirectly, shall be responsible for compliance with provisions of these rules and regulations.

7:28-19.2 Definitions

The following words and terms, when used in this subchapter, shall have the following meanings, unless the context clearly indicates otherwise.

["Chest x-ray technician" means a person, other than a licensed practitioner, who practices x-ray technology and whose application of x-rays on human beings is limited to the Thoracic area for routine diagnostic purposes. For the purposes of this definition "routine" means PA, AP, Oblique and Lateral views of the chest and shall exclude Bronchograms, Angiograms, Cardiac Catheterization procedures, Tomography and the like.

"Dental x-ray technician" means a person, other than a licensed practitioner, who practices x-ray technology and whose application of x-rays on human beings is limited to intraoral radiography for diagnostic purposes.

"Direct supervision" when applied to students during their first 12 months of training means persons qualified by Section 3.1 (Responsibility for registering) of this Chapter shall be in the Department or any other area where x-ray examinations or x-ray therapy are being provided. In the second 12 months of training, the degree of direct supervision shall conform to the curriculum guidelines and criteria established by the Board under its inspection policies.

"Student" means any person who is enrolled for any course coming under Title 45:25-1 et seq. or those rules and regulations.

"X-ray technician" means a person, other than a licensed practitioner, who uses x-rays on human beings and whose application of radiation on human beings and whose application of radiation on human beings is not limited.

"X-ray therapy technician" means a person, other than a licensed practitioner, who uses x-rays on human beings as an x-ray technician and whose application of radiation on human beings is limited to therapeutic purposes.

"X-ray technology" means the use of x-rays or x-ray producing equipment on human beings for diagnostic or therapeutic purposes under the supervision of a licensed practitioner.]

"Board" means the Radiologic Technology Board of Examiners created pursuant to N.J.S.A. 26:2D-24 et seq.

"CAHEA" means the Committee on Allied Health Education Accreditation.

"Chest x-ray technologist (LRT(C))" means a person, other than a licensed practitioner, whose practice of radiologic technology is limited to the chest area for diagnostic purposes.

"Commission" means the New Jersey Commission on Radiation Protection.

"Commissioner" means the Commissioner of the Department of Environmental Protection.

"Dental x-ray technologist (LRT (D))" means a person other than a licensed practitioner, whose practice of radiologic technology is limited to dental radiography for diagnostic purposes.

"Department" means the New Jersey Department of Environmental Protection.

"Diagnostic x-ray technologist, (LRT(R))" means a person, other than a licensed practitioner, whose application of radiation to human beings is for diagnostic purposes.

"JRC/ERT" means Joint Review Committee in Education for Radiologic Technology.

"License" means a certificate issued by the Board authorizing the licensee to operate equipment emitting ionizing radiation on human beings for diagnostic or therapeutic purposes in accordance with the provisions of this subchapter.

"Licensed practitioner" means a person licensed or otherwise authorized by law to practice medicine, dentistry, dental hygiene, podiatry, chiropody, osteopathy or chiropractic.

"Licensed Radiologic Technologist, (LRT)" means any person licensed pursuant to this subchapter.

"Radiation therapy technologist (LRT(T))" means a person, other than a licensed practitioner, whose application of radiation to human beings is for therapeutic purposes.

"Radiologic technologist" means any person who is licensed pursuant to the subchapter, which shall include Chest x-ray technologist (LRT(C)), Dental x-ray technologist (LRT(D)), Diagnostic x-ray technologist (LRT(R)), and Radiation therapy technologist (LRT(T)).

"Radiologic technology" means the use of equipment emitting ionizing radiation on human beings for diagnostic or therapeutic purposes under the supervision of a licensed practitioner.

"Student" shall mean any person who is enrolled in an approved course of study under the Radiologic Technologist Act (N.J.S.A. 26:2D-24 et seq.) or this subchapter.

"Unethical conduct" shall include, but not be limited to:

1. Engaging in the use of medical equipment emitting ionizing radiation or in the performance of any aspect of radiologic technology while in an intoxicated condition or under the influence of narcotic or any drugs which impair consciousness, judgement or behavior.

2. Willful falsification of records, or illegal destruction or theft of property or records relating to the practice of radiologic technology.

3. Failure to exercise due regard for the safety of life or health of the patient.

4. Unauthorized disclosure of information relating to a patient or his records.

5. Discrimination in the practice of radiologic technology against any individual because of race, religion, creed, color or national origin.

7:28-19.3 [Unethical conduct] **General provisions**

[(a) Unethical conduct shall include, but not be limited to:

1. Engaging in the practice of x-ray technology while in an intoxicated condition or under the influence of narcotic or any drugs which impair consciousness, judgment or behavior;

You're viewing an archived copy from the New Jersey State Library.

2. Immoral conduct while engaged in the practice of x-ray technology or immoral behavior indicating an unfitness to practice x-ray technology;

3. Willful falsification of records, or destruction or theft of property or records relating to the practice of x-ray technology;

4. Failure to exercise due regard for the safety of life or health of the patient;

5. Unauthorized disclosure of information relating to a patient or his records;

6. Discrimination in the practice of x-ray technology against any person on account of race, religion, creed, color or national origin.]

(a) The Board shall issue a license pursuant to this subchapter provided the applicant for a specific license has met all requirements as prescribed in N.J.A.C. 7:28-19.4.

(b) No person shall operate equipment emitting ionizing radiation on human beings or cause, suffer, allow or permit the use of such equipment unless it is in a manner as provided in this subchapter.

(c) No person shall operate equipment emitting ionizing radiation on human beings unless such person holds a valid license issued by the Board, pursuant to this subchapter, and unless such use is restricted to the scope of practice defined on the license.

(d) No person shall operate equipment emitting ionizing radiation on human beings unless the equipment complies with all relevant provisions of Chapter 28, Title 7 of the New Jersey Administrative Code (N.J.A.C. 7:28).

(e) The license of a radiologic technologist may be suspended for a fixed period or may be revoked, or the holder of such a license may be reprimanded or otherwise disciplined in accordance with the provisions and procedures defined in N.J.S.A. 26:2D-24 et seq. and N.J.S.A. 26:2D-57.

(f) The Board shall establish criteria and standards for programs of diagnostic, radiation therapy, dental or chest x-ray technology and approve these programs upon findings that the standards and criteria have been met.

7:28-19.4 [Use of x-ray by students] **Application for licensure**

[(a) Students enrolled in and attending a school or college of medicine, osteopathy, dentistry, podiatry, chiropractic, x-ray technology or courses sponsored by those named and approved by the New Jersey X-Ray Technican Board of Examiners may apply radiation to a human being while under the direct supervision of a licensed physician, osteopath, dentist, podiatrist, chiropractor, or certified x-ray technician, provided the school or college has been approved by the Board as maintaining a satisfactory standard.

(b) Students may apply radiation to a human being for necessary diagnostic purposes only, and only at the clinical facilities of such school or college for the purpose of clinical experience in the use of x-ray equipment. They shall not be assigned to excessive night or weekend experience, nor otherwise be required to apply radiation, except under adequate supervision and then only when they derive sufficient educational benefit from such service.

(c) Students shall not be assigned, unassisted, to night or weekend experience during their first 12 months of training. Students assigned, after 12 months of their training course, to night or weekend experience shall be under adequate supervision in accordance with the curriculum guidelines and criteria of the Board's inspection policy and shall be given compensatory time off not in conflict with scheduled class sessions.

(d) Students enrolled in an approved school of x-ray technology in New Jersey shall not be required to be in attendance at the school for more than 40 hours per week during the first 12 months including night or weekend experience. In the second 12 months of training any combination of classroom work and/or clinical experience including night and/or weekend duty shall not total more than 48 hours per week averaged over any two-week period.]

(a) The Board shall admit to examination for licensing any applicant who shall pay to the Department a nonrefundable fee established by rule of the Commission and submit satisfactory evidence, verified by oath or affirmation, that the applicant:

1. At the time of application is at least 18 years of age;

2. Is of good moral character;

3. Has successfully completed a four year course of study in a secondary school approved or recognized by the State Board of Education, or passed an approved equivalency test; and

4. Has complied with the applicable requirements of (b) below.

(b) In addition to the requirements of (a) above, any person seeking to obtain a license in a specific area of radiologic technology must comply with the following applicable requirements:

1. Each applicant for a license as a Diagnostic x-ray technologist (LRT(R)) shall have satisfactorily completed a 24-month course of study in diagnostic x-ray technology approved by the Board or its equivalent as determined by the Board.

2. Each applicant for a license as a Radiation Therapy technologist (LRT(T)) shall have satisfactorily completed a 24-month course in radiation therapy technology approved by the Board or the equivalent of such as determined by the Board.

3. Each applicant for a license as a Chest x-ray technologist (LRT(C)) shall have satisfactorily completed the basic curriculum for chest radiography as approved by the Board or its equivalent as determined by the Board.

4. Each applicant for a license as a Dental x-ray technologist (LRT(D)) shall have satisfactorily completed the curriculum for dental radiography as approved by the Board or its equivalent as determined by the Board.

(c) Each applicant for a license shall be required to pass an examination designated and approved by the Board pursuant to N.J.S.A. 26:2D-32a.

(d) The Board may accept in lieu of its own examination, a current certificate of The American Registry of Radiologic Technologists (ARRT), issued on the basis of a Registry examination satisfactory to the Board, or a certification or license as a radiologic technologist issued by another state provided that the standards are at least as stringent as those established by the Board.

(e) The Board may accept in lieu of its own examination for Dental X-Ray Technologist LRT(D):

1. A current certificate of the New Jersey Board of Dentistry issued on the basis of satisfactory completion of the certification examination given by the Certifying Board of the American Dental Assistants' Association and any education requirements as may be prescribed by the New Jersey Board of Dentistry.

2. A current certificate issued by the Certifying Board of the American Dental Assistants' Association, provided that the standards of the above are at least as stringent as those established by the Board.

You're viewing an archived copy from the New Jersey State Library.

(f) All licenses are renewable as of December 31 of every even numbered year following the year of its issuance. A license shall be renewed by the Board for a period of two years upon payment of a renewal fee in an amount to be determined by rule of the Commission, and complying with any other conditions or requirements established by the Board.

(g) Every radiologic technologist shall carry his license on his person at work. The license shall be displayed on request.

(h) An applicant who fails to pass the examination may reapply for the examination provided the applicant complies with the following:

1. Files a new application;

2. Pays the appropriate nonrefundable fee;

3. Submits the required documentation stated in (a) and (b) above; and

4. Satisfies any additional conditions or requirements set forth by the Board.

(i) Any person whose license or relicense is pending may be issued a temporary license which shall expire 90 days after the date of the next examination if the applicant is required to take it, or if the applicant does not take the examination, on the date of the examination. No more than two temporary licenses may be issued to any individual.

7:28-19.5 [Practice of X-ray technology and x-ray therapy technology]
Proceedings for suspension or revocation

[(a) The practice of x-ray technology shall include, but not be limited to, measuring and positioning patients, selecting and setting up exposure factors on x-ray equipment and making x-ray exposures. It shall not be only the developing of x-ray film, preparing developing solution, assisting patients into proper attire or onto the x-ray table or similar duties usually performed by a darkroom technician, attendant or aid.]

(NOTE: The existing text of (b) has been recodified under 7:28-19.6.)

(a) Proceedings against any licensed radiologic technologist under this section shall be instituted by filing with the Board a written charge or charges in the form of a petition under oath against such licensed radiologic technologist.

1. The charges may be preferred by any person, corporation, association or public officer, or by the Department in the first instance.

2. A copy of the charges, together with a report of such investigation as the Department shall deem proper, shall be referred to the Board for its recommendation to the Commissioner.

(b) If the Commissioner determines the matter to be a contested case, he shall designate three or more of the Board as a committee to hear and report on the charges and shall set a time and place for the hearing, or he shall refer the matter to the Office of Administrative Law for hearing before an administrative law judge, pursuant to the Administrative Procedure Act, P.L. 1968, c. 410 (c. 52:14B-1) N.J.S.A., as amended and supplemented.

(c) Upon the conclusion of the hearing, the hearing officer shall make a written report of his findings and conclusions and shall transmit them, together with his recommendation, to the Commissioner.

1. If the accused is found not guilty by the Commissioner, he shall order the charges dismissed.

2. If the accused is found guilty of the charges, the Commissioner shall, in his discretion, issue an order suspending, revoking or annulling the license or registration of the accused, or otherwise disciplining him.

(d) Where the license of any person has been revoked or annulled, under (c)2 above, the Board may after the expiration of two years accept an application for restoration of such license or registration.

7:28-19.6 [Supervision by a licensed practitioner]
Practice of radiologic technology

(NOTE: The existing text of 7:28-19.6 has been recodified under 7:28-19.7)

(a) The practice of diagnostic radiologic technology shall include: patient calibration, proper positioning for varied procedures, selecting adequate technique factors on control panel, making x-ray exposures, demonstrating anatomy as requested by physician, selecting proper distance and exercising proper principles of radiation protection.

1. It shall include all phases of diagnostic radiography.

2. It shall not include use of medical ionizing equipment for therapeutic purposes.

(b) The practice of [x-ray] **radiation** therapy technology shall include setting up the treatment position, delivering the required daily dose prescribed by the physician, certifying the record of the technical details of the treatment, selecting the required filter and treatment distance, making beam directional shells and molds, using diagnostic x-ray equipment for [tumor] localization, assisting the physicist in calibration procedure, [and] assisting in treatment planning procedures **and exercising proper principles of radiation protection**.

1. It shall not include **performing** [taking] x-ray [films] **examinations** for diagnostic purposes.

2. [X-ray] **Radiation** therapy shall be defined to include cobalt teletherapy and other forms of Gamma, Beta, or high energy teletherapy, as well as x-ray therapy.

(c) The practice of dental x-ray technology shall include application of x-rays on human beings to dental radiography for routine diagnostic purposes and exercising proper principles of radiation protection.

(d) The practice of chest x-ray technology shall include the application of x-rays on human beings restricted to the chest area, which shall be limited to posterior-anterior, anterior-posterior, oblique, lateral, decubitus and apical eardotic views of the chest for diagnostic purposes only, and exercising proper principles of radiation protection. It shall not include bronchograms, angiograms, cardiac catheterization procedures, tomography and similar procedures.

7:28-19.7 [Students] **Supervision by a licensed practitioner**

(NOTE: The existing text of 7:28-19.7 has been recodified under 7:28-19.8.)

(a) Supervision of a [certified x-ray technician] **Licensed Radiologic Technologist** by a licensed practitioner shall require that such licensed practitioner, acting within the limits specified in the laws under which the practitioner is licensed, shall determine that an x-ray exposure of a patient should be made and the part or parts of that patient's body which should be exposed, before a [certified x-ray technician] **Licensed Radiologic Technologist** may apply x-rays to a human being. Such supervision shall also require that only a licensed practitioner shall receive exposed and processed x-ray film for the purpose of diagnostic interpretation.

(b) Supervision by a licensed practitioner shall not require that a licensed practitioner oversee the [certified x-ray techni-

You're viewing an archived copy from the New Jersey State Library.

cian . . .] **Licensed Radiologic Technologist who is performing within the scope of his/her license as provided in N.J.A.C. 7:28-19.6.**

(c) Nothing in this section shall be construed to apply to students where use of [x-rays] **radiation** is governed under any previous sections of this subchapter.

7:28-19.8 [Curriculum and instruction] **Students**

[(a) The content of the curriculum shall provide for the acquisition of knowledge, skills, and attitudes as are required to qualify in the licensing examination and to assure competency for employment as an x-ray technician, chest x-ray technician, or dental x-ray technician and therapy x-ray technician.

(b) The Department shall issue and make available to all interested persons sets of "Curriculum Standards" for courses of study in x-ray technology, x-ray therapy technology, dental x-ray technology and chest x-ray technology to be used as guides in registration.

(c) The "Curriculum Standards" shall include:

1. The minimum number of theory clock-hours of classroom work which shall be devoted to each of the subjects required;

2. A description of major subject divisions, with recommended clock-hours of classroom work for each; and

3. A listing of elective subjects which may be made available to students.]

(NOTE: The existing text of (d) and (e) has been recodified under 7:28-19.9 as (p) and (q).)

(a) Candidates for admission **to an educational program approved pursuant to N.J.S.A. 26:2D-24** shall satisfy the following minimum requirements:

1. Be of good moral character; and

2. Have successfully completed a four-year course of study in a secondary school approved by the State Board of Education or passed an approved equivalency test.

(b) All candidates for admission shall be required to submit a formal application. Candidates' high school and other credentials shall be obtained prior to selection. For accepted students these shall be kept on file at the sponsoring institution.

(c) A sponsoring institution shall report in writing to the Department the name and address of each new student enrolled within 30 days and each student who has successfully completed the course of study within 30 days.

(d) A sponsoring institution shall so limit the number of students enrolled that the ratio of students to full time [certified x-ray technicians, certified x-ray therapy technicians, or certified chest x-ray technicians] **Licensed Radiologic Technologists** engaged in clinical instruction, [to] **both** diagnostic or therapeutic [units and to workload] at the clinical facilities shall be [suitable] **appropriate as determined by the Board**.

(e) All students shall be provided with a personal radiation monitoring service, such as dosimeter or badge, during their period of attendance. Student exposure to radiation shall be within the occupational limits prescribed by N.J.A.C. 7:28-6.

1. Students shall routinely be informed of their most recent exposure readings and an attempt shall be made to find the cause and prevent recurrence of exposure which is deemed to be unnecessary.

2. Students shall not be permitted to be in the primary beam to hold patients during exposure, remain unnecessarily or unprotected in the x-ray room outside the control booth during exposure, or engaged in any other practices likely to result in a continuous and/or excessive exposure to radiation.

(f) A sponsoring institution shall issue to each student who satisfactorily completes the course of study a formal certificate.

(g) A sponsoring institution shall issue to each candidate prior to admission a **currently dated** course catalog, bulletin, or other written statement, which shall describe the curriculum as a whole and the detailed course offered, list the faculty members with information regarding their qualifications, and inform each candidate of the amount and terms for payment of any tuition or other fees or expenses to be incurred. The policies relating to refund of fees, hours of attendance, vacation, holidays, absence, probation, uniforms, laundry, meals, stipends, rooms, transportation, and all requirements for satisfactory completion of the course of study shall be set forth clearly.

(h) All students shall have on them at all times while undergoing classroom or clinical [training] **education** readily identifiable uniform marking or coloration or identification name plates indicative that they are students and not [certified x-ray technicians.] **Licensed Radiologic Technologists.** Inasmuch as schools differ, a variety of identification of students [as same] will be allowed, provided, however, that each school adopt and use a standard method of student identification approved by the Board of Examiners and registered with the Board.

7:28-19.9 Program approval

(a) The program in diagnostic x-ray technology shall be at least a 24-month course or its equivalent as determined by the Board. The Board may approve a program in diagnostic x-ray technology if it complies with the standards and criteria established by the Board. The curriculum for this course may follow CAHEA standards provided that the standards are not in conflict with Board policies.

(b) Accreditation Status Categories for Radiography and Radiation Therapy Programs shall be established by the Board and distributed to each program.

(c) The program of radiation therapy technology shall be at least a 24-month course of study or its equivalent as determined by the Board. The Board may approve a program of radiation therapy technology if it complies with the standards and criteria established by the Board. The curriculum for the course may follow CAHEA standards provided that the standards are not in conflict with the Board policies.

(d) The Board shall establish criteria and standards for programs of chest radiography and dental radiography and approve such programs upon finding that the standards and criteria have been met.

(e) All applications for program approval and accreditation shall be made to the Board on forms provided by the Department.

(f) A sponsoring institution applying for program approval shall supply all data necessary for a complete evaluation of its administration organization, faculty, physical facilities, student policies, curriculum and instruction and such other information and records as the Board may require.

(g) A site inspection of a sponsoring institution and its affiliates shall be made by an appointee of the Board or employee of the Department, except the Board may, in its discretion accept approval by the Joint Review Committee (JRC/ERT) in Education for Radiologic Technology and enter into a joint agreement with JRC/ERT to perform site inspections, in lieu of a separate State inspection.

(h) The Board may grant provisional accreditation based upon an agreement by a sponsoring institution to correct specified deficiencies within a period of time agreed to by the Board.

You're viewing an archived copy from the New Jersey State Library.

1. A sponsoring institution operating under a provisional accreditation shall within 15 days notify all enrolled students via certified mail of the institution's accreditation status.

2. All future correspondence and catalogs dispensed by such institutions regarding its programs shall include a statement regarding its provisional accreditation status.

(i) Accreditation and/or Provisional accreditation may be withheld or withdrawn, for failure to correct specified deficiencies and where the Department has determined that the institution is engaging in practices that are not consistent with acceptable standards for the operation of an educational institution. The sponsoring institution shall be notified in writing of the violation or violations resulting in withholding of accreditation or of the intent to withdraw accreditation and may within 30 days of said notification, petition the Department in writing for a review thereof, and shall thereupon be given the opportunity to be heard on the violations by the Commissioner of Environmental Protection or his authorized representative.

(j) A sponsoring institution and its affiliates may be required at anytime to submit or make available to the Department such information or records as the Department requests and shall permit an authorized officer, employee or representative of the Department to perform site inspections. Failure to so perform shall be considered a violation of this section.

(k) A sponsoring institution whose accreditation has been withdrawn shall not be eligible for reaccreditation until such time as the deficiencies have been corrected.

(l) Accreditation may be withdrawn if the sponsoring institution does not have any students for a period of two successive years.

(m) A list of accredited programs and the criteria and standards as established by the Board will be available from the Department.

(n) To maintain accreditation, programs will be periodically reviewed by the Board to determine compliance with the standards and criteria as established by the Board. The Board may, at its discretion enter into agreement of settlement regarding its findings.

(o) Any violations of the standards may affect the program's accreditation status not withstanding any other remedy available to the Department.

[(d)] **(p)** The sponsoring institution shall prepare in satisfactory written form and make use of detailed curriculum, a course outline for each required subject, and adequate lesson plans for classroom instruction. These materials shall be on file at the sponsoring institution and shall be accessible to any authorized officer, employee or representative of the Department.

[(e)] **(q)** The sponsoring institution shall schedule classroom sessions in advance and give students sufficient notice thereof.

7:28-19.10 Use of medical ionizing equipment by students

(a) Students enrolled in and attending a Board approved program of radiologic technology may utilize the equipment emitting ionizing radiation on human beings for diagnostic or therapeutic purposes under the supervision of a licensed practitioner or a licensed radiologic technologist.

(b) Students enrolled in and attending a Board approved diagnostic, chest or dental radiologic technology program may apply radiation to a human being for necessary diagnostic purposes only at the approved clinical facilities of the sponsoring institutions.

1. The operation of the x-ray equipment by a student shall be for the purpose of clinical experience in radiologic procedures and shall occur under the direct supervision of a licensed radiologic technologist or a licensed practitioner.

2. Clinical supervision of the students shall be in accordance with Board policy.

(c) Students enrolled in and attending a New Jersey State approved school or college of medicine, osteopathy, dentistry, podiatry, or chiropractic may apply radiation to a human being for diagnostic purposes under the direct supervision of a licensed practitioner.

(d) Students enrolled in and attending an approved program of radiation therapy technology may apply radiation to a human being for necessary diagnostic (simulation) and therapeutic procedures at the clinical facilities of such school and college for the purpose of clinical experience in the use of radiation therapy equipment. Clinical supervision of the students shall be in accordance with Board policy.

(e) The maximum hours of clinical and academic involvement for any student enrolled in an approved school of radiation therapy technology or diagnostic x-ray technology in New Jersey shall not exceed a total of 40 hours per week.

7:28-19.11 Criteria and standards

The Board will establish criteria and standards for educational programs in each licensing category. These standards will be printed and available from the Department of Environmental Protection.

HEALTH

(a)

DIVISION OF HEALTH FACILITIES EVALUATION

Standards for Licensure of Hospital Facilities Licensure Fees

Proposed Amendments: N.J.A.C. 8:31-26.5 and 8:43B-1.7
Proposed New Rule: N.J.A.C. 8:43B-1.8

Authorized By: J. Richard Goldstein, M.D., Commissioner, Department of Health (with approval of Health Care Administration Board).

Authority: N.J.S.A. 26:2H-1 et seq., specifically 26:2H-5.

Interested persons may submit in writing, data, views or arguments relevant to the proposal on or before May 16, 1984. These submissions, and any inquiries about submissions and responses, should be addressed to:

Wanda J. Marra, Coordinator
Standards Program
Division of Health Facilities Evaluation
New Jersey Department of Health
CN 367
Trenton, NJ 08625

The Department of Health thereafter may adopt this proposal without further notice (see: N.J.A.C. 1:30-3.5). The adoption becomes effective upon publication in the Register of a notice of adoption.

You're viewing an archived copy from the New Jersey State Library.

This proposal is known as PRN 1984-202.

The agency proposal follows:

Summary

The proposed amendments, N.J.A.C. 8:31-26.5, 8:43B-1.7, and 1.8, change the fees charged by the Department for the filing of an application for licensure of a hospital facility and for the annual renewal of the license in accordance with Chapters 136 and 138, P.L. 1971, Health Care Facilities Planning Act, N.J.S.A. 26:2H-1 et seq., and amendments thereto.

The fee increase is needed in order to maintain a level of surveillance of facilities sufficient to support the effort of the Department to ensure the quality of the health care provided. The proposed amendment, N.J.A.C. 8:31-26.5, contains a technical change which excludes hospital facilities, and the proposed amendment, N.J.A.C. 8:43B-1.8, of the Manual of Standards for Hospital Facilities specifies a new fee schedule for the licensure of hospital facilities. A footnote to the proposed amendment, N.J.A.C. 8:31-26.5, clarifies the usage of the term "hospital" and indicates the location of the definition of "hospital." The proposed amendment, N.J.A.C. 8:43B-1.7, eliminates an inconsistency between the current rule, N.J.A.C. 8:43B-1.7, and the proposed amendment, N.J.A.C. 8:43B-1.8.

The proposed amendment, N.J.A.C. 8:43B-1.7, differs from the current rule, N.J.A.C. 8:43B-1.7, in that N.J.A.C. 8:43B-1.7(f) has been deleted. This deletion resolves a conflict between the current rule, N.J.A.C. 8:43B-1.7, and the intent of the proposed amendment, N.J.A.C. 8:43B-1.8. Whereas the proposed amendment, N.J.A.C. 8:43B-1.8, specifies the long-term care unit as one of the services for which a hospital shall be charged a licensure fee of $150.00, the current rule, N.J.A.C. 8:43B-1.7(f), states that the long-term care facility shall be considered an integral part of the hospital for licensure purposes. The deletion of the current rule, N.J.A.C. 8:43B-1.7(f), renders N.J.A.C. 8:43B-1 internally consistent. Approximately 13 of the 123 licensed hospitals will be affected by this deletion.

The proposed amendment, N.J.A.C. 8:43B-1.8, establishes a new fee schedule for hospitals. The proposed fee for the filing of an application for licensure and for the annual renewal of the license consists of a fixed component of $500.00 and a variable component the value of which will depend upon the number and types of services in each hospital. In contrast to the current fee, the proposed fee will not depend upon the number of beds in each hospital. The fee for each service specified in the proposed amendments, N.J.A.C. 8:43B-1.8(a)1 through 10, is $150.00. In accordance with Chapters 136 and 138, P.L. 1971, Health Care Facilities Planning Act, N.J.S.A. 26:2H-1 et seq., and amendments thereto, the proposed amendment, N.J.A.C. 8:43B-1.8(a), establishes a maximum fee of $2,000.00 for the filing of an application for licensure and for the annual renewal of the license. The Department will not charge an additional fee for medical and surgical services for both inpatients and outpatients, accident-emergency services, and support services.

A footnote to the proposed amendment, N.J.A.C. 8:43B-1.8, clarifies the intent of the amendment to include hospital facilities referred to as "satellites" in the class of hospital facilities which will be charged licensure fees in accordance with the fee schedule specified in the proposed amendment. The proposed amendment, N.J.A.C. 8:43B-1.8, ensures that all hospital facilities, including those referred to as "satellites," will be licensed on an individual basis. The Department will not distinguish between "satellite" hospital facilities and other hospital facilities with regard to the assessment of licensure fees and the issuance of licenses.

Social Impact

The surveillance of hospital facilities for compliance with regulations for licensure is an indispensable part of the Department's effort to ensure the quality of health care provided to hospital patients. An increase in the fees charged by the Department for the filing of an application for licensure of a hospital and for the annual renewal of a license is necessary, at the present time, to permit the current level of surveillance of hospitals to be maintained. Failure to maintain the present level of surveillance would compromise the health and safety of hospital patients.

The Department expects that the individual licensure of "satellites" and the specification, on the license, of the services which a particular hospital facility may provide will produce the administrative benefit of facilitating and expediting the regulatory process. Problems regarding the licensure of any particular hospital or service will be localized to a greater degree and will, therefore, be more amenable to resolution following the adoption of the proposed amendments than they presently are.

Economic Impact

An increase in licensure fees for hospitals will benefit the Department by providing funds the Department needs to execute its duties regarding the surveillance of hospital facilities. The Department currently collects hospital licensure fees which total approximately $38,000.00 per year. Given the present number of licensed hospitals, the services which they provide, and the individual licensure of "satellites," the Department expects that adoption of the proposed fee schedule will permit the annual collection of approximately $135,000.00. The increase in annual revenue will, therefore, be approximately $97,000.00.

In addition to containing higher fees than the current fee schedule, the fee schedule in the proposed amendment, N.J.A.C. 8:43B-1.8, applies to a greater number of hospital facilities. This fact is due to the inclusion of "satellite" hospital facilities among those hospitals which will be charged a licensure fee in accordance with the proposed amendment, N.J.A.C. 8:43B-1.8. This extension of applicability will result, of course, in the collection of greater revenue by the Department. Approximately 12 of the 123 licensed hospitals will be affected by this extension of applicability. The $150.00 per service fee will also contribute to the collection of higher revenue.

The Department does not expect the proposed fee schedule to be the cause of pecuniary difficulties for either the hospitals or the hospital patients. The Department contends that the charging of hospital licensure fees on the basis of the number and kinds of services provided will raise needed funds in an equitable manner.

Full text of the proposal follows (additions indicated in boldface **thus**; deletions indicated in brackets [thus]).

8:31-26.5 Licensure fees (see 14 N.J.R. 1273(a), 15 N.J.R. 336(a) for current text of this rule).

(a) The department shall charge a nonrefundable fee for the filing of an application for licensure of a health care facility and for the annual renewal of the license in accordance with the following:

You're viewing an archived copy from the New Jersey State Library.

[1. All inpatient health care facilities shall pay a fee based on the number of beds in the facility as follows:]

1. All inpatient health care facilities, except hospitals, shall pay a fee based on the number of beds in the facility as follows:

Number of Beds	Fees
1- 99	$100.00
100-199	200.00
200-299	300.00
300-399	400.00
400-999	500.00

"Hospital" is defined in N.J.A.C. 8:43B-1. Facilities referred to as "satellites" shall be included among those referred to as "hospitals" in N.J.A.C. 8:31-26.5 for the purposes of issuance of licenses and assessment of licensure fees.

2. All other health care facilities, **except hospitals**, shall pay a fee of $100.00.

(b) (No change.)

8:43B-1.7 License

(a)-(e) (No change.)

[(f) If a hospital operates a long-term care facility under the same corporate body and administration and member of the hospital's medical staff are assigned responsibility for the medical care of patients admitted in each facility, the long-term care facility shall be considered an integral part of the hospital for licensure purposes regardless of whether it is physically established as a distinct part of the hospital, as a separate structure on the hospital premises, or as a separate structure on property distant from the hospital. Only one license shall be issued to the hospital to cover each facility with the stipulation that the allocation of bed capacities not be changed except by approval of the hospital licensing board.]

8:43B-1.8 Fees

[See N.J.A.C. 8:31-26.6 for licensure fees.]

(a) The department shall charge a nonrefundable fee of $500.00 for the filing of an application for licensure of a hospital† and for the annual renewal of the license, and an additional nonrefundable fee of $150.00 for each of the following services. The total fee for the filing of an application for licensure of a hospital and for the annual renewal of the license shall not exceed $2,000.00.

1. Obstetric and newborn services;
2. Psychiatric services;
3. Pediatric services;
4. Long-term care unit;
5. Inpatient renal dialysis services;
6. Cardiac diagnostic and/or surgical services;
7. Alcohol abuse treatment services;
8. Inpatient drug abuse treatment services;
9. Intensive care unit/coronary care unit; and
10. Other services to be designated by the Department.

†"Hospital" is defined in this subchapter. Facilities referred to as "satellites" shall be included among those referred to as "hospitals" in N.J.A.C. 8:43B-1.8 for the purposes of issuance of licenses and assessment of licensure fees.

(a)

DIVISION OF HEALTH FACILITIES EVALUATION

Standards for All Health Care Facilities Reporting Information to the Board of Medical Examiners

Proposed New Rule: N.J.A.C. 8:31-26.6

Authorized By: J. Richard Goldstein, M.D., Commissioner, Department of Health (with approval of Health Care Administration Board).

Authority: N.J.S.A. 26:2H-1 et seq., specifically 26:2H-5 and P.L. 1983 C.247.

Interested persons may submit in writing, data, views or arguments relevant to the proposal on or before May 16, 1984. These submissions, and any inquiries about submissions and responses, should be addressed to:

Wanda J. Marra, Coordinator
Standards Program
Division of Health Facilities Evaluation
New Jersey Department of Health
CN 367
Trenton, NJ 08625

The Department of Health thereafter may adopt this proposal without further notice (see: N.J.A.C. 1:30-3.5). The adoption becomes effective upon publication in the Register of a notice of adoption.

This proposal is known as PRN 1984-203.

The agency proposal follows:

Summary

P.L. 1983, Chapter 247, which was approved on July 7, 1983, requires the reporting of certain information to the New Jersey State Board of Medical Examiners by health care facilities licensed pursuant to section 12 of P.L. 1971, Chapter 136 (N.J.S.A. 26:2H-12). All health care facilities shall be required to report in writing any disciplinary proceeding or action taken by the governing body against any physician or surgeon licensed by the Board when the proceeding or action results in a physician's or surgeon's reduction or suspension of privileges or removal or resignation from the medical staff, and provide such other information relating to the proceeding or action as may be requested by the Board. These requirements are included in proposed N.J.A.C. 8:31-25.6(a)1. In addition, all health care facilities shall be required to report in writing any medical malpractice liability insurance claim settlement, judgment or arbitration award to which the health care facility is a party, irrespective of any disciplinary proceeding or action taken by the governing body (see proposed N.J.A.C. 8:31-26.6(a)2).

The law assigns the Department of Health the responsibility for determining the form of written notification to the State Board of Medical Examiners. The Department of Health has determined that the information required will be reported on forms provided by the Department of Health. A committee established by the Department of Health consisting of representatives of the New Jersey Hospital Association, the Medi-

You're viewing an archived copy from the New Jersey State Library.

cal Society of New Jersey, and the New Jersey State Board of Medical Examiners agreed upon and delineated the specific information to be reported on the forms, including the following:

1. Name, professional degree, license number, and residence and/or office address of each physician or surgeon who was the subject of governing body action which resulted in the reduction or suspension of privileges, or the removal or resignation of the physician or surgeon from the medical staff, or who was involved in the medical malpractice liability insurance claim settlement, judgment or arbitration award.

2. Nature and grounds of proceedings; date(s) of precipitating event(s) and of official action taken.

3. Name, title and telephone number of facility official(s) having knowledge of the existence and location of pertinent records or persons familiar with the matter.

4. Pendency of any appeal.

5. In the event of a malpractice settlement, judgment or arbitration award, the information required in items 1 through 3 above shall be reported and a copy of the complaint, response, and settlement order, judgment or award shall be included.

6. Other information required by the Board.

The above required information is delineated in proposed N.J.A.C. 8:31-26.6(a)1i.-vi. and 2i.-vi.

The law further states that the health care facilities shall report the required information to the New Jersey State Board of Medical Examiners within 30 days of the proceeding or action, request, settlement, judgment or award. This provision is included in proposed N.J.A.C. 8:31-26.6(a). The law also states that a health care facility which fails to provide such notice or shall fail to cooperate with such request for information by the Board, shall be subject to such penalties as the Department of Health may determine pursuant to section 13 of P.L. 1971, Chapter 136 (N.J.S.A. 26:2H-13).

Social Impact

The proposed new rule will assist the State Board of Medical Examiners in monitoring the practice of medicine in the State of New Jersey. The proposed rule will augment the monitoring efforts of the State Board of Medical Examiners since the reporting will now be mandatory. This will assure greater protection of the health and safety of patients and the public since the Board will have information that might not have been reported in the past. The proposed rule will mandate a standardized system of reporting and will apply to all health care facilities, thus alleviating past inconsistencies by health care facilities in reporting pertinent information to the State Board of Medical Examiners.

In the past there has been no regulatory mechanism for the State Board of Medical Examiners to be advised of any disciplinary proceeding or action taken by the governing body against any physician or surgeon licensed by the Board when the proceeding or action results in a physician's or surgeon's reduction or suspension of privileges or removal or resignation from the medical staff and to request additional information relating to the proceeding or action. This information, if reported to the State Board of Medical Examiners, was reported by health care facilities on a voluntary basis. By mandating that health care facilities report such information to the State Board of Medical Examiners, the public will be assured of greater protection and safety.

Economic Impact

The health care facilities may realize an economic impact due to the time involved in reviewing the proceedings of the governing body, writing the information to be reported, and typing the required form. An additional impact may be due to the time involved in reviewing the credentials of the physicians and surgeons on a continuing basis, although this is the current practice in many facilities in the State.

The Department of Health will be responsible for the development, printing, and distribution of the required forms. Although the Department of Health cannot estimate at this time the number of forms that will be used, it is anticipated that the economic impact on the Department of Health will be minimal.

The State Board of Medical Examiners anticipates a definite increase in its workload with a concomitant economic impact. The Board expects an increase in the number of reports that will be submitted by health care facilities since the reporting will now be mandatory, although it is not possible at this time to estimate the increase in reporting. The economic impact upon the Board will result from reviewing the information submitted, compiling the information including requesting any additional information needed, and following through with hearings and disciplinary actions if appropriate.

The Department of Health contends that the social impact of protecting the health and safety of patients and the public outweighs any economic impact of the proposed rules.

Full text of the proposed new rule follows.

8:31-26.6 Reporting information to the State Board of Medical Examiners

(a) The facility shall establish and implement written policies and procedures for reporting to the State Board of Medical Examiners in writing on forms provided by the Department, within 30 days of the proceeding or action, request, settlement, judgment or award, information in compliance with P.L. 1983, Chapter 247.[1] The information reported shall include, but not be limited to, the following:

1. A disciplinary proceeding or action taken by the governing body against any physician or surgeon licensed by the board when the proceeding or action results in a physician's or surgeon's reduction or suspension of privileges or removal or resignation from the medical staff, including:

i. Name, professional degree, license number, and residence and/or office address of each physician or surgeon who was the subject of governing body action which resulted in the reduction or suspension of privileges, or the removal or resignation of the physician or surgeon from the medical staff;

ii. Nature and grounds of proceedings;

iii. Date(s) of precipitating event(s) and of official action taken;

iv. Name, title and telephone number of facility official(s) having knowledge of existence and location of pertinent records or persons familiar with the matter;

v. Pendency of any appeal; and

vi. Other information relating to the proceeding or action as may be requested by the Board;

2. A medical malpractice liability insurance claim settlement, judgment or arbitration award in which the facility is involved, including:

i. Name, professional degree, license number, and residence and/or office address of each physician or surgeon who

You're viewing an archived copy from the New Jersey State Library.

was involved in the medical malpractice liability insurance claim settlement, judgment or arbitration award;

ii. Nature and grounds of proceedings;

iii. Date(s) of precipitating event(s), and of official action taken;

iv. Name, title and telephone number of facility official(s) having knowledge of the existence and location of pertinent records or persons familiar with the matter;

v. A copy of the complaint, response, and settlement order, judgment or award; and

vi. Other information relating to the settlement, judgment, or arbitration award as may be required by the Board.

[1] Submit forms to the New Jersey State Board of Medical Examiners, 28 West State Street, Trenton, NJ 08608. If you have questions, you may contact the Board office at (609) 292-4843.

(a)

HEALTH PLANNING AND RESOURCES DEVELOPMENT

Certificate of Need: Reviews of Long-Term Care Facilities and Services
Temporary Expansion of Long-Term Care Bed Supply for Former Psychiatric Patients

Proposed New Rule: N.J.A.C. 8:33H-3.11

Authorized By: J. Richard Goldstein, M.D., Commissioner of Health (with approval of Health Care Administration Board).

Authority: N.J.S.A. 26:2H-1 et seq., specifically 26:2H-5b.

Interested persons may submit in writing, data, views or arguments relevant to the proposal on or before May 16, 1984. These submission, and any inquiries about submissions and responses, should be addressed to:

John A. Calabria
New Jersey Department of Health
Health Planning Services
Room 403
CN 360
Trenton, New Jersey 08625

The Department of Health thereafter may adopt this proposal without further notice (see: N.J.A.C. 1:30-3.5). The adoption becomes effective upon publication in the Register of a notice of adoption.

This proposal is known as PRN 1984-216.

The agency proposal follows:

Summary

The proposed new rules outline a process whereby existing long-term care facilities can request permission, through a waiver procedure, to temporarily exceed their licensed bed capacities without applying for a Certificate of Need. The additional beds resulting from this process must be used exclusively to care for persons presently residing in State and county psychiatric hospitals who have been determined appropriate for discharge to a long-term care facility. This temporary permission shall expire three years from the effective date of these rules. Any facility desiring to maintain these beds after this period shall be required to file a Certificate of Need and to demonstrate compliance with appropriate Departmental policy requiring long-term care facilities and beds.

The rules also outline various general criteria the Department of Health shall apply in reviewing the requests of facilities to temporarily exceed their licensed bed capacity to meet this emergency situation. These criteria will ensure that the care and safety of all patients in the facility are assured.

Social Impact

There are approximately 1,000 persons currently in State and county psychiatric hospitals who are considered in need of long-term care. Maintaining these persons in this environment is not only costly but also inappropriate to their real needs. It is the intent of these rules to facilitate the discharge of these patients to the appropriate level of care by allowing existing long-term care facilities to add up to ten beds beyond their licensed capacity to care for them. These additional beds could be maintained for a period not to exceed three years and may be added without applying for a Certificate of Need.

These rules are expected to have a positive impact on the care provided those persons currently inappropriately placed in State and county psychiatric hospitals. On the other hand, the removal of long-term care patients from these hospitals should allow for the most efficient use of costly psychiatric care services.

The rules are considered temporary because the Department expects a substantial number of the approximately 10,000 long-term care beds approved through the Certificate of Need process, but not yet constructed, to be completed and open for admissions within the next few years. However, the Department of Health, as well as the Department of Human Services, considers the situation of psychiatric hospital patients awaiting placement in long-term care facilities too serious and too expensive to delay their discharge until such new beds come on line.

Preliminary investigation by the Departments of Health and Human Services indicates approximately 30 long-term care facilities interested in providing care to these former psychiatric hospital patients. The importance of providing care to these patients has been recognized by the Statewide Health Coordinating Council, which routinely places a condition on every Certificate of Need approval for long-term care beds that seven percent of such new beds be set aside for "DPPs" or those patients in psychiatric hospitals already "discharged pending placement."

Economic Impact

It costs the State Medicaid program approximately $110.00 per day to provide care in a State or county psychiatric hospital; it costs approximately $55.00 per day to maintain a patient in a long-term care facility. The discharge of 300 patients from the State and county psychiatric hospitals into long-term care facilities will save the State Treasury over $1,000,000 per year after all operating costs and reimbursement factors are taken into account.

In addition, the Federal government has decided that the Medicaid State and county patients under consideration are,

You're viewing an archived copy from the New Jersey State Library.

in fact, not active psychiatric patients but long-term care patients. Thus, as of July 1, 1984, the Federal government will no longer allow Federal Medicaid funds to be used for reimbursement at a full-cost per diem rate necessary to cover all inclusive state and county psychiatric hospital costs. The Federal Department of Health and Human Services will only reimburse an average Intermediate Care Facility/Skilled Nursing Facility (ICF/SNF) rate, which are approximately 50 percent of the Medicaid per capita which the state presently receives at the state and county psychiatric hospitals. Thus, it will not be financially viable to continue caring for these long-term care patients in state and county psychiatric hospitals.

A facility's participation in this program of temporarily exceeding licensed bed capacity will not affect its current per diem rate as determined by the Department of Health under the CARE system—that is, patient days generated by these beds will not be included in the rate calculation for the three year period of this regulation.

Full text of the proposed new rule follows.

8:33H-3.11 Temporary expansion of long-term care bed supply for former psychiatric patients

(a) Standards for determining temporary expansion of long-term care bed supply for former psychiatric patients are as follows:

1. Standard XI-01: The process for requesting permission to temporarily exceed licensed bed capacity shall be as follows:

i. The Department of Health shall accept written requests to temporarily exceed licensed bed capacity beginning on the effective date of these rules.

ii. Each request must state the number of beds to be added, along with the floor and room numbers of the rooms where each of the beds are proposed to be located.

iii. Each request shall be sent to:

Solomon Goldberg, D.D.S., Director
Licensing, Certification and Standards
New Jersey Department of Health
CN 367
Trenton, New Jersey 08625

In addition, an informational copy of the request shall be sent to the appropriate Health Systems Agency.

iv. After receipt of the request the Department may send surveyors and inspectors from the Division of Health Facilities Evaluation to the facility to determine its ability to add beds.

v. The Department of Health also shall consult with the Department of Human Services and the Office of the Ombudsman for the Institutionalized Elderly concerning the ability of the facility to add beds and care for additional patients.

vi. Following receipt of a recommendation from the Director of Health Facilities Evaluation, the Director of Licensing, Certification and Standards shall notify each facility and appropriate Health Systems Agency of the disposition of the request.

2. Standard XI-02: Expiration of permission to temporarily exceed licensed bed capacity shall be treated as follows:

i. Permission to exceed licensed bed capacity shall not extend beyond three years from the effective date if these rules.

ii. Beds added through the process outlined in Standard XI-01 above shall not require a Certificate of Need. Such beds shall not be counted in the inventory of existing licensed beds.

iii. A facility which desires to maintain beds obtained through the process defined in Standard XI-01 above after the expiration date shall be required to request the addition of such beds through the Certificate of Need process and will be subject to the rules governing that process.

iv. The facility shall agree to retain the patients placed in the additional beds through their orderly transfer to licensed beds.

3. Standard XI-03: Maximum number of beds shall be determined as follows:

i. The maximum number of beds an individual facility may add under the process described in Standard XI-01 above shall be 10 beds or 10 percent of current total licensed capacity, whichever is less.

ii. No facility shall be granted permission to add a fifth bed in a room currently containing four beds.

iii. All beds added under Standard XI-01 shall be reserved solely for the use of Medicaid patients discharged from state and county psychiatric hospitals. Further, the beds added may not be considered toward meeting any Certificate of Need obligations already in place for former psychiatric patients.

iv. All beds added under Standard XI-01 shall be in addition to the facilities' annual average level of Medicaid beds.

v. Any beds added under Standard XI-01 shall not be included in determining a facility's compliance with Standard III-04 of these rules.

vi. Participation in this program of temporarily exceeding licensed bed capacity will not affect a facility's current per diem rate as determined under the CARE system, that is, patient days generated by these beds will not be included in the rate calculation for the duration of the three year period of this regulation.

(b) The following guidelines may be considered when adding beds:

1. Guideline XI-01: The Department of Health may consider the following physical plant factors in determining the ability of a facility to add beds:

i. Number of beds currently in the room(s) proposed for additional beds.

ii. Current square footage in the room(s) proposed for additional beds.

iii. Amount of space between and around beds if beds are added in a room.

iv. Ratio of single to multiple bed rooms.

v. Total square footage available for ancillary and support services after bed addition.

2. Guideline XI-02: The Department of Health may consider the following quality of care factors in determining the ability of a facility to add beds:

i. Current number of, as well as history of, operational licensure deficiencies in patient care areas such as nursing service, infection control, dietary, and pharmacy.

ii. Current number of, as well as history of, physical plant and life safety code deficiencies.

iii. Current number of, as well as history of, licensure deficiencies in all other areas.

3. Guideline XI-03: To the extent possible, beds shall be added to facilities in such a manner so as to place a patient as near his home county as possible.

You're viewing an archived copy from the New Jersey State Library.

(a)

DIVISION OF HEALTH FACILITIES EVALUATION

Standards for Licensure of Residential Health Care Facilities
Personal Needs Allowance

Proposed Amendment: N.J.A.C. 8:43-4.13

Authorized By: J. Richard Goldstein, M.D., Commissioner, Department of Health (with approval of Health Care Administration Board).
Authority: N.J.S.A. 26:2H-1 et seq., specifically 26:2H-5.

Interested persons may submit in writing, data, views or arguments relevant to the proposal on or before May 16, 1984. These submissions, and any inquiries about submissions and responses, should be addressed to:

Wanda J. Marra, Coordinator
Standards Program
Division of Health Facilities Evaluation
New Jersey Department of Health
CN 367
Trenton, NJ 08625

The Department of Health thereafter may adopt this proposal without further notice (see: N.J.A.C. 1:30-3.5). The adoption becomes effective upon publication in the Register of a notice of adoption.

This proposal is known as PRN 1984-204.

The agency proposal follows:

Summary

The proposed amendment provides that the owner or operator of a residential health care facility shall reserve to each Supplemental Security Income recipient and to each General Public Assistance recipient residing in the residential health care facility a personal needs allowance in an amount increased from $46.00 to at least $50.00 per month for the individual recipient. This proposed amendment is consistent with the current rule of the Department of Human Services, N.J.A.C. 10:123-3.2, as proposed at 15 N.J.R. 1735(a) and adopted at 15 N.J.R. 2172(b).

Social Impact

The personal needs allowance increase represents an equitable distribution of the Supplemental Security Income between the residents and the owners or operators of residential health care facilities to compensate for the current rate of inflation. However, there will not be any additional discernible social impact because the proposed amendment updates the existing rule on personal needs allowance to make it consistent with the rule of the Department of Human Services (N.J.A.C. 10:123-3.2) which became effective December 19, 1983.

Economic Impact

The increase in the personal needs allowance will provide additional resources to the residents for personal expenditures. There will be no negative impact on the facility owners or operators because the increase in the personal needs allowance to $50.00 is proportionate to the total January 1, 1984 Supplemental Security Income increase. There will not be any significant additional economic impact because the proposed amendment updates the existing rule on personal needs allowance to make it consistent with the rule of the Department of Human Services (N.J.A.C. 10:123-3.2) which became effective December 19, 1983.

Full text of the proposal follows (additions indicated in boldface **thus**; deletions indicated in brackets [thus]).

8:43-4.13 Personal needs allowance

(a) No licensee shall retain for his **or her** own, or require payment to him[/]**or** her of, any portion of the personal needs allowance required to be reserved for any resident pursuant to N.J.S.A. 44:7-87(h). Such personal needs allowance shall not be less than [$46.00] **$50.00 per month** unless otherwise provided by the New Jersey State Department of Human Services.

(b)-(c) (No change).

HUMAN SERVICES

(b)

DIVISION OF MEDICAL ASSISTANCE AND HEALTH SERVICES

Pharmacy Manual
Claims Requiring Special Handling

Proposed Amendment: N.J.A.C. 10:51-2.6 and 5.25

Authorized By: George J. Albanese, Commissioner, Department of Human Services.
Authority: N.J.S.A. 30:4D-6b(6), 7 and 7b, 30:4D-24.

Interested persons may submit in writing, data, views or arguments relevant to the proposal on or before May 16, 1984. These submissions and responses, should be addressed to:

Henry W. Hardy, Esq.
Administrative Practice Officer
Division of Medical Assistance
and Health Services
CN-712
Trenton, NJ 08625

At the close of the period for comments, the Department of Human Services may adopt this proposal, with any minor changes not in violation of the rule-making procedures at N.J.A.C. 1:30-3.5. Upon adoption of these rules, a notice of adoption shall be published in the Register. The adopted rules shall become effective upon publication of that notice of adoption in the Register.

This proposal is known as PRN 1984-207.

The agency proposal follows:

Summary

This proposal impacts on both the New Jersey Medicaid Program (Title XIX) and the Pharmaceutical Assistance for

You're viewing an archived copy from the New Jersey State Library.

the Aged and Disabled (PAAD) Program. The current rule requires special handling for claims whose dollar value exceeds $49.99. The proposed amendment will raise the figure to $99.99. This means that pharmaceutical providers will not have to submit claim(s) for special handling unless the claim(s) are $100.00 or greater. The objective is to reduce the amount of claims requiring special handling, which means that the claim(s) must be processed manually rather than by tape-to-tape or hard copy.

Social Impact

The amount of billing work by the pharmaceutical provider will be reduced.

There is no social impact on either the Medicaid patient or the PAAD beneficiary.

Economic Impact

There is little or no economic impact associated with this amendment, because there is no change in the pharmaceutical fee schedule. There might be some reduced mailing and handling costs for both pharmaceutical providers and New Jersey Blue Cross.

There is no cost to the Medicaid patient. PAAD beneficiaries are still required to pay the $2.00 co-payment as required by law (N.J.S.A. 30:4D-22).

Full text of the proposal follows (additions indicated in boldface **thus**; deletions indicated by brackets [thus]).

10:51-2.6 Instructions for completion of form MC-6
(a)-(d) (No change.)
(e) Mailing addresses for claims
1. (No change.)
i. (No change.)
2. Claim Return Statement and claims requiring special handling.
i. (No change.)
ii. Claims for amounts billed which exceed [$49.99] **$99.99** should be mailed to P.O. Box 549, Newark, New Jersey 07101, and envelopes should be marked "Attention: [50] **100**."
iii. (No change.)

10:51-5.25 Instructions for completion of MC-6
(a)-(c) (No change.)
(d) Mailing address for claims are as follows:
1.-2. (No change.)
3. Claims requiring special handling and Claim Return Statements.
i. Claims for amounts billed which exceed [49.99] **$99.99** should be mailed to P.O. Box 549, Newark, New Jersey 07101, and envelopes should be marked "Attention: [50] **100**."
ii. (No change.)

(a)

DIVISION OF MEDICAL ASSISTANCE AND HEALTH SERVICES

Manual for Special Hospital Services Subchapter 1. Coverage

Proposed Readoption: N.J.A.C. 10:53-1.2, 1.3, 1.5, 1.6, 1.8, 1.9, 1.11 through 1.15 Proposed Readoption with Amendments: N.J.A.C. 10:53-1.1, 1.4, 1.7, 1.10

Authorized By: George J. Albanese, Commissioner, Department of Human Services.
Authority: N.J.S.A. 30:4D-6a(1),(2),(4)(a), b(14), 7 and 7b.

Interested persons may submit in writing, data, views or arguments relevant to the proposal on or before May 16, 1984. These submissions and responses, should be addressed to:

Henry W. Hardy, Esq.
Administrative Practice Officer
Division of Medical Assistance
and Health Services
CN-712
Trenton, NJ 08625

The Department of Human Services thereafter may adopt this proposal without further notice (see N.J.A.C. 1:30-3.5). Pursuant to Executive Order No. 66(1978), this rule would otherwise expire on June 16, 1984. The readoption of the existing rule becomes effective upon filing with the Office of Administrative Law of the notice of the readoption. The concurrent amendments to the existing rule become effective upon publication in the Register of a notice of its adoption.

This proposal is known as PRN 1984-195.

The agency proposal follows:

Summary

The Manual for Special Hospital Services governs those providers who participate in the New Jersey Medicaid Program and are classified as an "approved special hospital". Because of the diversity of the services rendered by these specialized providers, they are classified as A (acute or short term), B (Rehabilitation) and C (a facility that does not qualify as A or B).

The majority of special hospitals are rehabilitation oriented, and designed to treat those patients who require intensive rehabilitation services for approximately three to twelve months following hospitalization (in an acute care general hospital). When a patient no longer requires special hospital-

You're viewing an archived copy from the New Jersey State Library.

ization, the patient is reclassified by the Division's Medical Evaluation Team, consisting of a physician, nurse, and social worker. In some instances, the patient requires skilled or intermediate nursing level care which is provided in a long term care facility.

Subchapter One, entitled Coverage, describes the basic policies and procedures governing special hospitals. Topics include covered and non-covered inpatient and outpatient hospital services, conditions of payment and coverage, benefits in an approved private psychiatric hospital, and medical day care.

An administrative review has been conducted, and a determination made that the rule should be continued. There are patients whose medical condition requires treatment and/or rehabilitation services in a specialized facility. In addition, continuation of this rule will help insure continued receipt of Federal matching funds. The rule is necessary, adequate, reasonable, efficient, and responsive to the purpose for which it was intended. The rule describes the basic policies and procedures of the Medicaid program as they pertain to special hospitals.

The rule has been amended several times. Sections 1.1 and 1.4 were amended to define "PSRO" (Professional Standards Review Organization) and their role in certifying admissions as the medical necessity (R.1981 d.51 at 13 N.J.R. 147(c)). There was an amendment defining and describing medical day care (R.1983 d.75 at 15 N.J.R. 442(a)). There were two amendments listing those elective surgical procedures that require a second opinion (R.1982 d.73 at 14 N.J.R. 278(c) and R.1982 d.459 at 14 N.J.R. 1458(c)).

The following amendments are being made as part of the proposed readoption. The definitions and conditions of payment (Sections 1.1 and 1.4) are being amended to delete the reference to the Approval by Individual Diagnosis Program, which is no longer being used, and to indicate the appropriate method of reimbursement for Class A, B and C special hospitals. Reimbursement methodologies include DRG (Diagnosis Related Groups), SHARE (Standard Hospital Accounting and Rate Evaluation) system, and CARE (Cost Accounting and Rate Evaluation) system. Section 1.7 is being amended to indicate that special hospitals will not be reimbursed for services rendered prior to the patient establishing financial eligibility for Medicaid. The definition of "speech therapist" is being deleted and will be replaced by the definition of "speech-language pathologist" to insure consistency with the hospital manual (See Section 1.10 below). The same text was recently incorporated into the Manual for Hospital Services. (See the December 19, 1983 issue of the New Jersey Register at 15 N.J.R. 2125(a). This rule was adopted as R.1984, d.47.

Social Impact

The rule impacts on those Medicaid patients whose condition require care and services in a special hospital. The rule should be continued, because the same social conditions still exist, i.e., there are patients who require intensive rehabilitation services and/or specialized hospital services.

The rule impacts on providers who have been classified as special hospitals participating in the New Jersey Medicaid program.

The rule also impacts on the New Jersey Department of Health, who is responsible for licensure of specialized and rehabilitation hospitals

Economic Impact

There is no changed economic impact directly associated with this proposal, because there is no change in the per diem rate being paid to special hospitals. The amendments to the "definitions" section only reflects the reimbursement methodology currently in effect.

The Division of Medical Assistance and Health Services spent approximately 9 million dollars (federal/state share combined) for special hospitals in 1982.

Medicaid patients are required to contribute toward the cost of their care from their available income in those instances where special hospitals are required to comply with long term care facility regulations.

Full text of the proposed readoption may be found in the New Jersey Administrative Code at N.J.A.C. 10:53-1.2, 1.3, 1.5, 1.6, 1.8, 1.9, and 1.11 through 1.15.

Full text of the proposed amendments to the readoption follows (additions indicated in boldface **thus**; deletions indicated in brackets [thus]).

SUBCHAPTER 1. COVERAGE

10:53-1.1 Definitions

The following words and terms, when used in this chapter, shall have the following meanings unless the context clearly indicates otherwise.

["Approved special hospital" means because of the wide variances of special hospitals, it is necessary to identify these by three classifications. Each hospital will be required to be listed under one of the classifications and must meet the standards as set forth to qualify as a provider. All special hospitals would be divided into the following three classifications based on standards for participation and reimbursement:]

"Approved special hospital" means a hospital that meets one of the following classifications listed below. In order to qualify as a provider in the New Jersey Medicaid Program, each special hospital must meet the appropriate standards pertaining to its classification. The three classifications, and standards for participation are:

1. Classification A (Acute or short term): may be reimbursed [on the basis of reasonable costs] if all following criteria are met:

i. Licensed as a special hospital by the State of New Jersey;

ii. Accredited by the joint Commission on Accreditation of Hospitals as a hospital;

[iii. Adoption of Approval by Individual Diagnosis (AID) program;

iv. Have departmental cost findings and RCCAC cost allocation capabilities to provide facts for rate determination;]

[v.] **iii.** Signed agreement to participate in the **New Jersey** [Health Services] **Medicaid** Program;

iv. Be reimbursed according to the SHARE (Standard Hospital Accounting and Rate Evaluation) system established by the New Jersey Department of Health and described in N.J.A.C. 8:31A, or by the DRG (Diagnosis Related Groups) system established by the New Jersey Department of Health in N.J.A.C. 8:31B.

2. Classification B. (Rehabilitation): May be reimbursed on the basis of reasonable costs if all following criteria are met:

i. Licensed as a special hospital by the State of New Jersey;

ii. Accredited by the Joint Commission on Accreditation of Hospitals as a hospital or rehabilitation facility;

iii. Adoption of utilization review as follows:

(1) Twenty-one day recertification by attending physician Active Utilization Review Committee;

(2) Prior authorization through [local medical assistance unit] **Medicaid District Office** or Medicaid's Bureau of Child

You're viewing an archived copy from the New Jersey State Library.

Health Services* for each additional 30-day period after the first 21 days, with authorizations to list expiration dates;

(3) Treatment plan required to support authorization request.

[NOTE: See N.J.A.C. 10:53-1.49(a)4i (Conditions of payment) for procedure on obtaining prior authorization.]

[iv. Have department cost findings and RCCAC cost allocation capabilities to provide facts for rate determination.]

[v.] **iv.** Signed agreement to participate in the **New Jersey** [Health Services] **Medicaid Program**;

v. Be reimbursed according to the SHARE (Standard Hospital Accounting and Rate Evaluation system established by the New Jersey Department of Health in N.J.A.C. 8:31A.

3. Classification C. (Special hospital not qualifying to meet the standards of Classification A or B.) Special hospital in this classification approved for participation in the [Health Services] **New Jersey Medicaid** Program must adhere to [skilled nursing home] **the long term care facility** policies and procedures or the Classification B special hospital regulations, for example, prior authorization for each additional 30-day period after the first 21 days. [Reimbursement is based upon a negotiated rate as determined by certified cost information furnished by the special hospital and is limited by the ceiling established for skilled nursing homes under the New Jersey Health Services Program.] **Reimbursement is based upon a rate as determined under the guidelines of the Cost Accounting and Rate Evaluation (CARE) system (see N.J.A.C. 10:63-3).** The following criteria must be met for all Class C special hospitals:

i. through iii. (No change).

....

10:53-1.4 Conditions of payment

(a) Entitlement to payment for each continuous period of hospitalization is subject to the following conditions:

1.-2. (No change.)

[3. The AID program (Approved by Individual Diagnosis) is a system whereby the initial number of days of hospitalization approved depends on the diagnosed condition for which the patient is treated. Instructions for determining number of days allowed are contained in the AID manual.]

[4. Medical recertification may be required:

i. Whenever the span of inpatient days allowed under AID is exceeded, the attending physician is required to certify the necessity of continued hospitalization on or before the expiration of the AID days. Use Inpatient Recertification form (MC-2). (See N.J.A.C. 10:53-2.10 (Inpatient recertification) for instructions.)

ii. The physician's recertification is considered approval of additional days; however, the maximum days allowed may not exceed those initially allowed under AID. Subsequent recertifications are required if hospitalization is medically necessary beyond this additional period.]

[5.] **3.** (No change.)

[6.] **4.** (No change.)

[7.] **5.** (No change.)

[8.] **6.** (No change.)

10:53-1.7 Noncovered outpatient special hospital services

(a) Approved hospital outpatient departments will not be reimbursed for any of the following:

1. Elective cosmetic surgery;
2. Private duty nursing services;
3. Services and supplies not related to patient care;
4. Research or teaching studies;
5. Services rendered prior to and after period of eligibility:

i. Outpatient services rendered prior to date of [application] **eligibility for medical assistance; and**

6. Services or items requiring prior authorization where such authorization has not been obtained or has been denied.
7. Any service, admission or item which is not medically required for the diagnosis or treatment of a disease, injury or condition;
8. Screening Services, except for:

i. Vision Screening.

9. Transportation including non-emergency ambulance.

10:53-1.10 Special hospital outpatient rehabilitation services

(a) The following words and terms, when used in this section, shall have the following meanings unless the context clearly indicates otherwise.

....

["Speech therapist" means one who is certified by the American Speech and Hearing Association, or has completed the academic requirements and is in the process of accumulating the necessary supervised work experience required for certification.]

"Speech-language pathologist" means a person who holds the certificate of clinical competence in speech-language pathology granted by the American Speech-Language Hearing Association, or who has completed the academic requirements and is in the process of accumulating the necessary supervised work experience required for certification.

(b)-(f) (No change.)

(a)

DIVISION OF MEDICAL ASSISTANCE AND HEALTH SERVICES

Manual for Physicians Services: Independent Clinic Manual
Definition of Specialist

Proposed Amendment: N.J.A.C. 10:54-1.1, 10:66-1.2
Proposed Repeal: N.J.A.C. 10:54-1.19

Authorized By: George J. Albanese, Commissioner, Department of Human Services.

Authority: N.J.S.A. 30:4D-a (5), 7 and 7b.

Interested persons may submit in writing, data, views or arguments relevant to the proposal on or before May 16, 1984. These submissions and responses, should be addressed to:

Henry W. Hardy, Esq.
Administrative Practice Officer
Division of Medical Assistance
and Health Services
CN-712
Trenton, NJ 08625

At the close of the period for comments, The Department of Human Services may adopt this proposal, with any minor

You're viewing an archived copy from the New Jersey State Library.

changes not in violation of the rule-making procedures at N.J.A.C. 1:30-3.5. Upon adoption of these rules, a notice of adoption shall be published in the Register. The adopted rules shall become effective upon publication of that notice of adoption in the Register.

This proposal is known as PRN 1984-194.

The agency proposal follows:

Summary

This proposal will remove the requirement that qualified physicians may be reimbursed as specialists only when at least 90 percent of the Medicaid practice is limited to their specialty. The proposed amendment will allow physicians who qualify as specialists to be reimbursed as specialists. Prudential Insurance Company is, and has been, responsible for reviewing the credentials of those physicians who request specialist status in the Medicaid program. If a physician is already classified as a specialist, no action is required.

The proposed text amends the "Definitions" section of both the Independent Clinic Manual and the Manual for Physicians Services, and repeals N.J.A.C. 10:54-1.19 in the latter manual because it is redundant. N.J.A.C. 10:54 1.20 through 1.23 (Manual for Physicians Services) have been renumbered as 1.19 through 1.22 respectively.

Social Impact

The rule's main impact is economic, not social. However, removal of the current restriction might enable more physicians who are qualified specialists available to treat Medicaid patients.

Economic Impact

Those physicians who qualify as specialists will be reimbursed accordingly. However, physicians must be classified as specialists by the Prudential Insurance Company, the fiscal agent who is responsible for processing physician claims for payment.

The economic impact on the Division of Medical Assistance and Health Services cannot be estimated, because the number of physicians who might qualify as specialists with the removal of the restriction is unknown.

There is no cost to the Medicaid patient for physician's services.

Full text of the proposal follows (additions indicated in boldface, **thus**; deletions indicated by brackets [thus]).

10:54-1.1 Definitions

"Specialist", for purposes of the New Jersey Medicaid Program, means a fully licensed physician [who limits his practice to his specialty and] who:

1. Is a diplomate of the appropriate American board, or osteopathic board; or

2. Is a fellow of the appropriate American specialty college, or a member of an osteopathic specialty college; or

3. Has been notified of admissibility to examination by the appropriate American board, or osteopathic board, or has evidence of completion of an appropriate qualifying residency approved by the American Medical Association, or American Osteopathic Association; or

4. Holds an active staff appointment with specialty privileges in a voluntary or governmental hospital which is approved for training in the specialty in which the physician has privileges; or

5. Is recognized in the community as a specialist by his peers.

[NOTE: For specialists as defined above to be paid at the specialist rate, 90 percent of their Medicaid practice must be limited to their specialty. Those providers who otherwise qualify as specialists, but who do not limit 90 percent of their Medicaid practice to their speciality, will be paid at the non-specialist rates, and recovery of the difference between the specialist and non-specialist rates may be sought together with any appropriate penalties if warranted.]

"Specialist in family practice or general practice", for purposes of the New Jersey Medicaid Program, means a fully licensed physician [who limits his practice to his speciality and] who is a diplomate of the **American** Board of Family Practice, [whichever applies or, a Fellow of the American Academy of Family Physicians,] or a Diplomate of the American Osteopathic Board of General Practice.

10:54-1.19 [Specialists]

[(a) For purpose of the New Jersey Health Services Program, a specialist (other than in family practice) is a fully licensed physician who limits his practice to his specialty and who:

1. Is a diplomate of the appopriate American Board or Osteopathic Board; or

2. Is a fellow of the apporpriate American Specialty College or a member of an Osteopathic Specialty College; or

3. Has been notified of admissibility to examination by the appropriate American Board, or Osteopathic Board, or has evidence of completion of an appropriate qualifying residency approved by the American Medical Association or American Osteopathic Association; or

4. Holds an active staff appointment with specialty privileges in a voluntary or governmental hospital which is approved for training in the specialty in which the physician has privileges; or

5. Is recognized in the community as a specialist by his peers.

NOTE: For specialists as defined above to be paid at the specialist rate, 90 percent of their Medicaid practice must be limited to their specialty. Those providers who otherwise qualify as a specialist, but who do not limit 90 percent of their Medicaid practice to their specialty, will be paid at the non-specialist rates, and recovery of the difference between the specialist and non-specialist rates may be sought together with any appropriate penalties if warranted.

(b) For purposes of the New Jersey Health Services Program, a specialist in family practice is a fully licensed physician who limits his practice to his specialty and who is a diplomate of the American Board of Family Practice, a Fellow of the American Academy of Family Physicians, or a Diplomate of the American Osteopathic Board of General Practice.]

10:54-1.20 through 1.23 recodified as **10:54-1.19** through **1.22**.

10:66-1.2 Definitions

"Specialist" means a fully licensed physician [who limits his practice to his speciality and] who:

1. Is a diplomate of the appropriate American board, or osteopathic board; or

2. Is a fellow of the appropriate American specialty college, or a member of an osteopathic specialty college; or

You're viewing an archived copy from the New Jersey State Library.

3. Has been notified of admissibility to examination by the appropriate American board, or osteopathic board, or has evidence of completion of an appropriate qualifying residency approved by the American Medical Association or American Osteopathic Association; or

4. Holds an active staff appointment with specialty privileges in a voluntary or governmental hospital which is approved for training in the specialty in which the physician has privileges; or

5. Is recognized in the community as a specialist by his peers.

[NOTE: For specialists as defined above to be paid at the specialist rate, 90 percent of their Medicaid practice must be limited to their specialty. Those providers who otherwise qualify as specialists, but who do not limit 90 percent of their Medicaid practice to their specialty, will be paid at the non-specialist rates, and recovery of the difference between the specialist and non-specialist rates, may be sought together with any appropriate penalities if warranted.]

"Specialist in family practice or general practice" means a fully licensed physician [who limits his practice to his specialty, and] who is a diplomate of the **American** Board of Family Practice, [whichever applies or, a Fellow of the American Academy of Family Physicians,] or a Diplomate of the American Osteopathic Board of General Practice.

(a)

DIVISION OF MEDICAL ASSISTANCE AND HEALTH SERVICES

Manual for Dental Services
Revisions to the Fee Schedule; Replacement of Dentures

Proposed Amendment: N.J.A.C. 10:56-1.1, 1.2, 1.3, 1.19, 3.3, 3.6 through 3.10, 3.12 through 3.16
Proposed New Rule: N.J.A.C. 10:56-1.23

Authorized By: George J. Albanese, Commissioner, Department of Human Services.
Authority: N.J.S.A. 30:4D-6b(4), 7 & 7b.

Interested persons may submit in writing, data, views or arguments relevant to the proposal on or before May 16, 1984. These submissions and responses, should be addressed to:

Henry W. Hardy, Esq.
Administrative Practice Officer
Division of Medical Assistance
and Health Services
CN-712
Trenton, NJ 08625

Any comments submitted are available for public review at the above address. Copies of the proposed rule are available for review at the Medicaid District Offices, or at the twenty-one County Board of Social Services.

At the close of the period for comments, the Department of Human Services may adopt this proposal, with any minor changes not in violation of the rule-making procedures at N.J.A.C. 1:30-3.5. Upon adoption of these rules, a notice of adoption shall be published in the Register. The adopted rules shall become effective upon publication of that notice of adoption in the Register.

This proposal is known as PRN 1984-225.

The agency proposal follows:

Summary

This proposal impacts on both Medicaid providers and Medicaid patients. With respect to Medicaid providers of dental services, the fee schedule is revised. The revisions include a fee increase for some procedure codes, while other codes that are used infrequently are being deleted. The specific changes in the procedure codes and corresponding fee schedules appear in various sections of subchapter 3 in the text below. These proposed amendments do not represent a major change in the basic method of reimbursement to providers of dental services, who are reimbursed on a fee-for-service basis. In essence, the proposal makes adjustments to the existing fee schedule.

The proposal also limits reimbursement for cast metal crowns to one fee. The provider will select the metal appropriate to the patient's condition.

The definition of consultation is being clarified to distinquish it from a "referral for treatment."

With respect to Medicaid patients, the time frame for replacement of dentures is being increased from five to seven and one-half years. The time frame commences after dentures have been provided by the Medicaid program or other governmental agency. Medicaid patients will still be able to have their dentures repaired, relined, or rebased, but will not receive new dentures unless there has been a major change in the patient's condition. It should be noted that dentures normally last a minimum of ten to fifteen years.

Social Impact

The impact on providers of dental services is more economic than social.

Medicaid patients who need dentures will still be able to obtain them in accordance with the usual policies and procedures, including prior authorization. Medicaid patients may have dentures repaired, rebased, or relined to make them serviceable with no time limit imposed. The proposal does extend the time for replacing existing dentures with new dentures.

Economic Impact

The estimated cost to the Medicaid program of the proposed changes is approximately $450,000 annually (State share).

The economic impact on providers will vary, depending on the number of patients being treated.

Medicaid patients are not required to pay for dental services provided by the Medicaid program.

Full text of the proposal follows (additions indicated in boldface **thus**; deletions indicated in brackets [thus]).

SUBCHAPTER 1. DENTAL SERVICES; GENERAL PROVISIONS

10:56-1.1 Definitions

The following words and terms, when used in this subchapter, shall have the following meanings unless the context clearly indicates otherwise.

You're viewing an archived copy from the New Jersey State Library.

"Attending dentist" means [:] [1. The attending dentist is considered to be the] one who assumes the primary and continuing dental care of the patient. [2.] The services of only one attending dentist will be recognized at a given time.

"Concurrent care" means that type of service rendered to **a** patient[s] by practitioners where the dictates of dental necessity requires the services of dentists of different specialties in addition to the attending dentist so that appropriate and needed care can be provided.

"Consultation" means[:] [1. A consultation is defined as] that service rendered by a qualified dentist upon request of another practitioner in order to evaluate through **personal examination of the patient,** history, appropriate physical findings and other ancillary means[;], the nature and progress of a dental or related disease, illness, or condition and/or **to** establish or confirm a diagnosis, and/or **to** determine the prognosis, and/or **to** suggest appropriate therapy. **A consultation should not be confused with "referral for treatment" when one practitioner refers a patient to another practitioner for treatment, either specific or general, that is, endodontic treatment on teeth #s 3 and 5; or extract teeth #s 7, 8, 9, and 10; or extract tooth or teeth causing pain; etc.** For additional procedures on consultation, please refer to N.J.A.C. 10:56-1.23.

[2. A consultation requires a personal examination of the patient with a written report to include, as appropriate, the information described above, a copy of which must be retained with the patient's records and must be made available, upon request, to this division or any of its authorized representatives. A copy of this report must be provided to the referring practitioner.]

[i. When the practitioner rendering the consultation services assumes the continuing car of the patient, any subsequent services rendered by him will no longer be considered as consultation.]

[ii. When consultation services are requested, the referring practitioner must include in his clinical records and on the dental form MC-10 (remarks) the name of the consulting practitioner to whom the patient is being referred. The consulting practitioner must note the name and the individual Medicaid practitioner number (IMP number) of the referring (attending) practitioner in his clinical records and on the dental form (MC-10) (referring practitioner).]

[NOTE: If there is no referring practitioner (that is, the patient makes an appointment on his own), there will be no reimbursement for consultation.]

"Dental Services" means any diagnostic, preventive, or corrective procedures administered by or under the direct personal supervision of a dentist in the practice of his profession. Such services include treatment of the teeth and associated structures of the oral cavity, and of disease, injury, or impairment which may effect the oral or general health of the individual. Such services shall maintain a high standard for quality and shall be within the reasonable limits of those services which are customarily available and provided to most persons in the community within the limitations and exclusions hereinafter specified.

NOTE: Direct personal supervision means the actual physical presence of the dentist on the premises.

"Emergency" means a specific condition of the oral cavity and/or contiguous tissues which cause severe and/or intractable pain or could compromise the life, health, or safety of the patient unless treated immediately.

For example:

1. Pain or acute infection from a restorable or a non-restorable tooth;

2. Pain resulting from injuries to the oral cavity and related structures;

3. Extensive, abnormal bleeding;

4. Fractures of the maxilla or mandible or related structures or dislocation of the mandible.

NOTE: When a case of an emergency nature arises and consultation with the attending practitioner is impossible, due consideration must be given to the preservation of those teeth that could be involved in the overall treatment plan of the attending practitioner.

"Participating dentist[s]" means[:] [1.] [A]any dentist licensed to practice dentistry by the appropriate agency of the State where the dental services are rendered, **who** accepts the policies, regulations[,] and procedures as promulgated by the New Jersey Division of Medical Assistance and Health Services, and signs a provider agreement[,]. [and is eligible to participate in the dental care aspects of the New Jersey Medicaid Program.]

"Referral" means the directing of the patient from one practitioner to another for diagnosis and/or treatment.

NOTE: If in the opinion of a dentist, the patient requires the services of a specialist, he must note the name of the practitioner to whom the patient is being referred **on the Dental Services Claim Form (MC-10)** (remarks). [and] [t]The specialist must note the name and individual Medicaid practitioner number (IMP number) of the referring dentist on the **Dental Services Claim Form** [dental form] (MC-10) (referring practitioner).

"Specialist" means[:] [1. A specialist is] one who is licensed to practice dentistry in the state where treatment is rendered, who limits his practice solely to his specialty, which is recognized by the American Dental Association.[, and who, in addition, meets one of the following condition]

(a) In addition, a specialist must meet one of the following conditions:

i. In New Jersey, and where required in other states, has obtained specialty certification from the appropriate agency of the state where dental services are to be rendered; or

ii. In those states not requiring specialty certification:

(1) Is a diplomate of the appropriate American Dental Association recognized board; or

(2) Meets the minimum requirements for that specialty as stipulated by the American Dental Association.

(b) [2.] Any provider who meets the above-cited qualifications[, who] **and** desires specialist reimbursement is required to submit written documentation to the Prudential Insurance Company, Medical Administration Division, P.O. Box 1900, Millville, New Jersey 08332. This documentation must be as follows:

i. In New Jersey, and where required in other states [-], a copy of the specialty certificate/permit issued by the appropriate agency of the state where dental services are to be rendered; or

ii. In those states not requiring specialty certification and when the practitioner is not listed in the Directory of the American Dental Association under "Character of Practice" as a specialist:

(1) From his specialty board indicating his status as a diplomate; or

(2) From the American Dental Association stipulating that he meets the minimum requirements for his specialty.

(c)[3.] Specialist reimbursement where appropriate will be limited to the following specialties.

i. Oral surgery;

ii. Endodontics;

You're viewing an archived copy from the New Jersey State Library.

iii. Pedodontics;
iv. Orthodonitcs;
vi. Periodontics;
vi. Prosthodontics.

"Transfer" means the relinquishing of responsibility for the continuing care of the patient by one dentist and the assumption of such responsibility by another dentist. Such transfers will require a new authorization where prior authorization is required.

10:56-1.2 Dental treatment plan

(a) In accordance with good dental practice, a plan of treatment, as appropriate, shall be developed and described for all patients on the [dental form] **Dental Services Claim Form** (MC-10) following an examination. If no treatment is necessary, this fact must be entered on the dental form (diagnosis).

(b) The dental treatment plan not requiring prior authorization may be reviewed by dental consultants of the New Jersey Medicaid Program to determine is appropriateness.

(c) In those instances where prior authorization is necessary, [the regional] **a** dental consultant may modify the provider's treatment plan in accordance with the guidelines of the dental aspects of the New Jersey Medicaid Program. If in the professional judgment of the provider such modification is not appropriate, he may request another review by the [regional] dental consultant. A further review [at the division's central office] **in the office of the Chief, Bureau of Dental Services** may be requested through the [regional] dental consultant.

(d) In any dental treatment plan, the dentist must discuss the proposed treatment with the patient or responsible person.

(e) Consideration for development of a dental treatment plan shall be based upon the least costly treatment fulfilling the requirements of the specific situation.

(f) Authorization for a dental treatment plan does not guarantee eligibility for payment under the New Jersey Medicaid Program. The validation form should be examined carefully on each visit to be certain the patient is currently eligible.

10:56-1.3 Prior authorization

(a) Prior authorization means approval by a dental consultant of the New Jersey Medicaid Program before a service is rendered. [(See subchapter 3 of this chapter for a listing of the appropriate dental field offices with addresses and phone numbers.)] **All dental service claim forms to request prior authorization should be submitted to:**

Division of Medical Assistance and Health Services
Dental Claims Review Unit
Building 7
Quakerbridge Plaza
Quakerbridge Road
CN-713
Trenton, New Jersey 08625
Telephone: (609) 633-7787

(b) Procedures which do not require prior authorization include:

1. Diagnostic examination with required radiography (limited to a maximum of $25.00) necessary to develop a treatment plan;

2. Emergency treatment with required radiography;

3. Adjustments to, or repair of dentures when the Medicaid reimbursement does no exceed [$34.00, nonspecialist fee or $39.00 specialist fee;] **$53.00, specialist fee or $48.00, nonspecialist fee.**

4. Routine dental services, as limited to those designated below, may be performed to the extent that they are dentally necessary:

i. Oral prophylaxis;

ii. Topical fluoride application for persons 20 years of age and under;

NOTE: This is not a covered service for persons 21 years of age and over.

iii. Restoration of carious permanent and deciduous teeth with silver amalgam, [silicate cement,] composite, or other plastic materials;

iv. Pulp capping for permanent and deciduous teeth;

v. Pulpotomy for permanent and deciduous teeth. More than one pulpotomy requires prior authorization;

vi. **Uncomplicated** extractions of non-restorable teeth;

(1) [Extraction] **Exception:** Extractions necessitating a dental prosthesis require prior authorization.

vii. All dental services other than those listed **as not requiring prior authorization** in this subsection are defined as non-routine dental services and must be authorized.

viii. No reimbursement will be made for any dental service performed beyond one year (365 days) from the date of the initial examination on that treatment plan.

(c) Procedures which require prior authorization include:

1. Treatment plans involving a combination of routine and non-routine dental services;

2. All treatment plans involving non-routine dental services;

3. Supplemental authorization:

i. Additional and/or amended services found necessary after the dental treatment plan has been authorized may be requested by recording such need on the [dental form] **Dental Services Claim Form** (MC-10). This should then be submitted for supplemental authorization together with the original treatment plan. Payment will not be made for such treatment without authorization [from the regional dental consultant in the dental field office.] **(see subsection (a).**

ii. No reimbursement will be made for any dental services performed beyond one year (365 days) from the date of the initial examination on that treatment plan.

(1) Exception: Orthodontic treatment.

10:56-1.19 Prosthodontic treatment

(a) Fixed bridges will not be authorized.

(b) Removable [rules] **denture policies** are as follow[s]:

1.-5. (No change.)

6. Partial dentures must be described on the [dental form] **Dental Services Claim Form** (MC-10), indicating material used, position of clasps and teeth to be replaced. Fee includes necessary adjustments for a six month period following insertion.

7. Payment for dentures will be denied unless all dental procedures, in both arches are completed before impressions are taken for authorized dentures.

8. Dentures will not be authorized when:

i. Dental history reveals that any or all dentures made in recent years have been unsatisfactory for reasons that are not remedial because of physiological or psychological reasons; or

ii. Dental history reveals that a denture was provided through any New Jersey State, county, or municipal agency in the [five] **seven and one-half (7½)** year period prior to the date of the current request; or

iii. Repair, relining, or rebasing (jumping) of the patient's present denture will make it servicable.

You're viewing an archived copy from the New Jersey State Library.

9. Dental relining, rebasing (jumping) or repairing (other than as noted in this section) are reimbursable.

i. The fee will include all necessary adjustments for a six month period following insertion for relining and rebasing and three months for repairs.

10. The patient's name (first and last names or where space is a factor, first initial and last name) must be processed into all dentures during the original fabrication or where possible during any subsequent processing procedure (repair, reline, rebase, and so forth). The social security number should also be included if space permits.

10:56-1.23 Consultations

(a) Consultations are subject to the following conditions:

1. A written report must be provided to the referring practitioner which includes diagnosis and recommendations for future management. A copy must be retained with the patient's records and must be available, upon request, to the New Jersey Medicaid Program or any of its authorized representatives.

i. When the practitioner rendering the consultation services assumes the continuing care of the patient, any subsequent services rendered by him will no longer be considered as consultation.

ii. When consultation services are requested, the referring practitioner must include in his clinical records and on the Dental Services Claim Form MC-10 (remarks) the name of the consulting practitioner to whom the patient is being referred. The consulting practitioner must note the name and the individual Medicaid practitioner number (IMP number) of the referring (attending) practitioner in his clinical records and on the Dental Services Claim Form (MC-10) (referring practitioner).

iii. A consultation will be disallowed if there is no referring practitioner, that is, the patient makes an appointment on his own.

iv. A consultation will be disallowed if performed on the same recipient by the same practitioner, members of the same group, members of a shared health care facility, or practitioners sharing a common record within a 12 month span of a prior claim for the same or related disease, illness or condition.

v. A consultation will be declined in any setting, if the consultation occurs between members of the same group, shared health care facility, or practitioners sharing common records.

vi. If a consultation is billed in an inpatient setting and the patient is then transferred to the service of the consultant, the consultant may not bill for a Hospital Day — Initial; however, Hospital Day — Subsequent — may be billed for visits on ensuing days.

vii. If a consultation is billed in an Emergency Room setting and the patient is then admitted to the consultant's service as a hospital inpatient, future visits of the consultant may be billed as a Hospital Day — Subsequent. If the patient is admitted to another practitioner's service, that practitioner may bill for Hospital Day — Initial. Future visits of the consultant for that inpatient hospitalization may be billed as a Hospital Day — Subsequent — and be considered as concurrent care IF concurrent care can be justified as dentally/medically necessary.

10:56-3.3 Clinical oral examination

(a) Procedure code 0110, [c]Comprehensive clinical oral examination has a maximum allowance of $7.00,S, and $6.00,NS:

1. This requires a thorough observation of all conditions present in the oral cavity and contiguous structures to include:

i. Charting of all abnormalities;

ii. Diagnosis; and

iii. Development of a complete treatment plan to be recorded in its entirety on the [dental forms(s).] **Dental Services Claim Form (MC-10).**

2. For reimbursement of the examination:

i. A comprehensive clinical oral examination shall be limited to once every six months for those patients through age 17, and once every 12 months for those patients 18 years of age or older except as authorized by a Dental Consultant of the New Jersey Medicaid Program.

ii. All items on the Dental Services Claim Form (MC-10) must be completed;

iii. If no treatment is indicated, this fact must be noted on the Dental **Services** Claim Form (MC-10) in the diagnosis box.

(b) Procedure code d0130, Emergency clinical oral examination[,] (for diagnosis and/or observation of a specific complaint — [(]make note of diagnosis and/or observations on [dental form] **Dental Services Claim Form** (MC-10)) has a maximum allowance of $4.00, S, and $3.00, NS, and is not reimbursable as an adjunct to any reimbursable service (exception: diagnostic [x-rays] **radiographs).**

(c) Procedure Code 0140, Orthodontic Assessment **Examination,** using the Handicapping Malocclusion Assessment System has a maximum allowance of $6.00, S, and $5.00, NS. The **Orthodontic** Assessment Form (FD-10) must accompany the Dental **Services** Claim Form (MC-10) when requesting reimbursement.

1. Reimbursement is limited to the provider or provider group who does such an examination with the intention of personally providing any orthodontic treatment necessary.

[1.] **2.** Reimbursement **is** limited to once every 12 months unless authorized.

3. The Orthodontic Assessment Examination is not reimbursable for individuals age 20 or older.

10:56-3.5 Miscellaneous diagnostic procedures

(a) Biopsy — see codes number 7285 and 7286

(b) Procedure code *0470, Diagnostic casts, has a maximum allowance of [8.00] **$11.50,** S, per cast and [$7.00] **$10.00,** NS, per cast. Casts must have bases and be trimmed to permit articulation.

(c) Procedure code *0471, Diagnostic photographs or slides, has a maximum allowance of $1.00, S, per view and $1.00, NS per view.

(d) *0999 — Unspecified Diagnostic Procedure. Complete description of procedure and why. IC

10:56-3.6 Dental prophylaxis

(a) Dental prophylaxis is the removal of calculus and stains from the [exposed] **supraginival** and [unexposed] **subginival** surfaces of the teeth by scaling and polishing.

1. For reimbursement purposes, dental prophylaxis shall be limited to once every six months for those patients through age 17 and once every 12 months for those patients 18 years of age or older except as authorized by a Dental Consultant of the Medicaid Program.

i. Procedure code 1110, Patient over 15 years of age, maxillary and mandibular arches, has a maximum allowance of $11.00, S, and $10.00, NS.

ii. Procedure 1111, Patients over 15 years of age, maxillary or mandibular arch (code to be used if patient is edentulous in opposing arch) has a maximum allowance of $5.50, S, and $5.00, NS.

You're viewing an archived copy from the New Jersey State Library.

iii. Procedure 1120, Patients up to and including 15 years of age, maxillary and mandibular arches has a maximum allowance of $800, S, and $7.00, NS.

(b) Scaling over and above that necessary under prophylaxis **(see (a) above)**, the calculus must be abnormal and visible to the Dental Consultant on [X-ray] **radiograph**(s). Such scaling must be authorized.

1. Procedure code *1150, Patients over 15 years of age, maxillary and mandibular arches has a maximum allowance of $11.00, S, and $10.00, NS.

2. Procedure code *1151, Patients over 15 years of age, maxillary or mandibular arch (code to be used if patient is edentulous in opposing arch), has a maximum allowance of $5.50, S, and $5.00, NS.

10:56-3.7 Fluoride treatment —including prophylaxis

(a) Topical application of stannous fluoride or acid fluoride phosphate — one treatment following a complete prophylaxis (fee includes both services).

1. Reimbursement for topical fluoride treatment shall be limited to once every six months without authorization for those patients through age 17 and once every 12 months for those patients 18 years of age up to and including 20 years of age. (Not a **covered** service for persons 21 years of age and over). A complete prophylaxis must be performed **immediately** prior to the topical fluoride treatment.

2. Procedure code 1235, Patients over 15, up to and including 20 years of age, maxillary and mandibular arches has a maximum allowance of $17.00, S, and $15.00, NS.

3. Procedure code, 1236, Patients over 15, up to and including 20 years of age, maxillary or mandibular arch (code to be used if patient is edentulous in opposing arch), has a maximum allowance of $8.50, S, and $7.50, NS.

4. Procedure code 1245, Patients up to and including 15 years of age, maxillary and mandibular arches, has a maximum allowance of $14.00, S, and $12.00, NS.

10:56-3.8 Other preventive services

(a) Procedure codes and maximum allowance for space maintainers is as follows:

*1510	Fixed, unilateral, band type	$40.00	$35.00
*1515	Fixed, unilateral, stainless steel crown type (one crown)	53.00	46.00
*1520	Fixed, linqual or palatal arch, band type	61.00	53.00
*1522	Fixed, lingual or palatal arch, stainless steel crown type	93.00	81.00
*1524	Tooth processed to arch bar (wire) each tooth	6.00	5.00
*1525	Removable, bilateral type	69.00	60.00
[*]1550	Recementation of space maintainer	7.00	6.00
*1999	Unspecified Preventive Procedure	IC	IC
	Complete description of procedues and why		

10:56-3.9 Restorations

(a) For restoration, the fee will include lining or base, restoration, polishing of restoration and local anesthesia, or analgesia. Reimbursement for restorations in deciduous teeth is limited to deciduous cuspids and molars of children up to and including age nine or in deciduous incisors up to and including age five but not where exfoliation is imminent. Prior authorization by a dental consultant is required above age limits.

(b) Amalgam restorations are reimbursable only when silver amalgam is utilized for restoration of posterior teeth. Exception: Prior authorization by a dental consultant.

1. Procedure code must be selected on the basis of the number of surfaces restored per individual tooth (not on the basis of individual fillings), therefore, the fee for any surface will include one or more restorations on that surface.

2. Only one code is reimbursable per tooth.

3. Reimbursement for an occlusal restoration includes any extensions onto the occlusal one-third of the buccal or lingual surface(s) of the tooth.

4. The following are procedure codes and maximum allowances:

2110	One surface-deciduous	[7.00]	**9.00**	[6.00]	**7.50**
2120	Two surfaces-deciduous	[13.00]	**14.50**	[12.00]	**13.00**
2130	Three surfaces-deciduous	[18.00]	**20.00**	[17.00]	**18.50**
2131	Four (or more) surfaces-deciduous	[21.00]	**25.50**	[20.00]	**24.00**
2140	One surface — permanent	[7.00]	**9.00**	[6.00]	**7.50**
2150	Two surfaces — permanent	[13.00]	**14.50**	[12.00]	**13.00**
2160	Three surfaces — permanent	[18.00]	**20.00**	[17.00)	**18.50**
2161	Four (or more) surfaces—permanent	[21.00]	**25.50**	[20.00]	**24.00**

(c) For [silicate,] acrylic, plastic or composite restorations, reimbursement will only be made when [silicate cement,] composite, plastic, or acrylic filling material is utilized for the six anterior teeth in each arch. (Teeth numbers 6 through 11 and 22 through 27 and/or C. through H. and M. through R).

1. Exceptions:

i. Composite restorations may be provided on the mesial, occlusal and buccal surfaces of the first bicuspids; however, the distal surface may also be provided but only in conjunction with the mesial and occlusal surfaces; or

ii. When so authorized by the dental consultant.

2. When access to an inter-proximal cavity is gained by involvement of a second surface, reimbursement will be permitted for only one restoration.

3. Only one code is reimbursable per tooth.

4. **Fee will include Acid Etch where appropriate.**

[(d) Silicate restorations procedure codes and maximum allowances are as follows:

2216	One restoration, per tooth (class III or class V)	$ 8.00	$7.00
2217	Two restorations, per tooth (class II and/or class V)	14.00	13.00
2281	Three or more restorations, per tooth (class III and class V)]	19.00	18.00

[(e)]**(d)** Acrylic, plastic or composite restorations (Anterior teeth): procedure codes and maximum allowances are as follows:

2320	One restoration per tooth (class III or class V)	$ [9.00]	**11.00**	$ [8.00]	**10.00**
2321	Two restorations per tooth (class III and/or class V)	[15.00]	**18.00**	[14.00]	**16.00**
2322	Three or more restorations per tooth, (class III and/or class V)	[21.00]	**25.00**	[20.00]	**22.00**
2323	One restoration per tooth (class IV)	[15.00]	**20.00**	[14.00]	**18.00**
2324	Two restorations per tooth (class IV)	[25.00]	**31.50**	[23.00]	**28.00**
2325	Two restorations per tooth (One class IV plus one class III or class V)	[21.00]	**28.00**	[20.00]	**25.00**
2326	Three or more restorations per tooth (One class IV plus additional class III, IV, or V(s))	[25.00]	**31.50**	[23.00]	**28.00**

[(f)] **(e)** Composite restorations (Posterior teeth; first bicuspids only) procedure codes and maximum allowances are as follows:

You're viewing an archived copy from the New Jersey State Library.

2351	One surface	$[9.00]	**11.00**	$[8.00]	**10.00**
2352	Two surfaces	[15.00]	**18.00**	[14.00]	**16.00**
2353	Three or more surfaces	[21.00]	**25.00**	[20.00]	**22.00**

[(g)] **(f)** Gold foil restoration (Primarily for use in dental colleges): procedure codes and maximum allowance are as follows:

*2410	One surface	$ 9.00	$ 8.00
*2420	Two surfaces	18.00	16.00
*2430	Three or more surface	27.00	24.00

[(h)] **(g)** Gold inlay restorations (Primarily for use in dental colleges): procedure codes and maximum allowances are as follows:

*2510	One surface	$31.00	$27.00
*2520	Two surfaces	56.00	49.00
*2530	Three or more surfaces	75.00	65.00
*2540	Onlay, per tooth (in addition to above)	23.00	20.00

[(i)] **(h)** Authorization for crowns will be granted only when substantial loss of tooth structure exists and condition of remaining teeth and supporting tissues justify this treatment.

1. Acrylic or porcelain veneer [or] **on** metal will be authorized only when esthetically necessary.,

2. Procedure codes and maximum allowances are as follows:

*2710	Plastic (acrylic or vinyl) (Laboratory processed)	$[86.00]	**98.00**	$[75.00]	**85.00**
*2711	Polycarbonate — prefabricated — generally authorized only for deciduous and permanent anterior teeth (up to and including 15 years of age).	[35.00]	**40.00**	[30.00]	**35.00**
[*2720	Plastic processed to gold (acrylic or vinyl veneer)	144.00		$125.00	
*2722	Plastic processed to semi-precious metal]	132.00		115.00	
***2721**	**Plastic processed to cast metal substrate**	**161.00**		**140.00**	
[*2750	Porcelain fused to gold	161.00		140.00	
*2752	Porcelain fused to semi-precious metal]	150.00		130.00	
2751	**Porcelain fused to cast metal substrate**	**201.00**		**175.00**	
[*2790	Gold (full cast)	127.00		110.00	
*2792	Semi-precious metal (full cast)]	115.00		100.00	
2791	**Full cast crown**	**161.00**		**140.00**	
[*2810	Gold (¾ cast)	81.00		70.00]	
*2830	Stainless steel — generally authorized only for deciduous teeth and permanent posterior teeth up to and including 17 years of age).	[35.00]	**41.00**	[30.00]	**35.00**
*2840	Temporary acrylic (quick cure) for fractured tooth not in conjunction with any other restorative procedure on same tooth	[23.00]	**29.00**	[20.00]	**25.00**
*2891	Cast post and core-independent of crown-in addition to crown	$ 52.00		$45.00	
*2892	Preformed dowel or post and built up core of composite or amalgam - in addition to crown	34.00		30.00	
*2893	Prefabricated post and core — in addition to crown	34.00		30.00	
*2894	Preformed dowel or post	14.00		14.00	
*2895	Preformed dowel or post including cementation	21.00		20.00	
*2896	Built up core of composite or amalgam in conjunction with codes 2951, 2952, or 2953.	[12.00]	**17.00**	[10.00]	**15.00**

Other restorative services: procedure codes and maximum allowance [or] **of** other restorative services are as follows:

2910	Recement inlay	$ 7.00	$ 6.00	
2920	Recement crown	7.00	6.00	
2951	Reinforcement pins, one pin	4.00	3.00	
2952	Reinforcement pins, two pins	7.00	[9.00]	**6.00**
2953	**Reinforcement pins, three pins or more pins**	**10.00**	**9.00**	
2954	**Reinforcement band, including cementation, not reimbursable as an adjunct to any reimbursable** filling procedure on that tooth	**18.00**	**16.00**	
[2960	Acid etch for restoration (Reimbursable in conjunction with codes 2323 through 2326 and 2353 only	11.00	10.00]	

10:56-3.10 Endodontics

(a) Authorization of endodontic treatment will be influenced by the:

1. Age and general health of the patient,
2. Status of the tooth in the arch, and
3. Condition of the remaining dentition and supporting structures.

(b) A direct pulp cap is defined as an obtundent or regenerative dressing over the directly exposed vital pulp. This **is** differentiated from the routine placement of a medicated base**, indirect pulp cap,** or lining which is not reimbursable, and has a procedure code of 3110 and a maximum allowance, excluding final restoration of $6.00,S, and $5.00, NS.

(c) (No change.)

(d) The fee for root canal therapy includes the extirpation, treatment —complete filling of all the root canal(s) with permanent material, all necessary [X-rays] **radiographs** during treatment and post-operatively, and follow-up care. Excludes final restoration.

1. Conventional Type Root Canal Therapy

[1. Procedure code,] [has a maximum allowance of $75.00, S., and $65.00, NS]

d*3310	Incisors and cuspids (permanent) and deciduous teeth without permanent successor	**$103.00**	**$90.00**

[2. Procedure code,] [has a maximum allowance of $109.00,S, and $95.00, NS.]

d*3320	Bicuspids (permanent)	$132.00	$115.00

[3. Procedure code,] [has a maximum allowance of $144.00,S, and $125.00, N.S.]

d*3330	Molars (permanent)	$172.00	$150.00

2. Paste Fill Type Root Canal Therapy

3311	**Incisors and cuspids, (permanent) and all deciduous teeth without permanent successors. Sargenti Type Technique and/or Root Canal Filling**		
3321	**Bicuspids (permanent) Sargenti Type Technique and/or Root Canal Filling**	**109.00**	**95.00**

You're viewing an archived copy from the New Jersey State Library.

3331	**Molars (permanent) Sargenti Type Technique and/ or Root Canal Filing**	**144.00**	**125.00**

(e) A pulpectomy for deciduous teeth includes extirpation, treatment, and filling of all the root canal(s) with resorbable filling material. Post-operative X-ray(s) must be available. [Procedure code,] [has a maximum allowance of , S, and , NS]

d*3345	Pulpectomy (deciduous teeth with permanent successor only)	$17.00	$15.00

(f) Periapical services:

1. For complete details of periapical services, see subchapter 1 of this chapter.

2. Apicoectomy will be considered for authorization and reimbursement only if one or more of the following conditions exist:

i. Overfilled canal (previously treated tooth).

ii. Canal cannot be filled properly because of excessive root curvature or calcification.

iii. Fractured root tip that cannot be reached endodontically.

iv. Broken instrument in canal.

v. Perforation of apical third of canal.

vi. Broken root canal filling lying free in periapical tissues and acting as an irritant.

vii. Periapical pathology not resolved by previous endodontic therapy.

viii. Periapical pathology which will not be resolved by endodontic therapy alone.

ix. A post, post and core, or post-crown which cannot be removed.

3. Apicoectomy should not be performed for convenience. If endodontic treatment is necessary, but none of the above conditions exist, authorization for the apicoectomy will not be granted.

4. When more than one apical curettage and/or apicoectomy is performed through the same operative incision, the maximum amount reimbursable by the New Jersey Medicaid Program shall be the amount specified in this schedule with the greater alloiwance, plus one-half of the amounts specified for each of the other procedures.

5. Retrograde filling(s) will be inserted when necessary in conjunction with appropriate endodontic treatment, but not in lieu of a properly filled canal.

6. Post-treatment [X-rays] **radiographs** are required.

7. The following are procedure codes and maximum allowance for apicoectomy:

d*3411	Incisors and cuspids, per tooth	$55.00	$48.00
d*3412	Bicuspids and molars, per tooth	83.00	72.00

8. The following are procedure codes and maximum allowances for apicoectomy combined with single stage nerve extirpation and canal filling:

d*3425	Incisors and cuspids, per tooth	[$93.00]	**111.50**	[$ 81.00]	**98.50**
d*3426	Bicuspids and molars, per tooth	[110.00]	**155.50**	[96.00]	**135.00**

9. The following are procedure codes and maximum allowances for [O]other periapical services:

*3430	Retrograde filling — additional (one root), per tooth	[$ 6.00]	**9.00**	[5.00]	**7.50**
*3431	Retrograde filling — additional (two or more roots), per tooth	[12.00]	**14.50**	[10.00]	**13.00**
d*3440	Apical curettage, per tooth	49.00		42.00	
*3450	Surgical resection of entire tooth roots(s), hemi-section (not apicoectomy)	55.00		48.00	

(g) The following are procedure codes and maximum allowances for other endodontic procedures:

*3960	Bleaching of nonvital discolored tooth — per visit (limit two visits)	$ 11.00	$ 10.00
*3965	Apexification — limit two (2) — visits — Treatment may extend over a period of eighteen months, first visit.	31.00	27.00
*3966	Apexification — Second visit	16.00	13.00
3990	Emergency procedures (palliative)	7.00	6.00
*3999	Any other uncoded Endodontic, service, by report	IC	IC

10:56-3.11 (No change.)

10:56-3.12 Prosthodontics — removable

(a)-(1) (No change.)

(m) The following are procedure codes and maximum allowances for additional units for partial dentures:

*5310	Each additional cast chrome Cobalt alloy clasp and rest	$[17.00]	**21.00**	[15.00]	**18.00**
*5312	Each additional wrought gold clasp and rest	[15.00]	**21.00**	[13.00]	**18.00**
*5313	Each additional buccal or facial arm clasp	[8.00]	**16.00**	[7.00]	**14.00**
*5315	Immediate replacement of anterior teeth in conjunction with partial dentures (codes 5211 through 5283 only) in addition to denture, maximum six teeth, per tooth.	6.00		5.00	

(n) The following are procedure codes and maximum allowances for adjustment to denture ([O]other than dentist providing denture or after the required period of post delivery care (for example, new dentures, relines, rebases — six months; repairs — three months, and so forth)).

	1. **Adjustments to** complete dentures		
5411	Maxillary	$ 7.00	$ 6.00
5412	Mandibular	7.00	6.00
	2. Adjustments to partial denture		
5421	Maxillary	7.00	6.00
5422	Mandibular	7.00	6.00

(o) Repairs to dentures include adjustments for three months. Prior authorization is not normally necessary when Medicaid reimbursement for a repair to a denture does not exceed [$34.00 non-specialist fee or $39.00 specialist fee] **$53.00 specialist fee or $48.00 non-specialist fee.** The following are procedure codes and maximum allowances:

1. Repairing broken denture with no teeth damaged.

5611	Maxillary	[18.00]	**34.50**	[16.00]	**30.00**
5612	Mandibular	[18.00]	**34.50**	[16.00]	**30.00**

2. Repairing broken partial denture with no teeth damaged.

5616	Maxillary	[18.00]	**34.50**	[16.00]	**30.00**
5617	Mandibular	[18.00]	**34.50**	[16.00]	**30.00**

3. Repairing broken complete denture, and in addition, replacing one tooth.

5621	Maxillary	[24.00]	**39.50**	[21.00]	**35.00**
5622	Mandibular	[24.00]	**39.50**	[21.00]	**35.00**
5630	Replacing additional teeth, each tooth		5.00		5.00

4. Repairing broken partial denture, and in addition replacing one tooth.

5623	Maxillary	[24.00]	**39.50**	[21.00]	**35.00**
5624	Mandibular	[24.00]	**39.50**	[21.00]	**35.00**
5630	Replacing additional teeth, each tooth	5.00			5.00

5. Replacing broken tooth on complete denture (no other repairs) first tooth.

5641	Maxillary	[18.00]	**34.50**	[16.00]	**30.00**
5642	Mandibular	[18.00]	**34.50**	[16.00]	**30.00**
5630	Replacing additional teeth, each tooth		5.00		5.00

You're viewing an archived copy from the New Jersey State Library.

6. Replacing broken tooth on partial denture (no other repairs) first tooth

5643	Maxillary	[18.00]	**34.50**	[16.00]	**30.00**
5644	Mandibular	[18.00]	**34.50**	[16.00]	**30.00**
5630	Replacing additional teeth, each tooth		5.00		5.00

7. Adding tooth to partial denture (resin or cast) to replace extracted tooth not involving clasp or abutment tooth — attachment with resin only, first tooth.

5651	Maxillary	[29.00]	**46.00**	[25.00]	**40.00**
5652	Mandibular	[29.00]	**46.00**	[25.00]	**40.00**
5630	Replacing additional teeth, each tooth		5.00		5.00

8. Adding tooth to cast partial denture — additional casting welded to original case — resin attachment [to] **of** teeth, first tooth.

*5654	Maxillary	[46.00]	**69.00**	[40.00]	**60.00**
*5655	Mandibular	[46.00]	**69.00**	[40.00]	**60.00**
*5630	Replacing additional teeth, each tooth		5.00		5.00

9. Adding tooth and new cast chrome cobalt alloy clasp and rest to partial denture following extraction of abutment tooth.

*5661	Maxillary	[40.00]	**67.00**	[35.00]	**58.00**
*5662	Mandibular	[40.00]	**67.00**	[35.00]	**58.00**
*5630	Adding additional teeth, each tooth		5.00		5.00

10. Reattaching undamaged clasp on denture

5671	Maxillary	[21.00]	**34.50**	[18.00	**30.00**
5672	**Mandibular**	**[21.00]**	**34.50**	[18.00]	**30.00**

11. Replacing damaged clasp with new clasp on denture.

5681	Maxillary	[32.00]	**52.50**	[28.00]	**48.00**
5682	Mandibular	[32.00]	**52.50**	[28.00]	**48.00**

12. Repairing broken clasp by adding buccal/facial or lingual clasp arm only.

5683	Maxillary	[26.00]	**50.50**	[23.00]	**44.00**
5684	Mandibular	[26.00]	**50.50**	[23.00]	**44.00**

13. Adding Steele's facing and backing to cast partial denture — additional casting welded to original [cast] **case;** first tooth.

*5685	Maxillary	[53.00]	**79.00**	[46.00]	**69.00**
*5686	Mandibular	[53.00]	**79.00**	[46.00]	**69.00**
*5687	Each additional tooth (in conjunction with procedure **codes** 5685 and 5686 only).	[22.00]	**33.00**	[19.00]	**29.00**
*5695	Welding in addition to repair procedure (Exception-[numbers] **codes** 5654, 5655, 5685, and 5686 which include welding) limit two per denture.	[8.00]	**23.00**	[7.00]	**20.00**

(p) Denture rebasing and relining includes adjustments for six months:

1. Rebasing is the process [or] **of** refitting a denture by the complete replacement of the dentue base material without changing the occlusal relationship of the teeth and has the following procedure codes and maxmum allowances:

i. Rebasing complete denture

*5711	Maxillary	[69.00]	**92.00**	[60.00]	**80.00**
*5712	Mandibular	[6900]	**92.00**	[60.00]	**80.00**

ii. Rebasing partial denture

*5721	Maxillary	[63.00]	**86.00**	[55.00]	**75.00**
*5722	Mandibular	[63.00]	**86.00**	[55.00]	**75.00**

2. Relining is the process of resurfacing the tissue side of a denture with new base material to make it fit more accurately, and has the following procedure codes and maximum allowances:

i. Relining complete denture (office procedure)

*5731	Maxillary	$20.00	$17.00
*5732	Mandibular	20.00	17.00

ii. Relining partial denture (office procedure)

*5741	Maxillary	$20.00	$17.00
*5742	Mandibular	20.00	17.00

iii. Relining complete denture (laboratory procedure)

*5751	Maxillary	[52.00]	**69.00**	[45.00]	**60.00**
*5752	Mandibular	[52.00]	**69.00**	[45.00]	**60.00**

iv. Relining partial denture (laboratory procedure)

*5761	Maxillary	[46.00]	**63.00**	[40.00]	**55.00**
*5762	Mandibular	[46.00]	**63.00**	[40.00]	**55.00**

(q) Procedure code *5999, Any other uncoded prosthodontic remov**able** service, by report, the fee will be by individual cnsideration.

(g) Procedure code *5999, Any other uncoded prosthodontic remov**able** service, by report, the fee will be by individual consideration.

10:56-3.13 Prosthodontics-Fixed

(a) For abutments, See **procedure codes** [2710] **2721** through 2810.

1. The following are procedure codes and maximum allowance for Pontics:

[*6210	Cast gold	$ 76.00	$ 66.00]
***6211**	**Cast metal**	**76.00**	**66.00**
[*6212	Cast semi-precious	64.00	56.00]
[*6225	Cast gold pontic for Steele's facing, Tru-pontic pin facing, and so forth.]	90.00	78.00
[*6226	Case semi-precious pontiac, and so forth.	78.00	68.00]
[*6240	Porcelain fused to gold	115.00	100.00]
***6241**	**Porcelain fused to cast metal substrate**	**115.00**	**110.00**
[*6242	Porcelain fused to semi-precious metal	104.00	90.00]
[*6250	Plastic processed to gold	90.00	80.00]
***6251**	**Plastic processed to cast metal substrate**	**90.00**	**80.00**
[*6252	Plastic processed to semi-precious [metal]	81.00	70.00]

[c] **(b)** The following are procedure codes and maximum allowances for Repairs:

*6610	Replacing broken pin facing with slotted or other facing	$23.00	$20.00
*6620	Replacing broken facing where post is intact	20.00	17.00
*6630	Replacing broken facing where post backing is broken	31.00	27.00
*6640	Replacing broken facing with acrylic resin (office procedure quick cure-filling material, and so forth).	[17.00] **25.00**	[15.00] **23.00**
*6645	Replacing broken facing with acrylic resin (laboratory procedure)	[35.00] **52.00**	[30.00] **45.00**

[(d)] **(c)** The following are procedure codes and maximum allowances for other prosthetic services-fixed:

6930	Recement bridge-one abutment	$ 8.00	$ 7.00
6931	[Replacement] **Recement** bridge-two or abutments	14.00	12.00
6970	Recement facing	8.00	7.00
*6999	Any other uncoded Prosthodontic-fixed service	IC	IC

10:56-3.14 Exodontia and oral surgery

(a)-(b) (No change.)

(c) The following are procedure codes and maximum allowances for uncomplicated extractions:

You're viewing an archived copy from the New Jersey State Library.

7110	Permanent tooth, each tooth	[9.00] **10.50**	[8.00] **9.00**
7115	Deciduous tooth, each tooth	[9.00] **10.50**	[8.00] **9.00**

(d)-(q) (No change.)

10:56-3.15 Orthodontics

(a) Appliances for tooth guidance [h²as] **have** the following procedure codes and maximum allowances for S and NS respectively:

*8110	Removable	$69.00	$60.00
*8120	Fixed or cemented	69.00	60.00
[*]8130	Adjustment-[(]maximum 10 visits[)], per visit	6.00	5.00

(b) Appliances to control harmful habits ha[s]**ve** the following procedure codes and maximum allowances for S and NS respectively:

*8210	Removable	$69.00	$60.00
*8220	Fixed or cemented	69.00	60.00
[*]8230	Adjustment-[(]minimum 10 visits,[)] per visit	6.00	5.00

(c) Retention appliances-orthodontic retaining appliances (following comprehensive treatment by a previous dentist) ha[s]**ve** the following procedure codes and maximum allowances for S and NS respectively:

*8310	Removal	$69.00	$60.00
*8320	Fixed or cemented	69.00	60.00
[*]8330	Adjustment-maximum 12 visits, per visit	6.00	5.00

(d) Comprehensive orthodontic treatment: Case type-fixed or removable appliances. Itemize fee for diagnostic procedures and formal treatment separately. Indicate anticipated time under treatment-maximum treatment including retention, three years. When authorized, reimbursement for comprehensive orthodontic treatment will include retention as required at no additional charge. The procedure codes and maximum allowances for S and NS are as follows[;]:

*8410	Appliances	$162.00	$140.00
*8420	First through 12th month of treatment (to start on day insertion of appliance(s) is completed), per month	30.00	26.00
*8430	13th through 24th month of treatment, per month	28.00	24.00
*8440	25th through 30th month of treatment, per month	11.00	9.00
*8450	31st through 36th month (maximum of treatment), per month	11.00	9.00
*8999	Any other uncoded orthodontic services, by report	IC	IC

[Note: An asterisk (*) as used in the Manual of Dental Services denotes those procedures which normally require prior authorization in order to be eligible for reimbursement in the New Jersey Medicaid Program.]

NOTE: Reimbursement for the monthly fee is based on one or more visits to the practitioner during any calendar month. Reimbursement must not be requested for any month in which there is no monthly visit.

10:56-3.16 Other services

(a) Procedure code d9110, Emergency treatment of dental, pain or infection, palliative (flat fee for all services performed) when not covered by separately listed procedure has a maximum allowance of $7.00, S, and $6.00 NS.

(b) Procedure code [*]9220, General anesthesia has a maximum allowance of [$10.00] **$12.50**, S, and [$10.00] **$12.50**, NS.

1. The code above applies when the dentist performing the service (attending dentist) also administers the general anesthesia.

2. Reimbursement will be made for the administration of only one general anesthesia per visit.

(c) Special anesthesia **procedure** codes (Basic units-See American College Anesthesiologists Relative Value Guide-1967) has the following procedures codes and maximum allowances:

*9221	Maximum 4 units	[$20.00] **22.00**	[$20.00] **22.00**
[*9222	Maximum 5 units]	[25.00]	[25.00]
[*9223	Maximum 6 units]	[30.00]	[30.00]
*9225	Time units: Each additional 15 minute period or major portion thereof. ([1]Limited to "table" or "chair" time only)	[$5.00]	**$5.50**
	Maximum reimbursable two hours	[$5.00]	**$5.50**

1. The general anesthesia codes above are limited to use in [in] restorative dentistry alone or restorative dentistry in conjunction with other dental services requiring anesthetic management, and must receive prior authorization from the [o]Office **of the Chief,** [of the dental director] **Bureau of Dental Services.** These codes apply to those dentists appropriately qualified in general anesthesia (see section 1.22(a)3.ii.) and are reimbursable only to the dentist whose sole function is to administer general anesthesia.

2. An anesthesia record must be submitted which shows elapsed anesthesia time, and pinpoints time and amounts of drugs administered, pulse rate and character, blood pressure, respiration, and so forth. The [dental form MC-10] **Dental Services Claim Forms (MC-10)** for anesthesia and treatment must accompany this record to permit authorization for reimbursement. [has a procedure code of, and maximum allowance of, S, and, NS.]

*9235	Intravenous sedation (see section 10:56-1.22(a)4.)	$10.00	$9.00

(d) Professional consultation:

1. Diagnostic service provided by a dentist other than practitioner providing treatment. **A** [C]complete report must be available. **(See 10:56-1.1)** [has a procedure code of and a maximum allowance of $21.00,S, and $18.00 NS.]

d9310	Consultation, per case	**$22.00**	**$17.00**

(e) Professional visits:

[2. Procedure code] [has a maximum allowance of $5.00,S, $5.00,NS.]

9410	House visit[s], in addition to fee for service provided. [Procedure Code,] [This fee] [has a maximum allowance of $5.00,S, and $5.00, NS.]	**$10.50**	**$9.00**
9411	Long term care facility visit[s], in addition to fee for service	**$10.50**	**$9.00**

You're viewing an archived copy from the New Jersey State Library.

provided. **Code 9411** is reimbursed only once per trip per facility regardless of number of patients examined or treated.

(f) Hospital visit[s]:

[4. Procedure code,] [has a maximum allowance of $5.00,S, and $5.00, NS.]

9412	Hospital visit[s], in addition to fee for service provided **Note 1: Code 9412 will not be reimbursed in conjunction with Code 9310 or Codes 9420 or 9421. Not applicable in conjunction with those services which include follow-up days.** **NOTE 2: Code 9412 is reimbursed only once per trip per facility regardless of number of patients examined or treated.** **NOTE 3: Code 9412 is not reimbursable when Medicaid fee for service exceeds $25.00.**	**$9.00**	**$7.00**
9420	**Hospital Day-Initial-** **To include on the record as a minimum:** **1) Chief Complaint(s)** **2) Complete history of the present illness and related systemic review including recording of pertinent negative findings** **3) Complete pertinent past medical history** **4) Pertinent family history** **5) A full examination pertaining to the history of the present condition and including recording of pertinent negative findings** **6) Working diagnosis and treatment plan, including preparation of the "order sheet"** **7) If history and examination noted above is not personally done by the "billing" practitioner then this code will be downgraded to Code 9421 provided that code's criteria are met.** **NOTE: Code 9420 will not be reimbursed again if performed on the same recipient by the same practitioner, members of the same group, members of a shared health care facility, or practitioners sharing a common record or when Code 9310 has been billed in any hospital setting in conjunction with the same hospital admission and/or stay.**	**22.00**	**17.00**
9421	**Hospital Day-Subsequent-consisting of care and treatment by the practitioner and including those procedures ordinarily performed during a hospital visit dependent upon the practitioner's discipline.** **The following may be included in the progress notes:** **1) Update of symptoms** **2) Update of physical findings** **3) Resume of findings of procedures, if any done** **4) Laboratory, X-ray, consultations, etc., pertinent positive and negative findings** **5) Changes or confirmations of diagnosis and progress of case** **6) Additional planned studies, if any, and why** **7) Treatment changes, if any**	**$9.00**	**$7.00**

NOTE: Not reimbursable for those services that include follow-up days.

(g) Injections:

[5. Procedure code,] [has a maximum allowance of ,S, and ,NS] [see section 203.9 B.)]

d9610	Therapeutic drug injection **(see 10:56-section 1.22(b))**	$2.50	$2.50

[6. Procedure code,] [has a maximum allowance of,S, and NS.]

d**9611	Injection of one or more muscles of mastication in conjunction with treatment of T.M.J. dysfunction.	$13.00	$11.00

[7. Procedure code,] [has a maximum allowance of ,S, and ,NS.]

d**9612	Infiltration and/or nerve block for diagnostic **purposes** or purposes other than anesthesia in conjunction with operative or surgical procedure.	$13.00	$11.00

[8. Procedure code,] [has a maximum allowance of ,S, and ,NS]

9910	Application of desensitizing medicaments, **i.e. cervical sensitivity, erosions, etc.**	$ 6.00	$ 5.00

[9. Procedure code,] [has a maximum allowance of ,S, and ,NS]

*9915	Stabilization of teeth (trauma), per tooth	$11.00	$10.00

[10. Procedure code,] [has a maximum allowance of ,S, and ,NS]

d**9999	Other uncoded services (where no code number exists or existing code is not precisely applicable). Complete description of condition and proposed treatment must be submitted. By report.	IC	IC

[Exhibit B-delete entire text.]

10:56-3.17 Submission of requests for authorization

(a) For dentists, hospital outpatient departments, and independent clinics located in New Jersey requests for authorization should be submitted to:

You're viewing an archived copy from the New Jersey State Library.

Division of Medical Assistance and Health Services
Dental Claims Review Unit
Building 7
Quakerbridge Plaza
Quakerbridge Road
CN-713
Trenton, New Jersey 08625
Telephone: (609) 633-7787

(b) For providers located outside the State of New Jersey requests for authorization should be submitted to:
Division of Medical Assistance and Health Services
Bureau of Dental Services
Building 7
Quakerbridge Plaza
Quakerbridge Road
CN-713
Trenton, New Jersey 08625
Telephone: (609) 984-7863

10:56-3.18 Requests; payments, manuals, newsletters and forms

Request for payment, provider manuals, newsletters, additional Dental Service Claim Forms (MC-10) and other printed information should be addressed to:
The Prudential Insurance Company
Medicaid Claims Division
P.O. Box 1900
Millville, New Jersey 08332
Telephone: (609) 293-2176

(a)

DIVISION OF MEDICAL ASSISTANCE AND HEALTH SERVICES

Pharmaceutical Assistance to the Aged and Disabled
Confidentiality and Disclosure of Information

Proposed New Rule: N.J.A.C. 10:69A-6.11

Authorized By: George J. Albanese, Commissioner, Department of Human Services.
Authority: N.J.S.A. 30:4-24.3 and 30:4D-20, 24.

Interested persons may submit in writing, data, views or arguments relevant to the proposal on or before May 16, 1984. These submissions and responses, should be addressed to:

Henry W. Hardy, Esq.
Administrative Practice Officer
Division of Medical Assistance
and Health Services
CN-712
Trenton, NJ 08625

At the close of the period for comments, the Department of Human Services may adopt this proposal, with any minor changes not in violation of the rulemaking procedures at N.J.A.C. 1:30-3.5. Upon adoption of these rules, a notice of adoption shall be published in the Register. The adopted rule shall become effective upon publication of that notice of adoption in the Register.

This proposal is known as PRN 1984-193.

The agency proposal follows:

Summary

The proposed new rule concerns the confidentiality and disclosure of information regarding applicants or beneficiaries of Pharmaceutical Assistance to the Aged and Disabled (PAAD). The purpose of the rule is to establish a systematic method for regulating the disclosure of information in the PAAD program. Basically, information will not be released unless the request is related directly to the administration of the program. This concept is similar to the requirement utilized in the Medicaid (Title XIX) program.

The rule also indicates certain instances when information may be released without violating confidentiality. General statistical data that does not identify individual applicants or beneficiaries may be released. Certain agencies, such as the State Treasurer, Social Security Administration, etc. are allowed access to PAAD data. Agencies that are proceeding for recovery of incorrectly paid or applied for benefits are also allowed access.

Information regarding eligibility may also be released to the New Jersey Department of Health, and participating licensed veterinarians, for the purpose of verifying eligibility for benefits under the Animal Population Control Program (P.L. 1983, C.172, approved May 4, 1983).

Social Impact

The rule is designed to protect and preserve the confidentiality of applicants and beneficiaries of PAAD. However, the rule still enables the release of information to agencies that need it to administer the program.

Economic Impact

There is no economic impact associated with this proposal. The Division of Medical Assistance and Health Services will not be required to develop new administrative systems to implement the rule.

Full text of the proposed new rule follows.

10:69A-6.11 Confidentiality and disclosure of information

(a) All personally identifiable information regarding applicants or beneficiaries obtained or maintained under this program shall be confidential and shall not be released without the written consent of the applicant or beneficiary or their authorized agent.

(b) Disclosure of information without the consent of the applicant, beneficiary or their authorized agent shall be limited to purposes directly connected with the administration of the program pursuant to State law and regulations.

(c) The prohibition of (a) above against unauthorized disclosure shall not be construed to prevent:

1. The release of statistical or summary data or information in which applicants or beneficiaries cannot be identified.

2. The release to the Attorney General or other legal representative of this State of information or files relating to the claim of any applicant, beneficiary or their authorized agent challenging the program's statute, regulations or a determination made pursuant thereto, or against whom an action or

You're viewing an archived copy from the New Jersey State Library.

proceeding for the recovery of incorrectly paid benefits has been instituted.

3. The release of information to the program's contractor's, the Lifeline Credit Program, Tenant Lifeline Assistance Program, Social Security Administration, and other plans of assistance or insurance that covers the cost of prescription drugs in whole or in part.

4. The release of information or files to the State Treasurer or other governmental agency or to their duly authorized representatives, for an audit, review of expenditures or similar activity authorized by law.

5. The release of information or files to any law enforcement authority of this State charged with the investigation or prosecution of violations of the criminal provisions of the "Pharmaceutical Assistance to the Aged and Disabled Act" or the criminal laws of this State.

6. The release of information to the New Jersey Department of Health and participating licensed veterinarians for the purpose of verifying eligibility for benefits under the Animal Population Control Program.

(a)

DIVISION OF MEDICAL ASSISTANCE AND HEALTH SERVICES

Lifeline Credit Program
Tenants Lifeline Assistance Program
Confidentiality and Disclosure of Information

Proposed New Rule: N.J.A.C. 10:69B-2.6

Authorized By: George J. Albanese, Commissioner, Department of Human Services.
Authority: N.J.S.A. 30:4-24.3 and 48:2-29.19, 35.

Interested persons may submit in writing, data, views or arguments relevant to the proposal on or before May 16, 1984. These submissions and responses, should be addressed to:

Henry W. Hardy, Esq.
Administrative Practice Officer
Division of Medical Assistance
and Health Services
CN-712
Trenton, NJ 08625

At the close of the period for comments, the Department of Human Services may adopt this proposal, with any minor changes not in violation of the rulemaking procedures at N.J.A.C. 1:30-3.5. Upon adoption of these rules, a notice of adoption shall be published in the Register. The adopted rules shall become effective upon publication of that notice of adoption in the Register.

This proposal is known as PRN 1984-192.

The agency proposal follows:

Summary

The proposed new rule concerns the confidentiality and disclosure of information regarding applicants or beneficiaries of both the Lifeline Credit Program, commonly called "Lifeline," and the Tenants Lifeline Assistance Program, or "TLAP." The purpose of the rule is to establish a systematic method for regulating the disclosure of information in the Lifeline and TLAP programs. Basically, information will not be released unless the request is related directly to the administration of the program. This concept is similar to the requirement utilized in the Medicaid (Title XIX) program.

The rule also indicates certain instances when information may be released without violating confidentiality. General statistical data that does not identify individual applicants or beneficiaries may be released. Certain agencies, such as electric and gas utilities, the State Treasurer, Social Security Administration, Pharmaceutical Assistance to the Aged and Disabled, are allowed access to Lifeline and TLAP data. Agencies that are proceeding for the recovery of incorrectly or illegally paid or applied for benefits are also allowed access. Information regarding eligibility may also be released to the New Jersey Department of Health, and participating licensed veterinarians, for the purpose of verifying eligibility for benefits under the Animal Population Control Program (P.L. 1983, C.172, approved May 4, 1983).

Social Impact

The rule is designed to protect and preserve the confidentiality of applicants and beneficiaries of Lifeline and TLAP. However, the rule still enables the release of information to agencies that need it to administer the programs.

Economic Impact

There is no economic impact associated with this proposal. The Division of Medical Assistance and Health Services will not be required to develop new administrative systems to implement the rule.

Full text of the proposed new rule follows.

10:69B-2.6 Confidentiality and disclosure of information

(a) All personally identifiable information regarding applicants or beneficiaries obtained or maintained under these programs shall be confidential and shall not be released without the written consent of the applicant or beneficiary or their authorized agent.

(b) Disclosure of information without the consent of the applicant, beneficiary or their authorized agent shall be limited to purposes directly connected with the administration of the program pursuant to State law and regulations.

(c) The prohibition of (a) above against unauthorized disclosure shall not be construed to prevent:

1. The release of statistical or summary data or information in which applicants or beneficiaries cannot be identified.

2. The release to the Attorney General or other legal representative of this State of information or files relating to the claim of any applicant, beneficiary of their authorized agent challenging the program's statute, regulations or a determination made pursuant thereto, or against whom an action or proceeding for the recovery of incorrectly or illegally applied or issued benefits has been instituted.

3. The release of information to electric utilities, gas utilities, the Pharmaceutical Assistance to the Aged and Disabled Program, the Social Security Administration and the New Jersey Division of Public Welfare for the Special Utility Supplement.

4. The release of information or files to the State Treasurer or other governmental agency or to their duly authorized

You're viewing an archived copy from the New Jersey State Library.

representatives, for an audit, review of expenditures or similar activity authorized by law.

5. The release of information or files to any law enforcement authority of this State charged with the investigation or prosecution of violations of the criminal laws of this State.

6. The release of information to the New Jersey Department of Health and participating licensed veterinarians for the purpose of verifying eligibility for benefits under the Animal Population Control Program.

(a)

DIVISION OF PUBLIC WELFARE

Public Assistance Manual Continued Absence

Proposed Amendment: N.J.A.C. 10:81-2.7 and 3.17

Authorized By: George J. Albanese, Commissioner, Department of Human Services.

Authority: N.J.S.A. 44:7-6 and 44:10-3, and 45 CFR 232.11 and 233.90(c)(1)(iii).

Interested persons may submit in writing, data, views or arguments relevant to the proposal on or before May 16, 1984. These submissions, and any inquiries about submissions and responses, should be addressed to:

Audrey Harris, Director
Division of Public Welfare
CN 716
Trenton, New Jersey 08625

The Department of Human Services thereafter may adopt this proposal without further notice (see N.J.A.C. 1:30-3.5). The adoption becomes effective upon publication in the Register of a notice of adoption.

This proposal is known as PRN 1984-219.

The agency proposal follows:

Summary

The proposed amendment at N.J.A.C. 10:81-2.7(d)1 provides policy clarification, consistent with the Federal rule at 45 CFR 233.90(c)(1)(iii), relevant to the determination of "continued absence" for cases in which there is an indication that a continuing relationship exists between the alleged absent parent and his or her children. In such cases, under the amended rule, continued absence shall exist when there is evidence that the absent parent has in fact established residence in a separate dwelling unit.

The amended rule at N.J.A.C. 10:81-3.17(b) has been revised to align it with the child support and paternity rules proposed in the February 21, 1984 issue of the New Jersey Register at 16 N.J.R. 328(a) which supersedes any previously issued policy found in the Public Assistance Manual relevant to a client's obligation to cooperate in establishing paternity and obtaining child support as required by 45 CFR 232.11.

The amendment at N.J.A.C. 10:81-3.17(c)3 broadens the definition of "continued absence", for Aid to Families with Dependent Children (AFDC) program purposes, as required by Federal regulation (45 CFR 233.90(c)(1)(iii)). This amendment allows a parent to be considered "continually absent" when he or she is a convicted offender, but is permitted to live at home while serving a court-imposed sentence by performing unpaid public work or uncompensated community service during the workday.

Social Impact

The proposed rule at N.J.A.C. 10:81-2.7(d)1 regarding continued absence clarifies policy for both county welfare agencies (CWAs) and clients. The amendment provides guidance for establishing "continued absence" for purposes of determining program eligibility in situations in which there is an indication that a continuing relationship exists between the absent parent and his or her children, as evidenced by frequent and/or ongoing visits. The revised rule provides for clear direction in what was in some cases a subjective decision as to whether "continued absence" actually existed. Regardless of the frequency of visits, a parent must be considered absent from the home if he or she has established residence in a separate dwelling unit. This change makes the determination of "continued absence" more objective and less subject to interpretation. Further, the amended rule as proposed places no additional mandatory verifications requirements on clients.

The amendment at N.J.A.C. 10:81-3.17(b) aligns and cross references policy regarding child support and paternity to regulations governing these areas of policy. There is no change in procedure and consequently no social impact.

The broadened interpretation regarding continued absence in cases of convicted offenders was issued by the United States Department of Health and Human Service s in order to correct an inequity. The child of an incarcerated offender may be eligible to receive AFDC benefits; but the child of a convicted offender who performs unpaid public work or community service during the workday and is permitted to live at home while serving the sentence and who is equally unable to support the family was ineligible to receive AFDC benefits. Under the revised rule these two groups of individuals will receive equal treatment in the determination of eligibility for AFDC.

It is anticipated that these changes will affect a very small number of cases. However, for those affected, the changes will have a positive economic impact in that certain applicants previously denied eligibility under the existing "continued absence" rules will now be entitled to receive AFDC benefits.

Economic Impact

Any increase in caseload due to these changes is expected to be minimal and consequently cost to State and county governments negligible. Further, these changes will not impact significantly on administrative functions of the Department or county welfare agencies administering the program.

Full text of the proposal follows (additions indicated in boldface **thus**; deletions indicated in brackets [thus]).

10:81-2.7 Deprivation of parental support in AFDC-C

(a)-(c) (No change.)

(d) Absence: Continued absence of the parent from the home constitutes deprivation of parental support or care. Absence will be considered continued when it interrupts or terminates the parent's functioning as a provider of maintenance, physical care or guidance for the child; and the known or indefinite duration of the absence precludes the parent's performance of his[/]**or** her function in planning for the present support or care of the child. If these conditions exist,

You're viewing an archived copy from the New Jersey State Library.

the parent may be absent for any reason, and he[/]**or** she may have left only recently or sometime previously.

1. When there is an indication that a continuing relationship exists, as evidenced by frequent and/or ongoing visits between the alleged absent parent and his or her children, continued absence will exist when there is evidence that the absent parent has in fact established residence in a separate dwelling unit.

(e) (No change.)

10:81-3.17 Continued absence of the parent from the home

(a) (No change.)

(b) [No one may be required to initiate or cooperate in paternity or support preceedings as a condition of eligibility. If the parent refuses to take the necessary steps, the county welfare board will initiate or pursue legal action, unless the parent makes the decision to withdraw the application or to have assistance discontinued.]

Each applicant and recipient is required to cooperate in obtaining support and establishing paternity whenever necessary as a condition of eligibility for AFDC in accordance with the procedures set forth in N.J.A.C. 10:81-11.

(c) "Continued absence from the home" (see N.J.A.C. 10:81-2.7(d)) may be for any reason. The following are some of the ways to establish absence:

1.-2. (No change.)

3. Convicted offender living at home and serving court sentence: A parent who is a convicted offender but is permitted to live at home while serving a court-imposed sentence by performing unpaid public work or unpaid community service during the workday is considered absent from the home. The CWA shall verify such court-imposed sentence and document its findings in the case record prior to case validation.

Renumber 3.-6. as **4.-7.** (No change in text.)

(d)-(g) (No change.)

(a)

DIVISION OF PUBLIC WELFARE

Public Assistance Manual
Other Agency Responsibilities

Proposed Readoption: N.J.A.C. 10:81-7
Proposed Repeal: N.J.A.C. 10:81-7.15
Proposal New Rule: N.J.A.C. 10:81-7.15

Authorized By: George J. Albanese, Commissioner, Department of Human Services.
Authority: N.J.S.A. 44:7-6 and 44:10-3.

Interested persons may submit in writing, data, views or arguments relevant to the proposal on or before May 16, 1984. These submissions, and any inquiries about submissions and responses, should be addressed to:

Audrey Harris, Director
Division of Public Welfare
CN 716
Trenton, New Jersey 08625

The Department of Human Services thereafter may adopt this proposal without further notice (see N.J.A.C. 1:30-3.5). Pursuant to Executive Order No. 66(1978), this rule would otherwise expire on June 1, 1984. Readoption of the rule becomes effective upon acceptance for filing by the Office of Administrative Law of the notice of readoption. The concurrent amendment to the existing rule becomes effective upon publication in the Register of a notice of adoption.

This proposal is known as PRN 1984-224.

The agency proposal follows:

Summary

In accordance with the "Sunset Provisions" of Executive Order No. 66, the Department of Human Services proposes to readopt subchapter 7 of N.J.A.C. 10:81.

On February 3, 1975, pursuant to authority of N.J.S.A. 44:7-6, 44:10-3 and in accordance with applicable provisions of the Administrative Procedure Act of 1968, the Department adopted the Public Assistance Manual (N.J.A.C. 10:81-1.1 et seq.), which replaced the Manual of Administration (proposed at 6 N.J.R. 244(a)). An order adopting the manual was filed February 11, 1975, as R.1975 d.29 and became effective April 15, 1975.

N.J.A.C. 10:81-7 describes many vital county welfare agency (CWA) administrative responsibilities which do not directly relate to the determination of program eligibility or grant entitlement. Such responsibilities include the following significant areas: timely and adequate notification requirements relevant to agency actions; retention and disposal of case records; issuance of photo-identification cards; replacement of lost or stolen assistance checks; CWA participation in burial and funeral expenses; requirements for safeguarding of information concerning applicants for and recipients of assistance; rules ensuring that nondiscrimination prevails in the administration of public assistance benefits and procedures to be followed when the CWA suspects the fraudulent receipt of assistance.

The Division of Public Welfare conducted an internal review and evaluation of subchapter 10:81-7 prior to noticing for readoption. After such review of the rules, the agency determined the rules to be adequate, reasonable, and responsive to the purpose for which they were promulgated. Moreover, since the effective date of the initial rules, professional staff of the Division have continually reviewed and recommended to the Department revisions to those rules. Rule analyses have invariably considered comments received from interested persons and organizations. As a result of this continuous review process, the following include significant changes to N.J.A.C. 10:81-7:

N.J.A.C. 10:81-7.1(h)1 and 2 were added to fix responsibility for the continued payment of assistance pending a fair hearing when a recipient changes his or her county of residence.

N.J.A.C. 10:81-7.1(k)6iv was amended to provide more precise instructions to the CWA regarding exceptions to the timely notice requirement when a recipient's whereabouts is unknown.

N.J.A.C. 10:81-7.1(m) was added to specify that grant entitlement may be suspended without timely notice when the client fails to provide proper verification of wages for an earnings projection.

N.J.A.C. 10:81-7.18(a) had been amended on several occasions to redefine procedures to be followed when a recipient reports that an assistance check has been lot or stolen. The most recent amendment, which became effective February 21, 1984, increases the time frame to ten working days during

You're viewing an archived copy from the New Jersey State Library.

which the CWA is required to make a decision regarding replacement of a lost or stolen check.

N.J.A.C. 10:81-7.22 was amended on several occasions to increase the maximum fee payable by the CWA for burial expenses. The maximum allowable contribution by family members for such expenses was also increased.

N.J.A.C. 10:81-7.24(b) was modified to permit CWA payment of funeral and burial expenses in the event of the death of a newborn or a still birth in all AFDC categories.

N.J.A.C. 10:81-7.26(a)1 was modified to specify that the CWA shall refrain from contracting with a cemetery for the burial of a recipient, since this is the function and responsibility of the funeral director.

N.J.A.C. 10:81-7.26(d)3 was amended to revise rules for the calculation of funeral and burial payments made by the CWA.

N.J.A.C. 10:81-7.26(e) was amended on two occasions to redefine procedures to be followed by funeral directors when a claim for payment to the CWA for services rendered is submitted.

N.J.A.C. 10:81-7.26(e)1 was amended to improve procedures to be followed by the CWA when a bill for funeral services is being reviewed prior to payment.

N.J.A.C. 10:81-7.26(f) was expanded to provide detailed information regarding RSDI lump sum death benefits. Prior to this amendment the subsection directed the CWA to contact the Social Security District Office for such information.

N.J.A.C. 10:81-7.26(g) was revised to update information regarding Veterans Administration death benefits.

N.J.A.C. 10:81.7.38(b)1i was amended to include a reference to the handicapped as a segment of the population which are to be protected from discrimination in the administration of public assistance.

N.J.A.C. 10:81-7.44 was amended to refine instructions for reporting suspected welfare fraud to law enforcement authorities.

N.J.A.C. 10:81-7.47(a)1 was added to provide instructions to the CWA regarding the rights of individuals under investigation for welfare fraud.

In addition to the aforementioned amendments to subchapter 7, a change in current text at N.J.A.C. 10:81-7.15 is proposed. This proposal is a result of State Law (P.L. 1983 c.85) which makes the acceptance of a photo identification card by each Aid to Families with Dependent Children (AFDC) recipient payee a condition of eligibility. The proposal provides instructions to CWAs for the preparation of the card and establishes a penalty of ineligibility if a recipient payee refuses, without good cause, to be photographed or accept a card. Further, the proposal provides several exemptions to the mandatory acceptance of the card.

Social Impact

The social impact of subchapter 7, may be expressed in terms of ensuring the optimum functioning of a public assistance agency in order to meet its obligation to the clientele it is charged to serve. A compilation of data indicates that in 1983 an average of 410,000 persons per month were served under the AFDC program in New Jersey.

Specifically, under the provisions of subchapter 7, a recipient can expect to be notified of agency actions and decisions regarding his or her assistance payment in an adequate and timely manner in accordance with principles of due process. Without a rule mandating adequate and timely notice, the agency would have been permitted to undertake actions which may have had a severe impact upon the client without the client's prior knowledge.

The currently proposed changes in text at N.J.A.C. 10:81-7.15 mandating acceptance of a photo identification card by recipient payees as a condition of eligibility should facilitate the cashing of checks by recipients. They will also provide financial institutions with a useful tool for the prevention of check cashing fraud.

A recent amendment at N.J.A.C. 10:81-7.18(a) gives instructions regarding procedures for the replacement of lost or stolen checks. The social impact of this amendment is reflected in the fact that it enables the CWA to act, on the one hand, quickly to replace a lost or stolen check when circumstances warrant and, on the other, allows the agency the flexibility to withhold a decision on the replacement of the check for up to 10 working days provided further investigation is necessary.

The social impact of the rules concerning nondiscrimination in the administration of the AFDC program has obvious social impact in view of society's concern with civil rights. The rules concerning welfare fraud also have obvious impact in light of public concern about abuses affecting the public treasury.

Failure to readopt the provisions of subchapter 7 would deprive the AFDC program of its administrative framework. Inasmuch as the social conditions which led to the subchapter's adoption are still prevalent, readoption of this subchapter is necessary.

Economic Impact

N.J.A.C. 10:81-7.15, which establishes acceptance of a photo identification card as a condition of assistance eligibility, will undoubtedly reduce the incidence of abuse in the AFDC program. N.J.A.C. 10:81-7.18(a), recently amended to increase the period of time CWAs have to make decisions as to whether or not lost or stolen assistance checks will be replaced, should also serve to minimize program abuse.

Under the portion of subchapter 7 which deals with procedures to be followed in instances of suspected fraudulent receipt of assistance, the following impact was experienced: an average of 19,000 cases of suspected fraud per year were investigated since that subchapter was promulgated.

Inasmuch as the economic conditions which existed at the time subchapter 7 was adopted are to a great degree the same as they exist at present, readoption of the subchapter is essential. In fiscal year 1983 the total assistance expenditure for the AFDC program was $466 million. Failure to readopt the subchapter would result in a lack of guidelines for the administration of important aspects of the AFDC program.

Full text of the proposed readoption can be found in the New Jersey Administrative Code at N.J.A.C. 10:81-7, as amended and supplemented by the New Jersey Register.

Full text of the proposed repeal can be found in the New Jersey Administrative Code at N.J.A.C. 10:81-7.15.

Full text of the proposed new rule follows.

10:81-7.15 Issuance of photo identification cards

(a) The CWA shall issue a photo identification (ID) card (Form FSP-903), universal to both the AFDC and Food Stamp programs, to each assistance payee as a condition of eligibility. The photo ID card shall be used as proof of eligibility and to make check cashing possible.

You're viewing an archived copy from the New Jersey State Library.

(b) The CWA will establish a procedure for completion of the ID card that will ensure that the client need make only one visit to the agency for that purpose.

(c) Each photo ID card shall, at a minimum, include the name, case number, color photograph and signature of the recipient. The county seal or other type of logo produced via a validation plate shall overlap upon the ID card and the photo to preclude substitution of the photo.

(d) If the assistance payee in the eligible unit (EU) refuses to accept the ID card or refuses other than for reason of religious belief or disfigurement (see (d)3 and 4 below) to be photographed for the purpose of placing a photo on the ID card, the following shall apply:

1. If there is only one adult in the EU, that individual shall be considered ineligible for assistance and any benefits to which a child(ren) in the EU are entitled shall be issued in the form of protective payments (see N.J.A.C. 10:81-4.9). The ineligible adult may not be named as protective payee.

2. If there are two adults in the EU, the other adult shall be given the opportunity to become the payee, be photographed and accept the ID card. If the other adult also refuses to be photographed and/or accept the ID card:

i. In AFDC-C segment (incapacity) cases, either adult (at the EU's discretion) shall be rendered ineligible for assistance; or

ii. In AFDC-F segment cases, the adult who is not the principal earner shall be rendered ineligible for assistance; or

iii. In AFDC-N segment cases, either adult shall be rendered ineligible for assistance; and

iv. Any benefits to which the remaining members of the EU are entitled shall be issued in the form of protective payments.

3. In instances where a recipient payee's religious beliefs do not allow the taking of his or her photograph, the payee may accept an ID card without a photograph.

4. In instances where a recipient payee does not wish to be photographed because of disfigurement, the payee may accept and ID card without a photograph.

5. Where a protective payee (see N.J.A.C. 10:81-4.10) has been appointed, such payee may elect to either accept or refuse an ID card, with or without a photograph. This equally applies to non-needy parent persons and SSI recipients.

6. The penalty of ineligibility imposed on an adult in conjunction with this policy shall continue until such time as a photo ID card is in fact issued to him or her or another appropriate member of the eligible unit.

(a)

DIVISION OF PUBLIC WELFARE

Public Assistance Manual
Minimum Support Assessment Recommendation

Proposed New Rule: N.J.A.C. 10:81-11.18

Authorized By: George J. Albanese, Commissioner, Department of Human Services.
Authority: N.J.S.A. 44:7-6 and 44:10-3.

Interested persons may submit in writing, data, views or arguments relevant to the proposal on or before May 16, 1984. These submissions, and any inquiries about submissions and responses, should be addressed to:

Audrey Harris, Director
Division of Public Welfare
CN 716
Trenton, New Jersey 08625

The Department of Human Services thereafter may adopt this proposal without further notice (see N.J.A.C. 1:30-3.5). The adoption becomes effective upon publication in the Register of a notice of adoption.

This proposal is known as PRN 1984-222.

The agency proposal follows:

Summary

This proposal is a new rule, adding a new section to N.J.A.C. 10:81-11, which appeared in the February 21, 1984 issue of the New Jersey Register, at 16 N.J.R. 328(a).

The obtaining of fair and adequate support orders for absent parents on behalf of their dependent children who are receiving Aid to Families with Dependent Children (AFDC) program benefits has been a continuing problem with significant fiscal costs. Since support payments on behalf of AFDC recipients serve to reimburse the Federal, State, and county governments for assistance paid, higher support orders will result in reduced assistance expenditures.

The Department has been piloting a project in Essex County whereby amounts of support are sought in accordance with a standardized formula. This formula provides for consideration of the absent parent's medical expenditures and, if he or she is married, the needs of his or her family. Then a proportion of the absent parent's income is determined available to support the children for whom support is sought. Results of the pilot study have indicated that utilizing this method, the average support order would increase 150 percent.

Programmatically, use of a standardized methodology would eliminate wide disparities in the amount of support ordered payable under similar financial circumstances and would streamline procedures and methods used to determine the weekly support obligation.

Therefore, the Department proposes to require county welfare agencies to use the standardized support assessment to determine the minimum amount of support to be sought.

Social Impact

It is felt that use of the standardized support assessment will result in higher support orders, sometimes in excess of the amount of public assistance payable, thus reducing welfare dependency. Its application to cases not in receipt of public assistance will ensure a support order at a realistic level of income, thus precluding reliance on public assistance.

Economic Impact

As this standardized support assessment procedure results in only a recommended support obligation, the fiscal impact cannot be accurately estimated. However, its use should serve to increase support orders and thereby reduce expenditures in the Aid to Families with Dependent Children program.

Full text of the proposed new rule follows.

You're viewing an archived copy from the New Jersey State Library.

10:81-11.18 Support assessment

(a) The CWA shall recommend a minimum amount of support for consideration in support proceedings in accordance with individual county procedures. The recommended minimum weekly support amount shall be determined in accordance with the following steps.

1. Determine the absent parent's gross weekly earned and unearned income.

2. If the absent parent is married and living with a second family, deduct the amount found in Table II for his spouse and other dependents. (The absent parent is not counted as a dependent.)

3. A deduction shall be made for the amount of additional court ordered support which is being paid by the absent parent.

4. If the absent parent has extenuating circumstances, such as medical and dental expenses, an amount may be deducted not to exceed 10 percent of his or her gross income.

5. The amount remaining is the absent parent's adjusted income. This amount is compared to Table I. The amount indicated for the number of persons for whom support is sought is the minimum recommended support amount.

TABLE I
SUPPORT ASSESSMENT

WEEKLY GROSS INCOME	NUMBER OF DEPENDENTS 1	2	3	4	5
$ 0-25	15	15	15	15	15
26-50	15	15	15	15	15
51-75	15	15	15	15	20
76-100	15	15	20	25	25
101-125	15	25	25	30	35
126-150	20	30	35	40	45
151-175	25	35	40	45	55
176-200	30	40	50	55	65
201-225	35	50	60	65	75
226-250	40	50	70	75	85
251-275	45	65	75	85	100
276-300	50	75	85	100	110
301-325	55	80	95	110	125
326-350	60	90	105	120	135
351-375	65	100	120	135	150
376-400	75	110	130	145	165
401-425	80	120	140	160	180
426-450	90	130	155	175	195
451-475	95	140	165	190	215
476-500	100	155	180	205	230
501-525	110	165	195	220	250
526-550	120	180	205	235	265
551-575	130	190	220	255	285
576-600	135	205	235	270	305
601-625	145	215	250	290	325
626-650	155	230	270	305	345
651-675	160	245	285	325	365
676-700	170	260	300	345	385
701 +	25 percent of gross income	38 percent of gross income	44 percent of gross income	50 percent of gross income	56 percent of gross income

TABLE II
WEEKLY SECOND FAMILY ADJUSTMENT

Number of Dependents (Excluding Absent Parent)	Adjustment Amount
1	$34.00
2	67.00
3	89.00
4	102.00
5	116.00
6 +	add $13.00 for each additional dependent

(a)

DIVISION OF PUBLIC WELFARE

Assistance Standards Handbook Increase in AFDC Allowance Standards and Legally Responsible Relative Schedules

Proposed Amendment: N.J.A.C. 10:82-1.2, 2.13, 3.9 and 3.11

Authorized By: George J. Albanese, Commissioner, Department of Human Services.
Authority: N.J.S.A. 44:7.6 and 44:10-10.3.

Interested persons may submit in writing, data, views or arguments relevant to the proposal on or before May 16, 1984. These submissions, and any inquiries about submissions and responses, should be addressed to:

Audrey Harris, Director
Division of Public of Public Welfare
CN 716
Trenton, New Jersey 08625

The Department of Human Services thereafter may adopt this proposal without further notice (see N.J.A.C. 1:30-3.5). The adoption becomes effective upon publication in the Register of a notice of adoption.

This proposal is known as PRN 1984-223.

The agency proposal follows:

Summary

Payment levels in the Aid to Families with Dependent Children (AFDC) program were last increased in July of 1980. Since that time, inflation has eroded the purchasing power of AFDC recipients. These citizens, being at the lower end of the economic scale, have little flexibility in their household budgeting and therefore suffer the effects of inflation more severely than middle or upper income families. In order to maintain AFDC payments at levels compatible with health and decency, the Department proposes to increase payment levels by seven percent.

All tables and schedules directly related to AFDC payment standards are being proposed for revision to reflect a seven percent increase.

Further, by law (N.J.S.A. 44:4-101) certain relatives of public assistance recipients are legally responsible to support such recipients if they have sufficient ability. These relatives are the parents of recipients under the age of 18 and the children and spouse of a recipient of AFDC. A person aged 55 or over is responsible only in regard to his or her spouse and children under the age of 18 years. The standards by which county welfare agencies determine if legally responsible relatives have a capacity to support were last revised in 1979. The impact of inflation since that time has caused these standards to become unrealistically low in relation to the ability of relatives to support recipients of public assistance. Therefore, the Department proposes to update these standards. Part A of Schedule IV at N.J.A.C. 10:82-3.11(d) applies to parents of AFDC children other than "absent parents". ("Absent parents" will be treated in accordance with rules at N.J.A.C. 10:81-11 which appeared in the February 21, 1984 issue of the

You're viewing an archived copy from the New Jersey State Library.

New Jersey Register, at 16 N.J.R. 328(a).) Part A reflects the AFDC payment levels proposed for July 1, 1984 combined with average medical costs and the standard work expense deduction applicable for the AFDC program. Part B, for other legally responsible relatives is updated by the 43 percent increase in the cost of living since the time the standards were last revised.

Schedule V at N.J.A.C. 10:82-3.11(d) is used to determine the amount of contribution which should be sought from legally responsible relatives. This schedule currently results in 70 percent of the legally responsible relative's income, in excess of the amount in Schedule IV, being the amount to be contributed to relatives receiving public assistance. This 70 percent "tax rate" is considerably higher than the rate "absent parents" are often required to contribute. Since the Department is, elsewhere in this issue of the Register, proposing a standardized minimum support formula for absent parents, it is likewise proposing to revise this schedule.

Social Impact

The increase in AFDC payments will provide recipient families with assistance benefits more closely approximating actual need. This will improve the ability of AFDC recipient parents to provide for the needs of the children for whom this aid is intended.

The amendment to the schedules utilized to determine support capacity of legally responsible relatives will provide more consideration of the needs of the legally responsible relative and his or her family needs. It is felt that this proposal will be more equitable to such persons than the current rules.

Economic Impact

The total cost of the increase in AFDC standards is estimated for Fiscal Year 1985 to be $37.8 million, of which the Federal government will pay $18.9 million. The State and county shares of this cost are $14.2 million and $4.7 million, respectively.

The cost which results from revision of standards for determining the capacity of legally responsible relatives cannot be estimated but it is not thought to be significant. While the rules will serve to reduce such persons' capacity to support, to the extent these standards are more equitable, such persons will be more willing to provide their established share of support, thus reducing the administrative costs of enforcing their obligation.

Full text of the proposal follows (additions indicated in boldface **thus**; deletions indicated in brackets [thus]).

10:82-1.2 Schedule of allowances

(a)-(b) (No change.)

[(c) See the Public Assistance Manual, Appendix A, for Schedule III which identifies the public assistance allowance for certain Cuban Refugee individuals who are not eligible for assistance in accordance with AFDC standards.]

(c) Public Assistance Allowance Standards AFDC Program.

Schedule I AFDC-C AFDC-F	Number in Eligible Unit	Schedule II AFDC-N
$[137] **147**	1	$[91] **98**
[273] **292**	2	[182] **195**
[360] **385**	3	[240] **257**
[414] **443**	4	[276] **295**
[468] **501**	5	[312] **334**
[522] **559**	6	[348] **373**
[576] **617**	7	[384] **411**
[630] **675**	8	[420] **450**
[684] **733**	9	[456] **489**
[738] **791**	10	[492] **527**
Add $[54] **58** each person	more than 10	Add $[36] **39** each person

(d) AFDC eligibility shall not exist for any month if the total income of the eligible unit exceeds the amount indicated in Schedule III for the appropriate eligible unit size and program segment. For this purpose, total income shall include all income of the eligible unit (without benefit of the disregards in N.J.A.C. 10:82-4.4 or 4.5) including the income of stepparents and alien sponsors determined available to the eligible unit in the N.J.A.C. 10:82-2.9 and 3.13. Total income includes the earned income of the AFDC children. Child support payments, whether received directly by the household or collected through the CSP process, shall be counted in the determination of total income (see N.J.A.C. 10:82-2.13(f) for companion cases).

1. (No change.)

2. Funds exempted under N.J.A.C. 10:82-1.7 and 3.2(b)6 through 10 and monies disregarded under N.J.A.C. 10:82-4.6 shall not be considered income for this purpose.

Schedule III
Maximum Income Levels

AFDC-C AFDC-F	Number in Eligible Unit	AFDC-N
$[206] **221**	1	$[137] **147**
[410] **438**	2	[273] **293**
[540] **578**	3	[360] **386**
[621] **665**	4	[414] **443**
[702] **752**	5	[468] **501**
[783] **839**	6	[522] **560**
[864] **926**	7	[576] **617**
[945] **1013**	8	[630] **675**
[1026] **1100**	9	[684] **735**
[1107] **1187**	10	[738] **791**
Add $[81] **87** each person	More than 10	Add $[54] **58** each person

10:82-2.13 Companion cases

(a)-(d) (No change.)

(e) When any member of the eligible unit has income, earned or unearned, proceed as follows:

1.-2. (No change.)

3. Deduct the total income from the total allowance to determine the adjusted allowance (and grant) for the eligible unit.

Per Capita Table for Companion Cases

Total Eligible Unit	Number in -C or -F Segment 1	2	3	4	5	6	7	8	9
2	[137]**146**								
3	[120]**128**	[240]**257**							
4	[104]**111**	[207]**222**	[311]**332**						

You're viewing an archived copy from the New Jersey State Library.

5	[94]**100**[187]**200**[281]**301**[374]**401**
6	[87]**93**[174]**186**[261]**280**[348]**373**[435]**466**
7	[82]**88**[165]**176**[247]**264**[329]**353**[411]**441**[494]**529**
8	[79]**84**[158]**169**[236]**253**[315]**338**[394]**422**]473]**506**[551]**591**
9	[76]**81**[152]**163**[228]**244**[304]**326**[380]**407**[456]**489**[532]**570**[608]**652**
10	[74]**79**[148]**158**[221]**237**[295]**316**[369]**396**[443]**475**[517]**554**[590]**633**[664]**712**

Total Eligible Unit	Number in -N segment 1	2	3	4	5	6	7	8	9
2	[91]**98**								
3	[80]**86**[160]**171**								
4	[69]**74**[138]**148**[207]**221**								
5	[62]**67**[125]**134**[187]**200**[250]**267**								
6	[58]**62**[116]**124**[174]**187**[232]**249**[290]**311**								
7	[55]**59**[110]**117**[165]**176**[219]**235**[274]**294**[329]**352**								
8	[53]**56**[105]**113**[158]**169**[210]**225**[263]**281**[315]**338**[368]**394**								
9	[51]**54**[101]**109**[152]**163**[203]**217**[253]**272**[304]**326**[355]**380**[405]**435**								
10	[49]**53**[98]**105**[148]**158**[197]**211**[246]**264**[295]**316**[344]**369**[394]**422**[443]**474**								

(f) The Maximum Income Level: Per Capita Tables below shall be used to determine AFDC income eligibility for companion cases of two to 10 members. For cases of more than 10 members the maximum income level shall be the per capita of the standard for the total eligible unit on Schedule III, N.J.A.C. 10:82-1.2, multiplied by the number of members in that segment.

Maximum Income Level - Per Capita Table

Number in -C or -F Segment

Total Eligible Unit	1	2	3	4	5	6	7	8	9
2	[205]**219**								
3	[180]**193**[360]**385**								
4	[155]**166**[311]**333**[466]**499**								
5	[140]**150**[281]**301**[421]**451**[562]**602**								
6	[131]**140**[261]**280**[392]**419**[522]**559**[653]**699**								
7	[123]**132**[247]**265**[370]**397**[494]**529**[617]**661**[741]**794**								
8	[118]**127**[236]**253**[354]**380**[473]**507**[591]**633**[709]**760**[827]**886**								
9	[[114]**122**[228]**244**[342]**367**[456]**489**[570]**611**[684]**733**[798]**856**[912]**978**								
10	[111]**119**[221]**237**[332]**356**[443]**475**[554]**594**[664]**712**[775]**831**[886]**950**[996]**1078**								

Number in -N Segment

Total Eligible Unit	1	2	3	4	5	6	7	8	9
2	[137]**147**								
3	[120]**129**[240]**257**								
4	[104]**111**[207]**222**[311]**332**								
5	[94]**100**[187]**200**[281]**301**[374]**401**								
6	[87]**93**[174]**187**[261]**280**[348]**373**[435]**467**								
7	[82]**88**[165]**176**[247]**264**[329]**353**[411]**441**[494]**529**								
8	[79]**84**[158]**169**[236]**253**[315]**338**[394]**422**[473]**506**[551]**591**								
9	[76]**82**[152]**163**[228]**245**[304]**326**[380]**408**[456]**489**[532]**571**[608]**652**								
10	[74]**79**[148]**158**[221]**237**[295]**316**[369]**396**[443]**475**[517]**554**[590]**633**[664]**712**								

10:82-3.9 Available support

(a)-(e) (No change.)

(f) To determine the capacity of an absent parent to support his or her dependent children, the procedures at N.J.A.C. 10:81-11.18 shall be followed.

10:82-3.11 Determining amount of support

(a) **Monthly income standards:** Two sets of standards provide the basis for evaluation of an LRR's capacity to contribute to the support of the eligible unit:

1.-2. (No change.)

[3. The LRR's capacity to contribute is determined as 70 per cent of the amount of income in excess of the applicable standard, in order to allow for Federal income and other taxes. Schedule V is used to determine the 70 per cent figure.]

(b)-(c) (No change.)

(d) The method for determining capacity to support is:

1.-4. (No change.)

5. When the LRR's adjusted income exceeds the applicable standard, [70 per cent of the amount in excess of the standard] **the amount derived from Schedule V** shall be the evaluated contribution for support of the eligible unit.

[i. To determine the LRR's contribution, find the difference between his/her adjusted income and the applicable monthly standard on schedule IV;

ii. On schedule V, the 70 per cent table, identify the amount of difference in column (A) and the amount of contribution in adjoining column (B).]

6. (No change.)

[7. Evaluated contributions of less than $20.00 per month will be requested on a voluntary basis only.]

Schedule IV - Monthly Income Standards

Part A Parents of AFDC children	Family size	Part B All other LRRs
$[300]**375**	1	$[750]**1075**
[400]**500**	2	[1,050]**1500**
[500]**625**	3	[1,350]**1930**
[550]**690**	4	[1,650]**2360**
[600]**755**	5	[1,900]**2715**
[650]**820**	6	[2,100]**3005**
[700]**885**	7	[2,300]**3290**
[750]**950**	8	[2,500]**3575**
plus [$50] **$65**	Each Additional person	plus [$200] **$285**

Schedule V
[70 Percent] Table
for establishing LRR's contribution for support

Determine the difference between the LRR's adjusted income and the applicable monthly income standard on schedule IV. In [column (A)] **the table** below find the amount of this difference. The **corresponding** amount [in column (B)] **appropriate for the number of persons in the eligible unit for whom the LRR is responsible** is the contribution to be made by the LRR.

[When the difference is more than $100, add appropriate contribution figures; that is, for difference of $423, add $280 (400) and $16 (23) for a contribution of $296.]

Delete entire table currently in the Code and replace with the following new table:

Persons for Whom LRR is Responsible

Excess Income	1	2	3	4	5 +
$ 1-215	$ 65	$ 65	$ 65	$ 65	$ 65
216-325	65	65	65	65	85
326-435	65	65	85	110	110
436-540	65	110	110	130	150
541-650	85	130	150	175	195
651-760	110	150	175	195	240
761-865	130	175	215	240	280
866-975	150	215	260	280	325
976-1085	175	215	305	325	370
1086-1190	195	280	325	370	435
1191-1300	215	325	370	435	475
1301-1410	240	345	410	475	540
1411-1515	260	390	455	520	584
1516-1625	280	435	520	585	650
1626-1735	325	475	565	630	715
1736-1840	345	520	605	695	780

You're viewing an archived copy from the New Jersey State Library.

1841-1950	390	565	670	760	845
1951 +	20% of adjusted income	29% of adjusted income	34% of adjusted income	39% of adjusted income	43% of adjusted income

(a)

DIVISION OF PUBLIC WELFARE

Assistance Standards Handbook
AFDC Supplemental Payments

Proposed New Rule: N.J.A.C. 10:82-5.11

Authorized By: George J. Albanese, Commissioner, Department of Human Services.
Authority: N.J.S.A. 44:7-6 and 44:10-10.3.

Interested persons may submit in writing, data, views or arguments relevant to the proposal on or before May 16, 1984. These submissions, and any inquiries about submissions and responses, should be addressed to:

Audrey Harris, Director
Division of Public Welfare
CN 716
Trenton, New Jersey 08625

The Department of Human Services thereafter may adopt this proposal without further notice (see N.J.A.C. 1:30-3.5). The adoption becomes effective upon publication in the Register of a notice of adoption.

This proposal is known as PRN 1984-221.

The agency proposal follows:

Summary

As a result of requirements of the Omnibus Budget Reconciliation Act of 1981, the State was required to implement retrospective budgeting in Aid to Families with Dependent Children (AFDC). Retrospective budgeting requires that the AFDC payment be based on actual income received by a family two months earlier. While this budgeting process is intended to properly reflect real need and reduce overpayments in the program, it also creates a major hardship for recipient families suffering a sudden income loss. For instance, an AFDC family of three persons with countable earnings from employment of $300.00 receives an AFDC payment of $60.00. If the employed person was laid off in the beginning of January, the family would receive only $60.00 in AFDC benefits in both January and February in spite of having lost all other income. Not until March would the AFDC grant increase to reflect the loss of income. This process can create severe hardship on families as they attempt to meet ongoing household expenses.

The Department proposes to implement rules which would provide some relief in such situations. If, due to unanticipated circumstances, a family suffers an income loss to the extent that the family's remaining income, when combined with the AFDC grant is less than two thirds the family's AFDC allowance standard, a supplemental payment would be issued to increase benefits to the level of the family's full entitlement were it not for retrospective budgeting. The Department proposes to restrict such payments to circumstances over which the individual losing the income had no control or could not reasonably plan for in advance. This is being done to preclude the potential abuse of the availability of these payments.

Social Impact

These AFDC supplemental payments will, for families suffering a sudden and unpredictable loss of income, enable them to maintain essential household budget expenditures of the interim period before retrospective budgeting reflects the income loss. This will assist in maintaining a continuity of shelter and help assure adequacy of food and clothing for children.

Economic Impact

It is estimated that the cost of AFDC supplemental payments will be $257,000 for Fiscal Year 85. Federal financial participation for such payments is expressly prohibited by 45 CFR 233.20(b)(4). Therefore, the State's share of this cost is estimated to be $193,000 and the cost to the counties is $64,000.

Full text of the proposed new rule follows.

10:82-5.11 AFDC supplemental payments

(a) AFDC supplemental payments shall be granted when, in accordance with this section, an eligible unit has suffered a substantial loss of income due to unanticipated circumstances and its regular AFDC grant does not reflect that loss because of retrospective budgeting.

(b) A supplemental payment shall be issued for a payment month if all of the following conditions are met:

1. The eligible unit has filed a complete monthly status report (MSR) for the payment month and is otherwise eligible for AFDC;

2. The eligible unit notifies the CWA of the income loss in accordance with (d) below;

3. The income loss is established through verification;

4. It has been established that the loss of income was due to unanticipated circumstances (see (f) below); and

5. The eligible unit's remaining countable income (if any) plus the regular AFDC grant for the payment month is less than the appropriate standard in (h) below.

i. In circumstances in which the eligible unit's grant is subject to recovery, this determination shall be based on the AFDC grant that would be paid if it were not for the recovery.

(c) If the eligible unit is determined eligible for an AFDC supplemental payment, the amount of the supplemental payment shall be the difference between the applicable AFDC allowance (see N.J.A.C. 10:82-1.2) and the eligible unit's remaining countable income plus the regular AFDC grant (in grants subject to recovery, the grant that would be payable were it not for recovery).

(d) The eligible unit must notify the CWA of the income loss. Notification must be accomplished on the unit's MSR or, subsequent to submission of an MSR, by notifying the CWA by telephone, in writing, or in person. Further, the eligible unit must request supplement aid.

(e) The eligible unit is responsible for providing verification of the occurrence of and the amount of the income loss.

(f) Unanticipated circumstances are those over which the individual suffering the income loss had no control or opportunity to plan in advance. Unanticipated circumstances shall not include:

You're viewing an archived copy from the New Jersey State Library.

1. Loss of income which could reasonably be anticipated (for example, loss of seasonal employment);
2. Loss of income due to regular or periodic business closing;
3. Regular expiration of time-limited benefits such as unemployment benefits;
4. Voluntary termination or reduction of employment without good cause;
5. Termination with cause by the employer (dismissal resulting from some action or inaction of the employee);
6. Regular fluctuation of income due to the nature of the income source;
7. For income received less often than monthly, months in which the income is not received;
8. Loss of any benefits due to an individual's inaction or failure to comply with requirements for continued receipt;
9. Reduction of income caused by garnishment or recovery of previous overpayment; or
10. Loss of unreported income.

(g) No supplemental payment shall be granted for any month in which the income loss is not reported timely (see N.J.A.C. 10:90-2.3). There is no entitlement retroactively for any past months of income loss.

(h) AFDC supplement payment eligibility standards.

AFDC-C AFDC-F	Number in Eligible Unit	AFDC-N
$ 98	1	$ 65
195	2	130
257	3	171
295	4	197
334	5	223
373	6	249
411	7	274
450	8	300
489	9	326
527	10	351
Add $39 each person	more than 10	Add $26 each person

(a)

DIVISION OF PUBLIC WELFARE

General Assistance Manual
Increase in General Assistance Allowance Standards and Legally Responsible Relative Schedule

Proposed Amendment: N.J.A.C. 10:85-4.1 and 9.4

Authorized By: George J. Albanese, Commissioner, Department of Human Services.
Authority: N.J.S.A. 44:8-111(d).

Interested persons may submit in writing, data, views, or arguments relevant to the proposal on or before May 16, 1984. The submissions, and inquiries about submissions and responses, should be addressed to:

Audrey Harris, Director
Division of Public Welfare
CN 716
Trenton, New Jersey 08625

The Department of Human Services thereafter may adopt this proposal without further notice (see N.J.A.C. 1:30-3.5). The adoption becomes effective upon publication in the Register of a notice of adoption.

This proposal is known as PRN 1984-220.

The agency proposal follows:

Summary

General Assistance payment levels were last increased in 1974. Subsequent to that increase, the effects of inflation have severely eroded the purchasing power of General Assistance recipients. Current payment levels cannot adequately provide even minimal subsistence for persons dependent on such assistance. In order to maintain General Assistance levels consistent with health and decency, the Department proposes to increase payment levels by seven percent.

The allowance schedules at N.J.A.C. 10:85-4.1 for employable as well as unemployable General Assistance recipients are revised to reflect this seven percent increase.

Under the law (N.J.S.A. 44:4-101) certain relatives of public assistance recipients are legally responsible to support such recipients if they have sufficient ability. These relatives are the parents of recipients under the age of 18 and the children and spouse of a recipient of General Assistance. A person aged 55 or over is responsible only in regard to his or her spouse and children under the age of 18 years. The standards used by municipal welfare departments to determine if a legally responsible relative has a capacity to support were last revised in 1979. Increases in the cost of living since the time of that increase have made these standards unrealistic in relation to the real ability of legally responsible relatives to support General Assistance recipients. These standards have historically been identical to those used in the Aid to Families with Dependent Children program to determine capacity to support. Since the Department is proposing an update of those standards (elsewhere in this issue of the Register) it is proposing the same increase to the standards in General Assistance at N.J.A.C. 10:85-9.4.

Social Impact

The proposed seven percent increase in General Assistance payment levels will provide recipients with increased expendable income and thus increase their ability to purchase shelter and other necessities.

The revision to the schedules used to determine how much support a legally responsible relative can provide to a General Assistance recipient will increase the consideration given to the needs of the legally responsible relative and his or her family. The assessed capacity of such a relative will be at a level which can reasonably be expected to be contributed.

Economic Impact

The full cost of the seven percent increase in General Assistance payment levels will be $3.8 million for Fiscal year 85. Of that, the cost to the State will be $2.85 million. The cost to municipalities will be $.95 million.

You're viewing an archived copy from the New Jersey State Library.

The cost of increasing the standards for determining the capacity of legally responsible relatives to support General Assistance recipients cannot reasonably be ascertained but is not thought to be significant. These rules will serve to reduce the contribution expected from such persons. However, to the extent the proposed standards are more equitable, the assessed contribution may be more willingly provided, thereby reducing costs related to enforcement of the support obligation.

Full text of the proposal follows (additions indicated in boldface **thus**; deletions indicated in brackets [thus]).

10:85-4.1 State and local responsibilities

(a) In order to achieve equity among individuals and with other public assistance programs within the State, the Division of Public Welfare has been given responsibility for establishing, in accordance with State law and regulations, the conditions under which and procedures by which all payments of general assistance are to be made.

1. The standards set forth herein ([tables on next three pages] **Schedules I and II below**) have been established by the DPW as the amounts to which eligible individuals are entitled, less countable income and other available resources.

(b) The municipal welfare director is responsible for determining the eligibility of persons applying for [g]General [a] Assistance and for providing assistance, based on the established standards, necessary to prevent needy persons from suffering from cold, hunger, lack of shelter or sickness. He[/]**or** she has specific authority to issue payments to or on behalf of such persons and to expedite investigation of the circumstances of each case.

1. (No change.)

2. See N.J.A.C. 10:85-3.2(**e**) regarding verification of eligibility and sources of evidence.

(c) (No change.)

SCHEDULE I

Monthly Assistance Allowances
(Limited to persons determined unable to accept employment)

Number in Household	Eligible Unit 1	Eligible Unit 2
1	[178.]**190**	
2	[122.]**131**	[244.]**261**
3	[110.]**118**	[220.]**235**
4	[98.]**105**	[196.]**210**
5	[90.] **97**	[180.]**193**
6	[85.] **91**	[170.]**182**
7	[72.] **78**	[145.]**155**
8	[69.] **75**	[139.]**149**
9	[66.] **71**	[133.]**142**
10	[64.] **68**	[127.]**136**
11	[62.] **67**	[125.]**134**
12	[61.] **66**	[123.]**132**
13	[60.] **64**	[120.]**128**
14	[59.] **63**	**[118.]126**
15	[58.] **62**	[116.]**124**

Delete the current Schedule II in the Code and replace with the following new schedule.

SCHEDULE II
Monthly Assistance Allowances
(For eligible units in which at least one person is employable)

Number in Household	Number in Eligible Unit 1	2	3	4	5	6	7	8	9	10	11	12	13	14	15
1	**127**														
2	**87**	**174**													
3	**74**	**147**	**221**												
4	**64**	**127**	**191**	**254**											
5	**58**	**116**	**174**	**232**	**290**										
6	**55**	**109**	**164**	**218**	**273**	**327**									
7	**52**	**103**	**155**	**206**	**258**	**309**	**361**								
8	**50**	**99**	**149**	**198**	**248**	**297**	**347**	**396**							
9	**47**	**95**	**142**	**190**	**237**	**285**	**332**	**380**	**427**						
10	**46**	**91**	**137**	**182**	**227**	**273**	**319**	**364**	**410**	**455**					
11	**45**	**89**	**134**	**178**	**223**	**267**	**312**	**356**	**401**	**446**	**490**				
12	**44**	**88**	**131**	**175**	**219**	**263**	**306**	**350**	**394**	**438**	**481**	**525**			
13	**43**	**86**	**130**	**173**	**216**	**259**	**303**	**346**	**389**	**432**	**476**	**519**	**562**		
14	**42**	**85**	**127**	**169**	**211**	**254**	**296**	**338**	**381**	**423**	**465**	**507**	**550**	**592**	
15	**41**	**83**	**124**	**166**	**207**	**249**	**290**	**332**	**373**	**415**	**456**	**498**	**539**	**581**	**622**

In eligible units of more than 15, and $[27.] **29** for each additional member.

10:85-9.4 Determining amount of support

(a) Two sets of standards provide the basis for evaluation of an LRR's capacity to contribute to the support of the eligible unit:

1.-2. (No change.)

3. [Tax Allowance] **Capacity to contribute**: The LRR's capacity to contribute is determined [as 70 percent of the amount of income in excess of the applicable standard, in order to allow for Federal income and other taxes.] **in accordance with** Schedule V [is used to determine the 70 percent figure].

(b) Rules concerning the determination of LRR support are:

1.-2. (No change.)

3. Method for determing capacity:

i. The amount of the obligatory contribution is calculated as follows:

(1)-(4) (No change.)

(5) When the LRR's adjusted income exceeds the applicable standard, [70 percent of the amount in excess of the standard] **the amount derived from Schedule V** shall be the contribution for support of the eligible unit. [See Schedule V.]

ii. Limitation of obligatory contributions:

(1) (No change.)

[(2) Evaluated contributions of less than $20.00 per month will be requested on a voluntary basis only.]

Schedule IV-Monthly Income Standards

Part A Spouse, or Parent of Child Under Age 18	Family Size	Part B All Other LRR's
$[300.00]**375**	1	$[750.00]**1075**
[400.00]**500**	2	[1,050.00]**1500**
[500.00]**625**	3	[1,350.00]**1930**
[550.00]**690**	4	[1,650.00]**2360**

You're viewing an archived copy from the New Jersey State Library.

[600.00]**755**	5	[1,900.00]**2715**
[650.00]**820**	6	[2,100.00]**3005**
[700.00]**885**	7	[2,300.00]**3290**
[750.00]**950**	8	[2,500.00]**3575**
+ $[50.00]**65**	Each Additional Person	+ $[200.00]**285**

Schedule V
[70 Percent] Table
for establishing LRR's contribution for support

Determine the difference between the LRR's adjusted income and the applicable monthly income standards on schedule IV. In [Column (A)] **the table** below find the amount of this difference. The **corresponding** amount [in Column (B)] **appropriate for the number of persons in the eligible unit for whom the LRR is responsible** is the contribution to be made by the LRR.

[When the difference is more than $100.00 add appropriate contribution figures; for example, for difference of $423.00 add $280.00 (400) and $16.00 (23) for a contribution of $296.00]

Delete entire table currently in the Code and replace with the following new table.

Persons for whom LRR is responsible

Excess Income	1	2	3	4	5+
$ 1- 215	$ 65	$ 65	$ 65	$ 65	$ 65
216- 325	65	65	65	65	85
326- 435	65	65	85	110	110
436- 540	65	110	110	130	150
541- 650	85	130	150	175	195
651- 760	110	150	175	195	240
761- 865	130	175	215	240	280
866- 975	150	215	260	280	325
976-1085	175	215	305	325	370
1086-1190	195	280	325	370	435
1191-1300	215	325	370	435	475
1301-1410	240	345	410	475	540
1411-1515	260	390	455	520	584
1516-1625	280	435	520	585	650
1626-1735	325	475	565	630	715
1736-1840	345	520	605	695	780
1841-1950	390	565	670	760	845
1951 +	20% of adjusted income	29% of adjusted income	34% of adjusted income	39% of adjusted income	43% of adjusted income

(a)

DIVISION OF YOUTH AND FAMILY SERVICES

Capital Funding Program for Community Based Substitute Care, General Social Service and Partial Care Facilities

Proposed New Rule: N.J.A.C. 10:125

Authorized By: George J. Albanese, Commissioner, Department of Human Services.
Authority: N.J.S.A. 30:1-12, P.L. 1980, c.119.

Interested persons may submit in writing, dates, views or arguments relevant to the proposal on or before May 16, 1984. These submissions, and any inquiries about submissions and responses, should be addressed to:

Ted Allen, Coordinator
Office of Policy and Planning
Division of Youth and Family Services
1 South Montgomery Street
CN 717
Trenton, New Jersey 08625

At the close of the period for comments the Department of Human Services may adopt this proposal, with any minor changes not in violation of the rulemaking procedures at N.J.A.C. 1:30-3.5. Upon adoption of these rules, a notice of the adoption shall be published in the Register. The adopted rules shall become effective upon publication of that notice of adoption in the Register.

This proposal is known as PRN 1984-218.

The agency proposal follows:

Summary

The New Jersey Public Purpose Buildings Construction Bond Act of 1980 (P.L. 1980, c.119) authorized the issuance of $159 million in State bonds. $3.5 million has been allocated to the Division of Youth and Family Services, in part, for the improvement, rehabilitation, purchase and construction of community based facilities to benefit the Department of Human Services' clients. The proposed regulations prioritize those programs under the auspices of DYFS which require funding for capital expenditures which go beyond existing maintenance programs and support.

This proposal will enable funds to be issued, in many cases, to continue service rather than terminate or cause a reduction in service while life safety violations are being abated in community based facilities. It is a means to meet both the immediate and long term critical needs of the people of this State who are in need of social services as outlined in this proposal.

Social Impact

The proposed regulations will minimally affect agencies which provide the services for the Division but will substantially affect the clients of the Division who benefit from such services. The physical upgrading of facilities for clients will insure, to the extent possible, that agencies will be providing services in facilities according to State and local standards.

Economic Impact

The anticipated economic impact on the community agencies will be beneficial as it allows for the continued operation of services while at the same time it provides for ongoing services. The economic impact on the clients will be negligible.

Full text of the proposed new rule follows.

CHAPTER 125
CAPITAL FUNDING PROGRAM FOR COMMUNITY BASED SUBSTITUTE CARE, GENERAL SOCIAL SERVICE AND PARTIAL CARE FACILITIES

SUBCHAPTER 1. GENERAL PROVISIONS

10:125-1.1 Legal authority, applicability, scope, purpose

(a) This chapter applies to State contracts for the renovation and construction of community based facilities. This

You're viewing an archived copy from the New Jersey State Library.

chapter implements one portion of the New Jersey Public Purpose Buildings Construction Bond Act of 1980 and complements N.J.A.C. 10:3-2. The purpose of the program is to utilize funds from the New Jersey Public Purpose Buildings Construction Bond Act of 1980 to assist in the renovation, purchase and construction of Community based substitute care, general social service and partial care facilities which provide services to families and children under the auspices of the Division of Youth and Family Services. The scope of this program is limited to the purposes mentioned above for those who are either parties to or candidates for a service contract with the Division.

(b) In order to achieve the purposes of this chapter, the Department hereby delegates the responsibility for providing services and to regulate the provision of service to the Division.

10:125-1.2 Definitions

The following words when used in this chapter shall have the following meanings, unless the context clearly indicates otherwise.

"Agency" means a New Jersey public or non-profit private organization (as defined by New Jersey statute) applying for funding under this program.

"Capital Funding Agreement" means the agreement in the form of a written contract between the Department of Human Services or its duly authorized agent and the agency, which sets forth the terms and conditions applicable to awarding the funds.

"Department" means the New Jersey Department of Human Services.

"Division" means the Division of Youth and Family Services, New Jersey Department of Human Services.

"Facility" means the building(s) which may be constructed, purchased, renovated, remodeled, extended, and/or otherwise improved through this program. This also includes the land on which the building(s) is (are) situated.

"General social services" means the provision of services less than three hours per session outside clients' home which are intended to prevent or reduce abuse, neglect, exploitation, or the need for substitute care but with the aim for clients to become self-sufficient and/or to achieve or maintain a permanent tranquil home.

"Partial care" means the provision of services three or more hours per session outside clients' home which are intended to prevent or reduce abuse, neglect, exploitation, or the need for substitute care but with the aim for clients to become self-sufficient in a permanent tranquil home.

"Shall" means a mandatory requirement.

"Substitute care" means the provision of temporary or permanent care to clients whose needs prevent them from remaining in their own home.

10:125-1.3 Program priorities

(a) Priority shall be given to facilities which provide the following services:

1. Programs serving victims of abuse and/or neglect;
2. Programs intended to preserve families in crisis;
3. Community based programs which will serve either clients in institutions or clients at risk of institutionalization; and
4. Programs intended to preserve and strengthen families.

10:125-1.4 Capital funding priorities

(a) Capital funding priorities of facilities shall be considered when:

1. Life safety violations exist and where the safety of the service population is in question or jeopardy;
2. Assistance is required to maintain appropriate standards of licensing and/or certification;
3. A significant improvement in programming will be realized and is needed to protect the investment of the State and/or the agency which shall provide the continuation of services;
4. Assistance is required in the purchase or construction of a facility which shall meet an identified service need.

SUBCHAPTER 2. ELIGIBLE AGENCIES

10:125-2.1 Funding stipulations

(a) Any public or non-profit private agency incorporated in the State of New Jersey may apply for a contract under these regulations but shall adhere to the following conditions:

1. The agency comply with the State Uniform Construction Code N.J.A.C. 5:23, as well as the appropriate Manual of Standards established for the type of program it operates. Copies of the Division's standards, where applicable, are available upon request.
2. The agency shall sign a Capital Funding Agreement in which it agrees to abide by all existing Department guidelines and regulations for the use of capital funds and to use the funds exclusively for the renovation, purchase or construction of a Division-approved facility.
3. All Capital Funding Agreements under this chapter shall conform to the Department of Human Services standard agreement language pursuant to N.J.A.C. 10:3-2.
4. If an agency receives funds for planning and design services, it shall execute an agreement which conforms to the Department of Human Services standard form language for such services.
5. The agency shall agree to provide services for a specified time period and shall agree to reserve appropriate service units for Division referrals, as specified in the Capital Funding Agreement.
6. All Capital Funding Agreements and parties thereto shall comply with Departmental Administrative Orders.
7. As prescribed by the Department, facilities applying for a Capital Funding Agreement under this program shall submit to inspection by the Director, Office of Facilities and Maintenance and/or other regulatory offices of the State.
8. The Department or the Division may require that the agency provide or obtain matching funds for the project. This match shall be provided in accordance with Department and Division specifications. The agency portion of the total project costs may come from one or both of the following sources:
   i. Actual cash under control of the agency; and
   ii. A mortgage secured on the subject property.

SUBCHAPTER 3. ADMINISTRATION OF THE CAPITAL FUNDING PROGRAM

10:125-3.1 Procedure requirements

(a) All Capital Funding Agreements shall comply with the following procedures prior to final approval:

1. The agency shall submit, on a form supplied by the Division, a proposal to renovate, purchase or construct buildings for the purposes of providing services to clients under the auspices of the Division.
2. The proposal shall be reviewed by a committee composed of representatives of planning, operational and accountability units of the Division. After review, the proposal shall be submitted to the Director of the Division for review and approval and/or disapproval. If approval is secured, the

You're viewing an archived copy from the New Jersey State Library.

proposal shall be submitted to the capital facilities approval unit of the Department for review and approval and/or disapproval.

3. After review by the Division and the Departmental capital facilities planning staff, the Commissioner may approve State financial participation in the development of those capital funding proposals which comply with the regulations of the Department.

4. The Commissioner shall grant final approval of all capital improvement program contracts executed with agency sponsors.

10:125-3.2 Payment schedules

The Division and the agency shall negotiate a reasonable payment schedule. Such payment schedule shall be specified in the Capital Funding Agreement.

10:125-3.3 Records and reports

Each agency shall establish and maintain appropriate methods for conducting fiscal affairs. Adequate records shall be accessible, and reports shall be submitted to the Division as requested.

10:125-3.4 Interim inspections

The Department and the Division shall have the right to conduct inspections at various stages of construction for the purposes of reviewing construction progress, work quality and project expenditures.

10:125-3.5 Assurances of non-discrimination

The Division shall obtain assurance from each applicant that all portions and services of the entire facility for the construction of which or in connection with which aid under the New Jersey Public Purpose Buildings Construction Act of 1980 is sought shall be made available without discrimination on account of race, creed, color or national origin; and that no professionally qualified person shall be discriminated against on account of race, creed, color or national origin with respect to the privilege or professional practice in the facility.

(a)

DEVELOPMENTAL DISABILITIES COUNCIL

1984 State Plan for Services to Persons With Developmental Disabilities

Proposed Readoption with Amendments: N.J.A.C. 10:140

Authorized By: Catherine Rowan, Executive Director, New Jersey, Developmental Disabilities Council.
Authority: N.J.S.A. 30:1AA-7.

Interested persons may submit in writing, data, views or arguments relevant to the proposed rule on or before May 16, 1984. These submissions, any inquiries about submissions and responses, should be addressed to:

Jenny Kershner
Planning Specialist
New Jersey Developmental Disabilities Council
108-110 North Broad Street
CN 700
Trenton, New Jersey 08625

The Developmental Disabilities Council may adopt this proposal without further notice (see: N.J.A.C. 1:30-3.5). The adoption become effective upon publication in the Register of a notice of adoption.

This proposal is known as PRN-1984-226.

The agency proposal follows:

Summary

The New Jersey Developmental Disabilities Council proposes in the 1984 State Plan to change its priority funding areas for fiscal year 1984. The Council is proposing to maintain its funding of child development programs, but will change its second priority service area from community living arrangements to case management services.

The State Plan outlines and describes in detail the following:

1. Goals, objectives and structure of the Council.
2. Selection of the priority service areas that will be funded with developmental disability grants and the manner in which the grants are awarded.
3. Description of the network of public and private agencies who serve developmentally disabled persons.
4. Statistics on the prevalence of developmental disabilities by age and geographic region.

For fiscal year 1984, the Council has decided to maintain child development services as a priority service area. These service funds have primarily been utilized to support the development of early intervention programs. The Council will study the impact of proposed Department of Education funding for these programs to determine its future course of action in terms of funding for early intervention.

The Council has decided to change the priority service area, alternative living arrangements, to case management. The Council continues its commitment to the development of a wide variety of community based residential services for persons with developmental disabilities. In the past, developmental disabilities funds were primarily used to purchase furniture for group homes, which was necessary due to the unavailability of capital construction funds for this purpose. Now, however, purchase of furniture has been included in the capital grant contract, thus eliminating the need for funding in this area.

The Council's decision to select case management services was based on its commitment to the development of such a life-long service for all persons with developmental disabilities. The Council has recognized this need, especially in terms of non-mentally retarded disabled adults. Currently, no agency in New Jersey is responsible for providing comprehensive case management services to these adults.

The Council intends to utilize its available service funds under case management to develop a model case management system for New Jersey. The University Affiliated Facility located in the University of Medicine and Dentistry of New Jersey will be responsible for developing the model case management system.

The model system will focus on identifying the roles of case managers, and the development of an appropriate curriculum

You're viewing an archived copy from the New Jersey State Library.

which will provide direct service workers with the skills necessary to fulfill those roles.

Social Impact

The 1984 State Plan will guide the operation of the Developmental Disabilities Council, as well as the programs receiving developmental disabilities funding, the clients served by said programs, and public and private organizations providing services to developmentally disabled persons.

Funding the priority service area of early intervention programs will enable developmentally disabled or delayed infants to receive intervention services necessary to minimize the effects of the disability.

Funding a model case management system will enable all developmentally disabled persons to receive comprehensive case management services, not just persons with mental retardation or autism.

Economic Impact

Increased coordination of services to persons with developmental disabilities will minimize duplication of services which will ensure a maximal use of existing resources.

Funding for early intervention programs will decrease the need for special education and other services and in turn reduce costs. Recently, when the cost for providing special education at various age levels was calculated, and the total cost per child to age 18 was: 1. If child was provided with intervention at birth—$37,273; 2. intervention at age two—$37,600; 3. intervention at age six—$46,816; and 4. intervention at age six with no movement into a regular education program—$53,340.

It is evident that the earlier intervention takes place, the less expensive an individual's education will be in the long run.

Overall, the Council works toward improving services to developmentally disabled citizens while at the same time ensuring services are delivered in a cost-effective manner.

Full text of the complete 1984 State Plan can be obtained from:

Developmental Disabilities Council
108-110 North Broad Street
CN 700
Trenton, New Jersey 08625

LAW AND PUBLIC SAFETY

(a)

DIVISION ON CIVIL RIGHTS

Civil Rights
Discrimination Against Handicapped Persons

Proposed New Rule: N.J.A.C. 13:13

Authorized By: Pamela S. Poff, Director, Division on Civil Rights.

Authority: N.J.S.A. 10:5-1 et seq., specifically 10:5-8g.

Interested persons may submit in writing, data, views or arguments relevant to the proposed rule on or before May 16, 1984. These submissions, and any inquiries about submissions and responses should be addressed to:

Pamela S. Poff, Director
Division on Civil Rights
Room 400
1100 Raymond Boulevard
Newark, NJ 07102

The Division on Civil Rights thereafter may adopt this proposal without further notice (see N.J.A.C. 1:30-3.5). The adopted rule becomes effective upon publication in the Register of a notice of adoption.

This proposal is known as PRN 1984-206.

The agency proposal follows:

Summary

In 1972, the New Jersey Legislature passed an amendment to the New Jersey Law Against Discrimination, N.J.S.A. 10:5-1 et seq., prohibiting discrimination in employment, housing, and public accommodation on the basis of physical handicap. The statute was further amended in 1978 to include a prohibition of discrimination based on mental handicap. The proposed new rule will serve to establish principles for the interpretation of the New Jersey Law Against Discrimination as it applies to physical and mental handicap, and to specifically bring the New Jersey Law into conformity with existing Federal regulations pertaining to discrimination against the handicapped. The regulations are designed to alleviate any confusion experienced by employers, handicapped individuals and others who are impacted by the application of the New Jersey Statute.

On the Federal level, the prohibition of employment discrimination embodied in the Civil Rights Act of 1964 is not extended to handicapped individuals. However, in passing the Rehabilitation Act of 1973, Congress did address the question of discrimination against the handicapped. Section 503 of the Rehabilitation Act of 1973 prohibits employment discrimination on the basis of handicap by Federal contractors and subcontractors with contracts in excess of $2500. Section 504 of the Rehabilitation Act, as amended in 1974, protects participants and others involved in federally funded programs from discrimination due to handicap.

The proposed State handicap regulations were patterned after those promulgated under Section 504 of the Rehabilitation Act by various Federal agencies. The proposed regulations, however, are more comprehensive in that they also cover employers who are not Federal contractors or subcontractors with contracts in excess of $2500. Further, those sections of the proposed State regulations dealing with job advertising and solicitation, job referrals, labor organizations and real property are either not currently covered by the aforementioned Federal regulations or are mentioned in very broad terms. Hence, the New Jersey statute will reach many more employers and thereby offer further protection to the largest group of inhabitants in the State who are physically, mentally, psychologically or developmentally disabled as defined in the statute.

Following are capsulizations of some of the more pertinent sections of the proposed regulations:

13:13-2.1 Job advertising and solicitation

The section first provides a clarification of N.J.S.A.10:5-12(c) which prohibits discriminatory advertising in general.

You're viewing an archived copy from the New Jersey State Library.

The types of advertising considered discriminatory are specified. This section also encourages employers to apply affirmative action precepts to their recruitment policies.

13:13-2.2 Job referrals
This section outlines the conduct which may render employers, employment agencies, labor organizations, or other recruitment sources liable under the Act for discriminating against handicapped individuals in the area of job referrals.

13:13-2.3 Employment criteria
This proposed regulation provides that any employment test or other selection criterion must be related to the ability of the prospective employee to perform the job for which the test or selection criterion is administered or applied.

13:13-2.4 Pre-employment inquiries
This section prohibits the employer, employment agency, or labor organization from eliciting any information which would tend to divulge the existence of a handicap, unless such inquiries are aimed at determining whether an applicant for employment has a handicap which will impede work performance in the job being sought. This section also outlines the circumstances under which an employer may make inquiries as to an applicant's handicap, and indicates how an employer may lawfully condition an offer of employment on an applicant's successful completion of a medical examination.

13:13-2.5 Reasonable accommodation
This proposed regulation explains the employer's obligation under the law to make reasonable changes in the work environment that will enable a handicapped employee or applicant to perform the particular job sought. However, this section makes clear that an employer need not accommodate such an employee or applicant if the employer can demonstrate that the accommodation would impose an undue hardship on the operation of its business.

13:13-2.6 Wages and fringe benefits
This proposed regulation prohibits discrimination by employers against the handicapped in the terms, conditions, and privileges of employment.

13:13-2.7 Labor organizations
This section gives specific application of the statute to labor organizations. In general, it is unlawful for a labor organization to discrimination against a handicapped individual with respect to membership, hiring, promotion, transfer, compensation, representation, grievances, or any other matter directly or indirectly related to membership in or employment by such an organization.

13:13-2.8 Exception
This section provides examples which should help employers recognize instances whereby an individual's handicap reasonably precludes the performance of a particular employment.

13:13-3 Real property
The sections comprising this set of regulations prohibits discrimination against the handicapped in a wide range of activities involving the use and disposition of real property. Incorporated provisions make unlawful discriminatory advertising and solicitation, and prohibit inquiries concerning the handicap of a prospective purchaser, tenant, or occupant. Also unlawful is discrimination on the basis of handicap in the terms of sale or rental, eviction, and financing.

13:13-4 Access to public accommodations
This set of regulations outlines the areas of potential liability for owners, lessees, proprietors, managers, superintendents, agents, or employees of any place of public accommodation stemming from the protection afforded handicapped individuals by the New Jersey Law Against Discrimination.

Social Impact

The proposed regulations are intended to promote and expand employment and housing opportunities in the public and private sectors for handicapped individuals. The regulations will also assist in the mainstreaming of handicapped persons into society through the availability of additional employment, housing, and increased access to public accommodations.

The proposed employment regulations attempt to insure that handicapped individuals have the opportunity to perform in positions of employment for which they are qualified. Hence, positive societal impact is foreseen because the proposed rules will have the cumulative result of making the handicapped valuable contributors to the workforce. Employers will be minimally impacted because employers are generally prohibited from discriminating against qualified handicapped employees or applicants, and employers are obligated merely to reasonably accommodate such handicapped individuals.

Economic Impact

The proposed regulations relating to employment of the handicapped will have no significant economic impact on employers since they represent no appreciable change in the legal obligations of those employers already covered by regulations promulgated under the Federal Rehabilitation Act of 1973. Further, the impact on the business operations and concurrent productivity and efficiency of those employers not covered by the Federal regulations will be minimal. It should be noted in this regard that the proposed rules require that employment opportunities be extended to handicapped employers or applicants who are qualified for the positions sought. Also, employers need not accommodate an employee's limitation if such an accommodation would impose an undue hardship on the operation of its business. The regulations list factors to be considered in the determination of whether the accommodation of a particular individual's handicap is required under the law. These factors include the overall size of the employer's business, the type of operation the employer is engaged in, and the nature and cost of the accommodation needed. Hence, the proposed regulations are specifically designed to advance the opportunities of handicapped individuals without excessively burdening employers. Finally, the regulations clarify and capsulize existing law, and should therefore, assist employers in preventing complaints of discrimination and in protecting themselves from potential liability under the New Jersey Law Against Discrimination.

Lastly, the cost of compliance with the proposed regulations relating to real property and public accommodations will be minimal since the performance sought is limited to the sale and rental of real property and the use of public accommodations which would otherwise have been occupied or utilized by the non-handicapped.

Full text of the proposed new rules follows.

You're viewing an archived copy from the New Jersey State Library.

CHAPTER 13
REGULATIONS PERTAINING TO DISCRIMINATION ON THE BASIS OF HANDICAP

SUBCHAPTER 1. GENERAL PROVISIONS

13:13-1.1 Purpose

This chapter is designed to implement the New Jersey Law Against Discrimination, N.J.S.A. 10:5-1, et seq. ("the act" or "the statute") as it pertains specifically to discrimination on the basis of physical and mental handicap.

13:13-1.2 Construction

(a) Consistent with the public policy underlying the Law Against Discrimination and with firmly established principles for the interpretation of such remedial legislation, the remedial provisions of the statute will be given a broad construction and its exceptions construed narrowly.

(b) The provisions of these regulations are severable. If any provision or the application of any provisions of these regulations to any person or circumstances is invalid, such invalidity shall not affect other provisions or applications which can be given effect without the invalid provision or application.

13:13-1.3 Definitions

"Handicap" as used in this chapter shall have the same meaning as that term is given by N.J.S.A. 10:5-5q. It is also unlawful to take any action prohibited by these regulations because of a perception or belief that an individual suffers from a handicap, whether or not that individual is actually handicapped.

SUBCHAPTER 2. EMPLOYMENT

13:13-2.1 Job advertising and solicitation

(a) It is unlawful to print or cause to be printed any advertisement which has the effect of discouraging handicapped persons from applying for a job for which they are qualified, despite a particular disability or which contains the words "ablebodied person wanted", or their equivalent. An employer may include a statement of the particular physical or mental abilities reasonably necessary for the performance of the job.

(b) The publication by any communications medium of any notice or advertisement relating to employment, or to membership in a labor organization, indicating any preference, limitation, specification, or discrimination based on handicap is unlawful unless such notice or advertisement falls within one of the exceptions enumerated by N.J.A.C. 13:13-2.8.

(c) All employers, labor organizations and employment agencies should conduct job vacancy, membership recruitment and employment referral programs in such a manner as to assure that all persons, including the handicapped, are given fair and adequate notice of job vacancies, membership opportunities and employment referral opportunities:

1. Employers and labor organizations are encouraged to place notices or advertisements relating to employment, or to membership in a labor organization, in the newspaper having the largest circulation in the relevant labor market, unless the position sought to be filled requires specialized training, education, experience or licensing of a type not commonly found among members of the workforce in the relevant labor-market.

2. Employers should encourage their referral sources to seek and refer qualified handicapped individuals.

3. Employers are encouraged to list all job openings and requests for referrals with institutions and organizations of or serving the handicapped.

13:13-2.2 Job referrals

(a) The knowing use by an employer of any employment agency or recruitment source which does not refer handicapped individuals or which discriminates against handicapped individuals is an unlawful act of discrimination.

(b) The failure or refusal of any employment agency or labor organization to refer for employment any individual because that individual possesses a handicap is an unlawful employment practice. It is unlawful for an employment agency or labor organization to comply with an employer's request for referrals if such a request indicates either directly or indirectly that the employer will discriminate against persons possessing handicaps.

(c) It is an unlawful employment practice for any employment agency or labor organization to classify handicapped individuals in any way which would deprive or have the effect of depriving handicapped persons of employment opportunities or otherwise affect employee status.

13:13-2.3 Employment criteria

(a) It is an unlawful employment practice for any employer, employment agency or labor organization to make use of any employment test or other selection criterion that screens out or has the effect of screening out handicapped persons unless:

1. That test score or other selection criterion is shown to be job related for the position in question; and

2. Alternative job-related tests or criteria that do not screen out or have the effect of screening out fewer handicapped persons are not available.

(b) An employer, employment agency or labor organization shall select and administer tests concerning employment which accurately reflect the applicant's or employee's job skills, aptitude or competency, rather than reflecting the applicant's or employee's impaired sensory, manual or speaking skills (except where those skills are the factors that the test purports to measure, and are necessary to perform the job in question.)

13:13-2.4 Pre-employment inquiries

(a) It shall be an unlawful practice for an employer, employment agency or labor organization to elicit or attempt to elicit, either verbally or through the use of an application form, any information which would tend to divulge the existence of a handicap or health condition not reasonably related to the individual's fitness to perform the duties of the particular job sought; provided, however, an inquiry may be made as to whether an applicant for employment has any handicaps or health problems which will impede work performance in the job being sought.

(b) It is not unlawful for an employer to invite applicants for employment to indicate whether and to what extent they are handicapped, if such an inquiry is made in conjunction with required or voluntary remedial action to correct past discrimination or in compliance with instructions or requirements of an agency or agencies of local, State or Federal government. In such cases the employer must state clearly that the information requested is intended for use solely in connec-

You're viewing an archived copy from the New Jersey State Library.

tion with its remedial obligations or its voluntary or affirmative action efforts or its compliance with governmental instructions, that the information is being requested on a voluntary basis, that it will be kept confidential, and that refusal to provide it will not subject the applicant to any adverse treatment.

(c) It is not an unlawful employment practice to record any data required by law or by the rules and regulations of any state or Federal agency or acquired in connection with voluntary or affirmative action efforts conducted in accordance with these regulations, provided such records are maintained on separate forms that shall be accorded confidentiality, are kept in good faith for the purpose of complying with the law, and are not used for the purpose of discrimination in violation of the act.

(d) The act does not prohibit any officially recognized agency from keeping necessary records in order to provide services to individuals requiring rehabilitation or employment assistance.

(e) It is not unlawful for an employer to condition an offer of employment on the results of a medical examination held subsequent to such offer and prior to the employee's entrance on duty, provided that:

1. All entering employees are subjected to such an examination; and

2. The results of such an examination are used in accordance with these regulations and are not used to disqualify an applicant except to the extent that any disability discovered would preclude the safe or adequate performance of the job in question. (See also N.J.A.C. 13:13-2.5). An examination should consider the degree to which the person has compensated for his limitations and the rehabilitation services he has received or is receiving.

13:13-2.5 Reasonable accommodation

(a) All employers should conduct their hiring procedures in such a manner as to assure that all handicapped persons are given equal consideration with non-handicapped persons for employment on the basis of their qualifications and abilities. Each individual's ability to perform a particular job must be assessed on an individual basis.

(b) An employer must make a reasonable accommodation to the limitations of a handicapped employee or applicant, unless the employer can demonstrate that the accommodation would impose an undue hardship on the operation of its business.

1. Under circumstances where such accommodation will not impose an undue hardship on the operation of an employer's business, examples of reasonable accommodation may include:

i. Making facilities used by employees readily accessible and usable by handicapped persons;

ii. Job restructuring, part time or modified work schedules;

iii. Acquisition or modification of equipment or devices; and

iv. Job reassignment and other similar actions.

2. An employer should consider the possibility of reasonable accommodation before firing, demoting or refusing to hire a handicapped person on account of his or her handicap. The determination as to whether an employer has failed to make reasonable accommodation will be made on a case by case basis.

3. In determining whether an accommodation would impose undue hardship on the operation of an employer's business, factors to be considered include:

i. The overall size of the employer's business with respect to the number of employees, number and type of facilities, and size of budget;

ii. The type of the employer's operations, including the composition and structure of the employer's workforce;

iii. The nature and cost of the accommodation needed; and

iv. The extent to which accommodation would involve waiver of an essential requirement of a job as opposed to a tangential or non-business necessity requirement.

13:13-2.6 Wages and fringe benefits

(a) An employer's wage scale must be unrelated to the existence of handicap, except where permitted by State or Federal law.

(b) Occupational training and retraining programs, including but not limited to, guidance programs, apprentice training programs and executive training programs, shall not be conducted in such a manner as to discourage or otherwise discriminate against persons possessing handicaps.

(c) It is an unlawful practice for an employer to discriminate between persons who are handicapped and those who are not, with regard to fringe benefits provided either directly by an employer or through contracts with insurance carriers. Fringe benefits as used in this section include, but are not limited to, medical, hospital, accident and life insurance, retirement benefits, profit sharing and bonus plans, and leave.

This subsection does not, for example, prohibit any employer from providing medical insurance which does not cover the cost of any medical condition arising out of preexisting illnesses, which costs are incurred following an employee's date of hire. Rather, whatever medical insurance is made available to non-handicapped employees must be equally available to handicapped employees.

(d) Regulations promulgated pursuant to the Law Against Discrimination shall supersede any inconsistent term of a collective bargaining agreement.

13:13-2.7 Labor organizations

(a) It is unlawful for any labor organization to exclude or expel any individual from membership or from any apprenticeship program solely because that individual possesses a handicap.

(b) It is an unlawful employment practice for any labor organization to discriminate on the basis of a person's handicap in respect to hiring, tenure, promotion, transfer, compensation, terms, conditions or privileges of employment, representation, grievances or any other matter directly or indirectly related to membership in or employment by such an organization.

(c) It is unlawful for a labor organization to cause or to attempt to cause an employer to discriminate against an individual because of a handicap.

(d) It is unlawful to engage in any activity proscribed by (a), (b), or (c) above notwithstanding that activity is authorized or required by the constitution or by-laws of a labor organization or by a collective bargaining agreement or other contract to which the labor organization is a party.

13:13-2.8 Exception

(a) It shall be lawful to take any action otherwise prohibited under this section where it can reasonably be determined that an applicant or employee, as a result of a handicap, cannot presently perform the job.

1. Refusal to refer, admit to membership, hire, or transfer a handicapped person may be lawful where the nature or extent of the handicap presently reasonably precludes the

You're viewing an archived copy from the New Jersey State Library.

performance of the particular employment. Such a decision, however, must be based upon an objective standard supported by factual evidence rather than on the basis of general assumptions that a particular handicap would interfere with the individual's ability to perform the duties of the job.

2. Refusal to select a handicapped individual may be lawful where it can be demonstrated that the employment of the handicapped person in a particular position would presently be hazardous to the safety or health of such individual, other employees, clients or customers.

3. The burden of proof is upon the employer, employment agency or labor organization to demonstrate in each case that the exception relied upon is based upon an objective standard supported by factual evidence, but no exception shall be based on:

i. A refusal to select a handicapped individual because of the preferences of co-workers, clients, customers or the employer.

ii. A refusal to select a handicapped individual because of the increased cost of insurance whether actual or anticipated, under a group or employee insurance plan provided in accordance with the law or as a fringe benefit.

iii. A refusal to select a handicapped individual because of an assumption not supported by factual documented proof that such individual will incur a high rate of absenteeism in the future.

SUBCHAPTER 3. REAL PROPERTY

13:13-3.1 Application

This subchapter on discrimination in real property applies to vendors and lessors of property and their agents, real estate brokers, agents and salesmen, and lending institutions. For the purpose of this subchapter lending institutions include banks, building and loan associations, insurance companies and any other enterprise whose business consists in whole or in part in the making of commercial loans or other forms of financial assistance for the acquisition, construction, rehabilitation, repair or maintenance of housing accommodations.

13:13-3.2 Advertising and solicitation

(a) It is unlawful for any person to make, print or publish or cause to be made, printed or published any notice, listing statement or advertisement with respect to the sale, rental or lease of real property which indicates any preference, limitation, specification or otherwise discriminates based upon a handicap.

(b) It is unlawful for any real estate broker, agent or salesman to accept for listing any housing accommodation when the seller or lessor or his agent has expressed, directly or indirectly, an intention to discriminate against handicapped persons.

(c) It is not unlawful for any person to make, print or publish or cause to be made, printed or published any notice, listing, statement, or advertisement which indicates that barrier free accommodations are available for sale, rent, lease or occupancy.

13:13-3.3 Inquiries

It is unlawful for any person to make or cause to be made any written or oral inquiry or record concerning the handicap of any prospective purchaser, tenant or prospective occupant of any real property, unless such information is required by an agency of local, State of Federal government and the person states clearly that the information requested is intended for use solely by the government agency.

13:13-3.4 Sale or rental

(a) It is unlawful for any person to discriminate on the basis of handicap in the actual showing, sale, rental or lease of available real property. For example, a representation to any person, because that person possesses a handicap, that real property is not available for inspection, sale or rental when such real property is in fact so available is a violation of the act.

(b) It is unlawful for any broker, agent or salesperson to misrepresent the price of real property listed for sale, rent or lease or to fail to communicate to the seller or lessor any offer made by a prospective buyer or lessor because the applicant or prospective occupant possesses a handicap.

(c) It is unlawful for any person to fail or refuse to show, rent or lease any real property to a person because he or she has a sight or hearing disability and must be accompanied by a guide or service dog. Polices which restrict the availability of housing accommodations to persons without pets shall be void with respect to the above-mentioned segment of this protected class.

(d) It is unlawful for any person to discriminate against any individual because of handicap in the price, terms, conditions or privileges of the sale, rental or lease of real property or in the provision of services for facilities in connection therewith. Handicapped persons shall not be required to pay extra compensation as a result of their maintaining or requiring special practices or accessories though such persons may be liable for any specific damage which may be done to the premises by virtue of their special requirement.

1. This provision does not require a landlord to install or bear the expense of any such special accessories or practices. Apart from requiring payment for specific damage which may be done to the premises, however, a landlord may not charge a handicapped person an extra fee, for example, for keeping a guide or service dog or maintaining special equipment such as a shower bar.

(e) It is unlawful for any person to fail or refuse to rent to, or to impose different terms of tenancy upon, any handicapped individual because that individual is a recipient of Federal, State or local assistance, including medical assistance or housing subsidies.

13:13-3.5 Eviction

It is an unlawful act of discrimination for any person to evict a tenant solely because the tenant possesses a handicap.

13:13-3.6 Financing

It is unlawful for any lending institution or person to discriminate against an individual seeking a loan or other form of financial assistance whether in the initial extension of credit or in the terms and conditions of the obligation because that individual or an intended occupant of real property possesses a handicap. An application for loans or other forms of financial assistance means and extends to the purchase of an existing property, the reconstruction of new buildings and the rehabilitation, repair or maintenance of existing property.

SUBCHAPTER 4. ACCESS TO PUBLIC ACCOMMODATIONS

13:13-4.1 Application

The term "person" as used in this subchapter shall mean the owners, lessees, proprietors, managers, superintendents, agents or employees of any place of public accommodation.

You're viewing an archived copy from the New Jersey State Library.

13:13-4.2 General practices

(a) It shall be unlawful for any person to refuse, withhold from or deny an individual, either directly or indirectly, on account of a handicap, access to any of the accommodations, advantages, facilities or privileges of a place of public accommodation. It shall be unlawful for any person to discriminate against a handicapped person in the price, terms, or conditions upon which access to such accommodations, advantages, facilities or privileges may depend.

(b) It shall be unlawful for any person to refuse, withhold or deny either directly or indirectly the right of visually handicapped persons to be accompanied by guide or service dogs, especially trained for the purpose, in any place of public accommodation where such visually handicapped persons agree to reimburse any person for any damage done to the premises or facilities by such dogs.

(c) It shall be unlawful for any person to publish, circulate, issue, display, post or mail or cause to be printed circulated, issued, displayed, posted or mailed any written, printed or broadcast notice indicating directly or indirectly that the right of a handicapped person to have equal access to a place of public accommodation will be denied or abridged.

13:13-4.3 Exception

It shall not be an unlawful act of discrimination to take any action under N.J.A.C. 13:13-4.2, where it is established by a person that it is more probable than not that a handicapped person is presently unable to participate in the functions or use the facilities of a public accommodation in a manner which is safe to him or herself or to others.

(a)

DIVISION OF CONSUMER AFFAIRS BOARD OF PHARMACY

Internships; Externships; Approved Training Pharmacy

Proposed Readoption with Amendments: N.J.A.C. 13:39-4

Authorized By: New Jersey State Board of Pharmacy, Elaine N. Dunn, R.P., President.
Authority: N.J.S.A. 45:14-7.

Interested persons may submit in writing, data, views or arguments relevant to the proposal on or before May 16, 1984. These submissions and responses should be addressed to:

Elaine N. Dunn, R.P., President
New Jersey State Board of Pharmacy
1100 Raymond Boulevard, Room 325
Newark, New Jersey 07102

The Board of Pharmacy thereafter may adopt this proposal without further notice (See N.J.A.C. 1:30-3.5). Pursuant to Executive Order No. 66(1978), these rules expires on June 27, 1984. The readopted rule becomes effective upon acceptance for filing by the Office of Administrative Law (see N.J.A.C. 1:30-4.4(d)). The amendments to the readoption become effective upon publication of a notice of adoption in the Register.

This proposal is known as PRN 1984-205.

The agency proposal follows:

Summary

The original rules regarding internships were adopted in June, 1971 following an amendment in 1970 to N.J.S.A. 45:14-7 which required applicants for licensure to gain practical experience under the supervision of a registered pharmacist as prescribed by the regulations of the Board.

As to the continuing need for N.J.A.C. 13:39-4, an internal review by the rules subcommittee of the Board in consultation with the committee on internships (see N.J.A.C. 13:39-4.6) found the subchapter to be adequate, necessary and reasonable. In the past the rule has provided the content of the structured internship in New Jersey necessary to attain licensure. The rules have helped to ensure that the practical experience obtained is sufficient to produce competent pharmacists.

As to a review of each section of the subchapter, the Board and its committee found that requiring approval of preceptors and specifying their responsibilities, serves to ensure that only qualified individuals supervise internships, and makes clear to preceptors precisely what their duties will include; requiring approval of training pharmacies serves to ensure that training facilities have an adequate volume of prescriptions, equipment and recordkeeping systems to permit sufficient exposure of the student to the full spectrum of pharmacy practice; the minimum number of required hours of internship or externship is similarly aimed at ensuring sufficient exposure of the student to pharmacy practice to produce a competent pharmacist; requiring prompt reporting to the Board of any change in status as an intern allows the Board to oversee the progress of an internship and to act promptly if a proposed change is not acceptable; the committee on internships provides an effective oversight mechanism on internships, and an advisory group to the Board regarding necessary changes regarding internship requirements; and requiring the keeping of an intership log ensures that the work done by an intern is verified.

The continuation of the rule is necessary to ensure the proper functioning of the internship process as is obvious from a review of the foregoing summary of the manner in which the rule has operated. The proposed amendments to the rule are necessary to make the functioning of the program more efficient. For example, the proposal to include externs and externships in N.J.A.C. 13:39-4.1 and other sections of the rule makes clear that student externships should comply with many of the internship requirements. The new provision (N.J.A.C. 13:39-4.2(b)) that the Board has the right to determine the suitability of pharmacists to serve as preceptors gives the Board flexibility in choosing appropriate supervisors and expands upon the existing requirement that preceptors maintain a satisfactory record of law observance.

Social Impact

The proposed readoption will continue to ensure that consumers of pharmacy products will receive competent pharmaceutical services from properly trained new pharmacists. Pharmacy interns and externs will continue to receive the benefits of practical experience prior to licensure. Specifically recognizing and providing for externships as an acceptable means of gaining required experience allows students to attain

You're viewing an archived copy from the New Jersey State Library.

licensure faster by allowing them to gain experience while students, and also insures that their competency is equal to those that serve internships following college graduation. If the subchapter is not readopted, there will be no guidelines for acquiring the experience for licensure which is required pursuant to N.J.S.A. 45:14-7.

Economic Impact

Interns are generally paid for their work experience and thus receive an economic benefit, but they are paid at a lower rate than registered pharmacists. Thus there is a cost to the preceptor which should be readily absorbed by the profit from the prescriptions sold which are attributable to the intern and by the lower labor costs of employing an intern versus a registered pharmacist. Thus there should be no additional cost to the consumer. The administrative costs of running the program are, and should continue to be minimal as it is overseen by the already existing staff of the Board of Pharmacy and the internship and externship committee is composed of volunteer, unpaid members.

Full text of the proposed readoption with amendments follows (additions indicated in boldface **thus**; deletions indicated in brackets [thus]).

SUBCHAPTER 4. INTERNSHIPS; **EXTERNSHIPS; APPROVED TRAINING PHARMACY**

13:39-4.1 Definitions

The following words and terms, when used in this subchapter, shall have the following meanings, unless the context clearly indicates otherwise.

"Approved training pharmacy" means a pharmacy **or pharmacy department** approved by the Board to provide accredited practical experience to pharmacy interns **or externs.**

"Pharmacy intern" means any person who **has graduated from** [has completed at least his third year (or first professional year) at] an accredited **school or** college of pharmacy **approved by the Board,** who is employed in an approved training pharmacy for the purpose of acquiring accredited practical experience and who has first registered for said purposes with the Board.

"Pharmacy extern" means any person who has completed at least his fifth year (or second professional year) at an accredited school or college of pharmacy approved by the Board, who is assigned to an approved training pharmacy for the purpose of acquiring accredited practical experience under the supervision of the school or college at which he is enrolled.

"Pharmacy internship["] **or externship"** means the program of acquiring practical experience by a pharmacy intern **or extern respectively.**

13:39-4.2 Preceptor certification; application; procedures; responsibilities

(a) A registered pharmacist desiring to be certified as a pharmacy intern preceptor shall make application therefor to the Board upon such form as shall be prescribed and shall furnish evidence satisfactory to the Board that he:

[1. Has been a registered pharmacist for a period of at least three years;]

[2.] **1.** Has been registered and employed as a pharmacist on a full-time basis **for at least two years** in the state in which he is to supervise an internship;

[3] **2.** Has been engaged in the compounding and dispensing of pharmaceutical preparations and prescriptions and the supplying of drug products in a registered pharmacy for a period of at least three years, one year of which must have been immediately prior to the beginning of any pharmacy internship he is to supervise;

[4.] **3.** Has had a [satisfactory] record of law observance **deemed satisfactory by the Board;**

[5.] **4.** Has attended professional meetings or preceptor training conferences as may be designated by the Board of Pharmacy.

(b) The Board shall assign a pharmacy intern preceptor to each pharmacy intern. At no time may one pharmacy intern preceptor supervise the training of more than one pharmacy intern. **The Board reserves the right to determine the suitability of pharmacists to serve as preceptors.**

(c) The pharmacy intern preceptor in an approved training pharmacy must signify his willingness to cooperate with the Board of Pharmacy in developing pharmacy intern training and shall report to the Board from time to time as requested by the Board on the progress and aptitude of any pharmacy intern under his supervision.

(d) The compounding and dispensing of all prescriptions and drugs by the pharmacy intern must be under the direct supervision of a registered pharmacist.

(e) The pharmacy intern preceptor is charged with the responsibility of:

1. Supervising the activities of the pharmacy intern and ensuring that the intern will keep abreast of developments in pharmacy by reading current literature and journals, and by attending seminars and meetings of professional and scientific organizations;

2. Providing the pharmacy intern with experiences that will make him proficient in the compounding and dispensing of pharmaceutical preparations in the dispensing of drug products, health aids and related items;

3. Providing the pharmacy intern with instruction and guidance in:

i. Procedure for opening and closing pharmacy;

ii. General pharmacy operation;

iii. Ordering drugs and checking [of] drug orders;

iv. OTC preparations;

v. D.E.A. inventory and preparation of D.E.A. order;

vi. Sale of D.E.A. schedule V preparations and sale of poisons;

vii. Third-party prescription programs;

viii. Telephone procedure with physicians and patients;

ix. Assisting physicians and consulting patients;

x. Usage of reference books in pharmacy and reference material from other sources;

xi. Arrang[e]**ing** for one interview with a physician for [your] intern;

xii. Prepar[e]**ing** intern in any other area of pharmacy, important to good management and professional practice.

13:39-4.3 Training pharmacy approval.

(a) An approved training pharmacy must have a satisfactory record of observance of Federal, state and municipal laws and ordinances governing activity in which it is or has been engaged.

(b) The total number of prescriptions **or medication orders** filled annually, including renewals, in an approved training pharmacy must be at least 10,000 and there shall be no more than one pharmacy intern in training for each 10,000 prescriptions filled in the pharmacy.

(c) The approved training pharmacy shall as part of the services it renders, establish and maintain a medication record-keeping system for its patients approved by the [b]**B**oard.

You're viewing an archived copy from the New Jersey State Library.

(d) An adequate reference library shall be available for use by the pharmacy intern.

13:39-4.4 Practical experience

(a) The minimum accredited practical experience requirement shall be the equivalent of 1,000 hours as follows:

1. One thousand hours for completion of a structured internship conducted after graduation from an accredited college of pharmacy, and consisting of no less than 24 weeks supervised by a certified preceptor. Each week of practical experience shall consist of no less than 35 hours and no more than 45 hours of actual service per week.

2. In lieu of [paragraph 1 of this subsection,] **1. above,** an applicant may obtain up to 1000 hours by completion of a structured, controlled, college-credited externship and clinical pharmacy clerkship program of an accredited college of [P] **P**harmacy. Such programs must be approved by the Board.

3. In cases of a controlled, college-credited externship and clinical pharmacy clerkship program of an accredited college of pharmacy, where less than 1000 hours are accepted and approved by the Board, the balance of hours to make a total of 1000 must be gained through completion of **a** structured internship, conducted after graduation from an accredited college of Pharmacy, supervised by a certified preceptor with each week of practical experience consisting of no less than 35 and no more than 45 hours of actual service per week.

(b) A Board approved College of Pharmacy Externship Program shall provide that no less than 75 percent of the hours credited toward the practical experience requirement of the Board be gained in settings in which there is direct involvement with consumers or patients, registered pharmacists, and other licensed health care practitioners such as physicians, dentists and nurses. No less than 50 percent of the hours credited toward the practical experience requirement of the Board shall be acquired in an approved training pharmacy under the supervision of a certified preceptor. Not more than 40 hours of Board accredited practical experience shall be acquired per week.

(c) Credit for college externships or other experience programs shall not be allowed for experience gained prior to the fifth college year (or second professional year) in the College of Pharmacy Program.

[(c)] **(d)** It shall be the responsibility of both the preceptor and the pharmacy intern to keep accurate records of the time spent by the pharmacy intern for credit toward the requirements of N.J.A.C. 13:39-4.4(a)1. The Board shall provide appropriate forms to be submitted to the Board for approval of postgraduate practical experience.

[(d)] **(e)** It shall be the responsibility of the pharmacy college to certify that the requirements of N.J.A.C. 13:39-4.4(a)2 have been met. The Board shall provide appropriate forms for such certification.

13:39-4.5 Change in status

(a) An applicant for registration as a pharmacist in the State of New Jersey shall notify the [b]**B**oard within five days of:

1. The beginning of a term of internship;
2. The termination of an internship;
3. Change in number of hours of employment;
4. Change in the scheduled hours of employment;
5. Change [to] **of** preceptor;
6. Change in employing pharmacy.

(b) Each pharmacy intern preceptor must file **reports** quarterly [reports] or whenever requested by the Board of Pharmacy.

13:39-4.6 Committee on pharmacy internship **and externship**

A committee which shall consist of a member or members of the Board of Pharmacy, faculty and student representatives of the college or colleges of pharmacy [from which the board receives its most significant number of applicants for registration] **located within the State of New Jersey,** [a representative selected by the New Jersey Pharmaceutical Association,] and a certified pharmacist preceptor, all of whom shall be approved by the Board of Pharmacy, is established to advise and assist the [b]Board in all matters relating to the pharmacy internship program. All meetings of this committee shall be held in a public place and shall be open to attendance by members of the public. The [p] President of the [b]**B**oard shall designate the chairman of this committee who shall be a member of the [b]**B**oard.

13:39-4.7 Pharmacist intern **or extern** log

(a) Pharmacist interns **or externs** shall maintain a log for the [first 900 hours of the post-graduation] internship **or externship** period.

1. The log shall consist of an 8 inches by 11 inches loose-leaf notebook.

2. The log shall be entered weekly and contain:

i. The total number of prescriptions filled in the pharmacy and the number filled by the intern **or extern**.

ii. A brief summary of all new prescription drug products (New generic entities only), such as physical-chemical characteristics, dosage, forms, usage;

iii. One example of the most noteworthy of each of the following professional responsibilities;

(1) Usage of profile record card requiring contact with patient, physician or hospital to resolve potential problems;

(2) Consulting with patient, or nurse if in a hospital concerning method of taking or special instructions concerning use of prescription;

(3) Assistance to patient in area of OTC sales (if applicable).

(b) The log shall be submitted to the Board of Pharmacy [in conjunction with 300 and 600-hour postgraduation report forms. The final 300 hours of the log shall be presented at the time of the practical examination] **at the completion of the internship or externship period.**

(a)

NEW JERSEY RACING COMMISSION

Thoroughbred Rule: Administering Medication

Proposed Amendment: N.J.A.C. 13:70-14A.2

Authorized By: New Jersey Racing Commission, Harold G. Handel, Executive Director.
Authority: N.J.S.A. 5:5-30.

Interested persons may submit in writing, data, views or arguments relevant to the proposal on or before May 16, 1984. These submissions and any inquiries about submissions and responses should be addressed to:

You're viewing an archived copy from the New Jersey State Library.

Bruce H. Garland, Deputy Director
c/o New Jersey Racing Commission
CN-088 Justice Complex
Trenton, New Jersey 08625

The New Jersey Racing Commission thereafter may adopt this proposal without further notice (see: N.J.A.C. 1:30-3.5). The adoption becomes effective upon publication in the Register of a notice of adoption.

This proposal is known as PRN 1984-217.

The agency proposal follows:

Summary

Proposed amendments to N.J.A.C. 13:70-14A.2 would increase the time that a horse is required to be brought to the detention barn from three to five hours prior to race time. There are no other changes in the rule. The rule deals with the administration of diuretic medication that is intended to control respiratory bleeding. There are very strict requirements in the rules pertaining to placing horses on the bleeder's list and the administration of the medication. One of the requirements is that the horses on the list be brought to a detention barn prior to the race to receive the medication in a secure area under the supervision of the State Veterinarian. At present, the medication must be administered three hours prior to race time. Increasing the time to five hours will allow for a more accurate forensic analysis of pre-race urine tests because diuretic medication administered at the three hour mark has a greater potential to dilute the sample thereby interfering in the detection of forbidden substances. In addition, the additional time will allow for enough time to properly analyze the samples.

Social Impact

The proposed amendments will have a positive social impact upon the public since it is directed at minimizing interference in detecting forbidden substances. The public must have confidence that no one has an unfair advantage, otherwise, they will not place wagers and the racing industry will suffer.

Economic Impact

The direct economic impact of the proposed amendment is non-existent. There will be no change in costs, no direct effect on State revenue and no economic impact upon the State, the Racing Commission, or the public. The indirect economic impact of the amendment is positive. The amendment is aimed at increasing the public confidence in the fact that no one has an unfair advantage. If the public does not have that confidence in the integrity of racing, then the public will not place wagers. If the public does not place wagers, then there would be no pari-mutuel racing industry. Since the State derives approximately 10 million dollars in revenue from racing, there is an indirect economic impact.

Full text of the proposal follows (additions indicated in boldface **thus**; deletions indicated in brackets [thus]).

13:70-14A.2 Administering medication

(a)-(b) (No change.)

(c) All horses that are placed on the new bleeders list established pursuant to and after January 1, 1978, shall be required to be brought to the detention barn no later than [three] **five** hours prior to race time and shall remain in said detention barn until race time. During the said [three] **five**-hour period the horse shall be under the care and custody of a groom or caretaker appointed by the trainer. Any diuretic medication that is intended to control respiratory bleeding shall be administered by a licensed practicing veterinarian in said detention barn under the direct supervision of the State Veterinarian or an Associate State Veterinarian [three] **five** hours prior to race time. Pursuant to rule 19:41, said practicing veterinarian shall make daily reports of all such treatments.

(d) (No change.)

(a)

VIOLENT CRIMES COMPENSATION BOARD

Rules on Practice and Procedure Before the Violent Crimes Compensation Board

Proposed Repeal: N.J.A.C. 13:75
Proposed New Rule: N.J.A.C. 13:75

Authorized By: Kenneth W. Welch, Chairman/Commissioner, Violent Crimes Compensation Board.
Authority: N.J.S.A. 52:4B-9.

Interested persons may submit in writing, data, views or arguments relevant to the proposal on or before May 16, 1984. These submissions, and any inquiries about submissions and responses, should be addressed to:

Kenneth W. Welch, Chairman
Violent Crimes Compensation Board
60 Park Place
Newark, New Jersey 07102

At the close of the period for comments, the Violent Crimes Compensation Board may adopt this proposal with any minor changes not in violation of the rulemaking procedures at N.J.A.C. 1:30-3.5. Upon adoption of these rules, a notice of the adoption shall be published in the Register. The adopted rules shall become effective upon publication of that notice of adoption in the Register.

This proposal is known as PRN 1984-210.

The agency proposal follows:

Summary

The proposal replaces the current rules which were last revised in 1981. Since August 1981 there have been nine bills enacted by the legislature amending and/or expanding the scope of the Criminal Injuries Compensation Act. The various provisions of this new legislation have been incorporated into the proposed rules and will become part of the procedures and practices to be followed when making a claim against the Violent Crimes Compensation Board's fund. Further, the proposal sets forth Board policy on issues such as compensation for loss of body members, reimbursement of transportation costs, loss of earnings or support and what other sources of compensation the Board must take into consideration in order to determine what the remaining out-of-pocket loss is. This expression of Board policy will assist applicants and enable them to effectively present their claims

You're viewing an archived copy from the New Jersey State Library.

before the Board. The significant legislative changes state the following:

1. The Board shall provide information brochures to all police departments, hospitals and other emergency medical centers for display by those facilities.
2. The Board may grant emergency awards in $500.00 increments up to a maximum of $1,500.00 per incident.
3. The period for filing a claim has been extended from one year to two years or longer if good cause is shown.
4. The Board shall implement a special senior citizen awareness program.
5. The maximum award the Board may grant has been increased from $10,000.00 to $25,000.00.
6. The Board shall create a counseling-referral service to provide free assistance to victims to enable them to identify and utilize all resources available for crime victims.
7. The Board may award compensation for out-of-pocket losses to victims 60 and older or disabled even if they do not meet the minimum loss threshold of $100.00 or two weeks' loss of work.
8. The Board may compensate victims injured by relatives which was previously prohibited, if circumstances merit such compensation; for example, battered spouses, abused elderly parents.
9. The Board shall act as trustee of any funds generated for the criminal by the sale of a criminal's story for publication or other presentation in a public media format and hold the funds of the criminal for the benefit of the persons victimized by such criminal.

The newly proposed rules do not radically alter the existing procedures but do follow all the recently enacted legislative changes. Further, the proposals addressing issues such as compensation for loss body members and the loss of earnings or support are merely a formal written expression of the Board's policy which has developed after frequent consideration of those issues in the past.

Social Impact

The expressed legislative intent to provide victims of crimes with compensation to help alleviate the harsh consequences of being victimized will best be served by providing a set of rules which cover in a detailed yet understandable manner all the information required to present a claim to the Board. In compliance with that intent, this proposal presents an updated and revised version of rules of the Violent Crimes Compensation Board and brings them into conformity with current statutory law and Board policy. It offers the victims and their attorneys a single reference source which should be of assistance to them in making an effective presentation before the Board.

Overall, each of the changes mandated by the legislature is effectively expanding the rights of all crime victims who may be eligible under our program. Additionally, specific groups in our society should benefit from certain changes; for example, the public awareness programs for senior citizens and the elimination of a threshold loss requirement for seniors and the disabled will be of direct benefit to individuals in these groups.

Economic Impact

There should be no significant adverse economic impact on the operations of the program as a result of this proposal. The legislatively mandated changes set forth in the proposal which involve economic factors were given adequate consideration by the legislature and addressed at the time of enactment.

From the standpoint of crime victims, the proposal provides for increased compensation, up to $25,000.00 and also for the granting of emergency awards up to $1,500.00. These changes enable the Board to compensate victims for their entire out-of-pocket losses in a greater number of cases than under the old limitations. Since the $10,000.00 limitation was set in 1971, the impact from inflation resulted in several cases where the victim's loss exceeded the allowed maximum. In addition to making the victim whole, the emergency award changes will alleviate the undue economic hardship which could result from a sudden interruption of income for victims who live from pay-check to pay-check or have only one breadwinner in the household.

Full text of the chapter proposed for repeal can be found in the New Jersey Administrative Code at N.J.A.C. 13:75.

Full text of the proposed new chapter follows.

CHAPTER 75
RULES RELATING TO PRACTICE AND PROCEDURE BEFORE THE NEW JERSEY VIOLENT CRIMES COMPENSATION BOARD

13:75-1.1 Scope of rules

The following rules shall constitute the practice to be followed in all proceedings before the Violent Crimes Compensation Board.

13:75-1.2 Liberal construction of provisions

These rules shall be liberally construed by the Board to permit it to discharge its statutory function and secure equitable determinations in all matters before the Board.

13:75-1.3 Practice where rules do not govern

The Board may rescind, amend or expand these rules from time to time, provided the same is effected in accordance with the provisions of the New Jersey Administrative Procedure Act, and N.J.S.A. 52:4B-1 et seq. In any manner not expressly governed by these rules or by statute, the Board shall exercise its discretion.

13:75-1.4 Definitions

The definitions set forth in N.J.S.A. 52:4B-2 are hereby adopted by this Board and incorporated by reference in these rules.

13:75-1.5 Filing of claims

(a) For incidents occurring prior to November 30, 1981, all claims must be filed within one year of the date of the incident upon which the claim is based. For those incidents occurring on or after November 30, 1981, all claims must be filed within two years after the date of the incident upon which the claim is based or, if after that date, upon determination by the Board that good cause exists for the delayed filing.

(b) The incident must have been reported to the police within three months of its occurrence.

(c) All claims must be filed on official forms which include an authorization for securing medical and other necessary records and a subrogation agreement. Having been completed and notarized, these should be forwarded to the office of the New Jersey Violent Crimes Compensation Board at either 60 Park Place, Suite 1010, Newark, New Jersey 07102 or 194 West State Street, CN 084, Trenton, New Jersey 08625, either

You're viewing an archived copy from the New Jersey State Library.

in person or by mail. The official forms may be obtained by requesting them at the stated addresses or pursuant to the provisions of N.J.S.A. 52:4B-22. All forms should be returned within 30 days of the date original notification is given this office.

(d) If a claim is made by a minor, as defined under New Jersey law, the forms shall be signed by his parent or guardian unless New Jersey statutory provisions require otherwise. If a claim is made by a person who is mentally incompetent, the forms shall be signed by his guardian or such other individual who is authorized to administer his estate.

(e) At the time of filing of the claim, the Board shall provide counseling to victims without charge as provided by N.J.S.A. 52:4B-25.

13:75-1.6 Eligibility of claims

(a) The Board shall make an award solely to eligible victims of violent crimes as said crimes are defined by N.J.S.A. 52:4B-11.

(b) In instances where the victim of the crime has died as a direct result, thereof, the Board may award compensation to the following persons:

1. A surviving spouse, parent, or child of the deceased victim who has suffered economic loss;

2. Any relative of the deceased victim as defined in N.J.S.A. 52:4B-2 who was dependent upon the victim for support;

3. The relative, estate of, or other natural persons who have demonstrated out-of-pocket unreimbursed and unreimbursable medical and funeral expenses for which they have become responsible on behalf of the decedent due to the incident upon which the claim is based.

(c) Any claimant who is held to be responsible for the crime upon which a claim is based, or is held to have been an accomplice or conspirator of the offender or is injured while participating in an illegal activity, or is a relative of the offender or living with the offender as a member of his family relationship group, as defined by N.J.S.A. 52:4B-2, is not eligible for compensation. For incidents occurring after March 3, 1983, a relative of the offender or a victim living with the offender as member of the offender's family relationship group may recover, if, subsequent to the incident giving rise to the claim, the claimant no longer resides in the same household as the offender and the claimant cooperated in the prosecution of the offender.

(d) The Board reserves the right to consider any circumstances it deems to be relevant, including but not limited to, provocation, consent or behavior on the part of the victim which directly, or indirectly contributed to his injury or death, and the prior case history of the victim which may also include matters pertaining to the victim's medical history.

(e) No compensation shall be awarded if the victim was injured as a result of the operation of a motor vehicle, boat, or airplane unless the same was used as a weapon in the deliberate attempt to run the victim down, or the same was used in the commission of a crime as defined by a N.J.S.A. 52:4B-11 and the victim was injured by the same during the commission of said crime.

13:75-1.7 Compensable damages

(a) The Board may enter an Order of Payment where the claimant has suffered a minimum out-of-pocket loss of $100.00 as defined by N.J.S.A. 52:4B-18(d), or has lost at least two continuous weeks' earnings or support.

1. The minimum out-of-pocket loss requirement of (a) above shall not apply for incidents occurring upon or after December 6, 1982 where the applicant is 60 years of age or older, or is "disabled" as defined by 42 USC Sec. 416(i), the Federal Social Service Act. Those to be categorized as "disabled" for the purposes of the Criminal Injuries Compensation Act of 1971 are people who, because of a previously determined physical or mental impairment, including blindness, can not engage in any substantial activity. In addition, their disability must be expected to result in death or have lasted, or potentially can last, for a continuous period of not less than 12 months.

(b) The Board may order the payment of compensation for expenses incurred as a result of the personal injury or death of the victim. These expenses must represent a pecuniary loss to the claimant as defined by N.J.S.A. 52:4B-1 et seq., and these rules consisting of, but not limited to, work and earnings loss, replacement service loss (defined below), dependents' loss of support in case of death, other reasonable pecuniary loss incurred by claimant due to victim's death, and such allowable expenses which the Board determines to be reimbursable within these rules such as reasonable charges for reasonably needed products and services, accommodations, replacement tuition costs, medical care, rehabilitation, rehabilitative occupational training, and other remedial treatment and care.

1. The Board may order the payment of compensation for the loss of earning power as a result of the total or partial incapacity of the victim. Said loss includes work loss or loss of income the injured person would have performed if he had not been injured, and expenses reasonably incurred by him in obtaining services in lieu of those he would have performed for income. In computing the earnings loss the Board may consider any income received from substitute work actually performed by the claimant or any income that would have been earned through available appropriate substitute work he was capable of performing but unreasonably failed to undertake, and reduce the award, accordingly.

2. Replacement services loss means expenses reasonably incurred in obtaining ordinary and necessary services in lieu of those the injured person would have performed, not for income, but for the benefit of himself or his family, if he had not been injured.

3. In computing the earnings loss of the victim/claimant or in the case of death, the loss of support of the claimant/dependent, the Board shall only consider the victim's earnings and/or the amount of money the decedent was contributing toward household support at the time of the injury or death of the victim. Where the dependents of a decedent have received or are receiving a greater sum of money from other sources by reason of the decedent's death than the sum contributed to their support by the decedent at the time of death, no compensation for loss of support shall be awarded to the dependents. The Board, however, reserves the right to review its determination should claimant's dependency, marital or earnings status be altered, and to modify its award accordingly.

(c) Every claimant making application to the Board for compensation is required to produce verification for and provide evidence of all losses and injuries claimed as compensable items in said application, and the Board shall consider solely those losses and injuries for which such verification and evidence is so produced.

(d) In making its award the Board shall make no allowance for pain and suffering.

You're viewing an archived copy from the New Jersey State Library.

(e) In death cases the maximum reimbursement for funeral expenses will be $750.00. However, for deaths occurring on or after January 10, 1980, the maximum reimbursement shall be $2,000.00, or such amount as the Board will determine pursuant to N.J.A.C. 13:75-1.3.

(f) Unless otherwise permitted by these rules, the Board shall limit its award to losses incurred as a result of personal injury or death resulting from a violent crime as defined by N.J.S.A. 52:4B-11. All property damage is specifically excluded.

(g) For injuries resulting from incidents occurring on or after December 7, 1982, no compensation shall be awarded in an amount in excess of $25,000.00. For incidents occurring on or prior to December 6, 1982, the maximum compensation shall not exceed $10,000.00. These limitations shall remain in effect until statutory law provides otherwise.

(h) Unless otherwise provided for by N.J.S.A. 52:4B-1 et seq. and these rules, an award for compensation may be made whether or not any person is prosecuted or convicted for the crime giving rise to the claim before the Board.

13:75-1.8 Investigation of Claims

All claimants under the law creating the Board must fully cooperate with investigators, agents, and/or representatives of the Board in order to be eligible for any award. The claimant shall advise the Board of any and all changes of address and residence to permit the Board to properly process the claim petition. In the event that such cooperation is refused or denied, the Board may in its discretion deny such claim.

13:75-1.9 Request for hearings

(a) After investigation of a claim has been completed, the claimant shall be informed of the Board's recommendation in the matter and of his right to request a hearing by giving written notice to the Board within 20 days of receipt of the recommendation. After receipt of the claimant's response to said recommendation or where claimant fails to respond within 20 days, the Board may render a decision in writing or schedule a hearing pursuant to N.J.S.A. 52:4B-7.

(b) The Board may within its discretion make a determination whether further action concerning the application is necessary.

13:75-1.10 Conduct of hearings

(a) When a hearing is ordered, the claimant, his or her attorney, and all material and necessary parties, shall be notified in writing of the time, place and purpose of any such hearing. This notice shall be mailed not less than 15 days before the date of hearing, unless waived by the claimant. At the discretion of the Board, any issue may be considered and determined although not indicated in the notice of the hearing, if the administration of N.J.S.A. 52:4B-1 et seq. will thereby be substantially served.

(b) Hearings shall be held at a time and place designated by the Board.

(c) The claimant has the right to be present at the hearing, however, the claimant may be excused at his request. Claimant shall be allowed to present testimony or cross-examine witnesses personally or by counsel. Failure of the claimant to appear at the time of the hearing may be excused and a new hearing scheduled if the Board finds that good cause has been shown.

(d) Any person having a substantial interest in a proceeding may appear, produce evidence and cross-examine witnesses personally or by counsel. However, said appearance must be based upon a valid application or claim petition before the Board, submitted by an eligible victim, and in full compliance with N.J.A.C. 13:75-1.8.

(e) All hearings shall be conducted in an orderly manner so as to ascertain the rights of all parties. All witnesses shall testify under oath and a record of the proceedings shall be made. Any member of the Board may administer oaths and/or affirmations and may question the claimant and witnesses.

(f) The parties or their representatives shall be allowed a reasonable time for presentation of oral argument or for the filing of briefs or other statements as to the facts and questions of law. The claimant shall have the burden of proof by the preponderance of the credible evidence.

(g) The Board shall not be bound by common law or statutory rules of evidence or by any technical or formal rules of procedure other than as provided for in these rules. Any statement, document, or information necessary to afford the parties a fair hearing may be received as evidence. The Board may also accept hospital records or reports and physician's reports as proof of the injuries sustained without requiring the presence of the attending physician at the hearing.

(h) The Board may require a medical examination of the claimant by a physician selected from a panel of impartial medical experts. The claimant shall present himself to the physician selected at the time and place designated. A written report of such examination shall be filed with the Board by the examining physician and a copy mailed by the Board to the claimant or his attorney. The physician's fee shall be paid by the Board.

(i) Hearings shall be open to the public except that the Board in its discretion may hold private hearings in accordance with applicable legal requirements if the interest of the victim and/or claimant will be best served. In the following instances the Board may exercise its discretion:

1. Where prosecution against the alleged perpetrator of the crime is pending and/or the Board determines that there is a continuing or on-going investigation of the crime;
2. In an alleged sexual offense where the welfare and interest of the victim or dependents may be adversely affected;
3. In the interest of public morality;
4. Where prosecution has resulted in an acquittal or a dismissal on technical grounds;
5. Where the Board determines that because of a public hearing one or more of the parties will be subjected to public ridicule or personal mental anguish or embarrassment.

(j) Upon application of the claimant or his attorney submitted in affidavit or motion form, a case may be reopened for further investigation, and, if the Board finds it necessary, for further testimony. Approval of a motion to reopen proceedings shall not be deemed a matter of right but rather a matter within the Board's discretion. The Board may, on its own motion, reopen or reinvestigate cases at any time it deems necessary.

13:75-1.11 Attorneys

(a) Claimants have the right to be represented before the Board or any member, thereof, at all stages of proceedings, by an attorney-at-law duly licensed to practice in the State of New Jersey, or qualified to make such appearance pursuant to the Rules Governing the Courts of New Jersey, Rule 1:21-1(a).

(b) The attorney shall file a notice of appearance, or when appropriate, a notice of substitution prior to or at the time of his first appearance before the Board.

You're viewing an archived copy from the New Jersey State Library.

(c) If any party designates an attorney to represent said party and such attorney has executed and filed with the Board the appropriate notice, such notice shall remain in effect until:

1. The party represented files with the Board a written revocation of the attorney's authorization; or

2. The attorney files with the Board a written statement of his withdrawal from the case; or

3. The attorney states on the record at a Board hearing that he is withdrawing from the case; or

4. The Board received notice of the attorney's death or disqualification, and

5. The Board approved said attorney's removal from participation in the matter.

(d) After the filing of a notice of appearance or substitution in accordance with this section and as long as such notice may remain in effect, copies of all written communications or notices to the party shall be sent to such attorney in lieu of the party so represented or to both the party and his attorney at the Board's discretion. Service upon the attorney shall be service upon the party he represents.

13:75-1.12 Attorney's fees

(a) Attorney's fees shall be approved by the Board. However, whenever an award is made, the claimant's attorney shall receive a fee not exceeding 15 percent of the amount awarded as compensation. Before approval, the Board shall require an affidavit of services rendered where said fees exceed $500.00. An attorney shall not ask for, contract for, or receive from the claimant any sum other than the fee set by the Board.

(b) Where no Order of Payment is entered by the Board, the Board shall make no award of a legal fee to the attorney for the claimant. Where an appearance is made pursuant to N.J.A.C. 13:75-1.10(d), the Board shall make no award of a legal fee.

(c) Attorney's fee shall be computed on an hourly basis and shall not exceed a maximum of $50.00 per hour.

(d) All records of public agencies that are necessary to the investigation of a claim shall, whenever possible, be obtained by the Board. Therefore, no payment will be made to an attorney for obtaining such reports unless the Board had made a specific request of the claimant and or of his attorney for such reports.

13:75-1.13 Subpoenas

(a) The Board shall issue subpoenas and subpoenas duces tecum, either at its own instance or upon written application of any party made not less than 10 days prior to the hearing. The 10 days provision may be waived at the discretion of the Board.

(b) The claimant may file an application for the issuance of a subpoena and the Board may issue the same upon the showing of necessity that the evidence sought constitutes an element of the claim. The claimant's application for subpoena shall be in writing designating the names and addresses of witnesses and the locations of documents, books, payrolls, personal records, correspondence, papers or any other evidence necessary to the claim being heard.

(c) Where a subpoena is issued pursuant to (b) above or at the instance of the Board or any member thereof, service and witness mileage fees shall be borne by the Board. The mileage fee shall be the prevailing rate on the date of the appearance as established by the State Department of Treasury.

(d) The Board, at its own instance or on application in writing of the claimant, shall take or cause to be taken affidavits or depositions of witnesses residing within or without the State, whenever it deems such procedures necessary. The Board may set appropriate terms and conditions pertaining to the taking of affidavits or depositions. The requesting party shall bear the expense, however, where the Board enters an Order of Payment the Board may consider said expense as a reasonable expense incurred for reimbursement purposes.

13:75-1.14 Manner of payments

(a) All payments made by the Board shall be made in a lump sum amount, except in instances of death or protracted disability the Board shall exercise its discretion in determining whether payments are to be made in a lump sum or periodically.

1. Where periodic payments have been ordered in a death case, the Board shall verify the dependency and financial status of the claimant at least every six months. Upon discovering a change in circumstances, either by marriage or otherwise, the Board may adjust the award and payments accordingly.

2. Where periodic payments have been ordered in a protracted disability case, the Board may at least every six months verify the disability of the claimant to determine whether the claimant is entitled to continue to receive payments either in the amount awarded or in such amount as the Board deems appropriate.

3. Where periodic payments have been ordered the maximum period for said payments shall not exceed 60 months.

13:75-1.15 Decisions by the board

(a) In order to be eligible for review by the Board, all evidence must have been filed with the Board. If the procedure listed herein is not followed, the Board may in its discretion delay its decision or a hearing until the foregoing prerequisite has been completed with.

(b) The Board shall render its decision regarding the application within six months of receipt by the Board of all information necessary for it to render a final judgement in the mater.

13:75-1.16 Judicial review

Appeals from the Board shall be taken directly to the Appellate Division of the Superior Court pursuant to the rules set forth by the Supreme Court of the State of New Jersey in Rule 2:2-3.

13:75-1.17 Publication of claims

The Board, from time to time, may publish the record of claims and, at its discretion may divulge names of the claimants or other interested parties pursuant to the laws of the State governing disclosure of public records and the right to privacy.

13:75-1.18 Availability of forms and rules

The Board shall prepare and furnish, free of cost, and shall have available on request at the Board's offices, such forms and rules as the Board determines necessary to fulfill its statutory function. Such forms shall include, but not be limited to, claim petitions, emergency award applications, medical report and earnings record authorization, counselling services request, and subrogation agreements.

13:75-1.19 Monies received from other sources

(a) In determining the amount of compensation to be awarded, the Board shall take into consideration amounts

You're viewing an archived copy from the New Jersey State Library.

received or receivable from other "source or sources" by the victim or his dependents as a result of the offense or occurrence giving rise to the application.

(b) "Source or sources" means a source of benefits or advantages which the claimant has received in lieu of economic loss or which is readily available to the claimant from, but not limited to:

1. The offender;
2. The government of the United States or any agency thereof, the State or any of its political subdivisions, or an instrumentality of two or more states;
3. Social Security, Medicare, and Medicaid;
4. State required temporary non-occupational disability insurance;
5. Worker's Compensation;
6. Wage continuation programs of any employer;
7. Proceeds of a contract of insurance payable to the victim for loss which he sustained because of the criminally injurious conduct;
8. A contract providing prepaid hospital and other health care services or benefits for disability; or
9. All proceeds or recovery from any collateral action or claim based upon or arising out of the circumstances giving rise to claimant's petition before the Board.

i. Even though there exists a judgment, verdict, settlement, adjudication or any other resolution in and/or of said collateral action or claim which indicates or specifies that the proceeds or recovery are based upon economic loss, pain and suffering, punitive damages, or any other legal or economic loss classification, the Board, within its discretion, may consider said resolution in defining "source or sources".

13:75-1.20 Validity of rules if any portion declared invalid

If any portion of these rules, or the application thereof, shall be adjudged or declared to be invalid, or inoperative, or if by statutory amendment any rules hall lose its force and effect, such judgment or amendment shall not affect, impair or void the remainder of these rules.

13:75-1.21 Loss of earnings or support

Amounts awarded by the Board as weekly compensation for unreimbursable or unreimbursed losses in earnings or support shall not exceed the maximum prevailing weekly benefit payable under Worker's Compensation schedules in effect in this State at the time of the injury for those incidents which occurred between the effective date of the Criminal Injuries Compensation Act of 1971 and December 31, 1982. For injuries arising from incidents which occur upon or after January 1, 1983, the weekly rate shall be fixed by the Board pursuant to N.J.S.A. 52:4B-9.

13:75-1.22 Domestic help

(a) The reimbursement for expenses arising out of the hiring of domestic help to care for a minor child or for an adult who may or may not be the victims of the crime alleged in claimant's application, but who, nevertheless, are in need of such service and/or assistance as a direct result of said crime, shall be set by the Board.

(b) The Board shall make a determination in each case as to a reasonable period of time for the employment of domestic help, however, the maximum reimbursement for said period shall be $30.00 per day except that the total amount of such reimbursement shall not exceed $100.00 per week.

13:75-1.23 Lost member schedule

(a) Amounts awarded by the Board as compensation for lost or permanent loss of use of members shall not exceed the maximum prevailing benefit payable under Workers Compensation schedules in effect in this State at the time of the injury for those incidents which occurred between the effective date of the Criminal Injuries Act of 1971 and December 6, 1982 inclusive. However, the amount so awarded shall not exceed $10,000.00, the maximum award permitted by the statutory provisions of N.J.S.A. 52:4B-18 in effect at that time.

(b) For injuries arising from incidents which occur after December 6, 1982, the award for lost or permanent loss of use of members shall be fixed by the Board. The maximum award for such loss resulting from said incident, unless further amended by the Board, shall be as set forth in the following pay schedule.

1.	Loss of arm	-	$12,500.00
2.	Loss of leg	-	12,500.00
3.	Loss of hand	-	11,500.00
4.	Enucleation of one eye	-	11,000.00
5.	Loss of sight in one eye	-	10,500.00
6.	Loss of foot	-	10,500.00
7.	Loss of pinky	-	950.00
8.	Loss of ringfinger	-	1,400.00
9.	Loss of 2nd finger	-	1,900.00
10.	Loss of index finger	-	2,350.00
11.	Loss of thumb	-	3,550.00
12.	Loss of big toe	-	1,900.00
13.	Loss of remaining toes	-	700.00 (each)
14.	Loss of tooth	-	232.00 (per tooth)
15.	Loss of hearing: (75 percent of total hearing loss as determined by the Board shall be considered as total loss for the purpose of this section)		
	1 ear	-	$ 2,800.00
	2 ears	-	10,800.00

(c) The Board may, within its discretion, award a lump sum payment for such loss not provided for, herein, except that no award made pursuant to this section shall exceed $12,500.00 per lost member. The loss of any two body members identified in (b) 1 through 6 above shall entitle the victim to an award of $25,000.00.

13:75-1.24 Transportation costs

(a) Maximum reimbursement for transportation expenses incurred as a direct result of the incident giving rise to the claim shall not exceed $10.00 a day and shall include, but not be limited to, visits to treating physicians, health and care facilities, substitute travel costs other than ambulance or ambulatory mobile care services incurred due to a criminally-induced physical incapacity, and attendance at court proceedings for purposes of prosecuting the alleged offender. However, reimbursement for the purposes of this section does not include costs arising pursuant to N.J.A.C. 13:75-1.13.

1. Necessary and reasonable transportation expenses incurred such as railroad and airline fare which are a direct result of the incident and incidental to treating and caring for the victim may be reimbursed to claimant or to claimant's relatives as defined by N.J.S.A. 52:4B-2.

13:75-1.25 Emergency award

(a) The Board may grant an emergency award where such grants could help prevent financial hardship or stress which

You're viewing an archived copy from the New Jersey State Library.

might not otherwise arise, forcing persons, among other things, to go on welfare or be evicted from their homes because of inability to make rent or other payments while at the same time paying medical expenses, or where a person cannot maintain a reasonable level of health, safety and education for himself or his dependents.

(b) The claimant has the burden of showing the need for such emergency awards and must do so by the preponderance of the credible evidence. The Board shall consider all relevant factors in making its determination.

(c) The maximum amount of any one emergency award shall not exceed $500.00, however, the total amount of emergency funds awarded to an individual claimant shall not exceed $1,500.00.

(d) Any emergency awards made to a claimant shall be deducted from the final amount of compensation awarded to said claimant. Where, however, the final amount is less than the sum of the emergency awards provided, or where the Board determines that an applicant shall receive no compensation, the claimant shall return to the Board an amount of money equal to the difference or repay the full amount of said awards.

13:75-1.26 Subrogation

(a) If compensation is awarded to a claimant, the Board is subrogated to any cause of action claimant might have against the person or persons responsible for such personal injury or death and shall be entitled to bring an action against the same for the amount of the damage sustained by the claimant.

1. The Board may exercise its right only to the extent that compensation has been awarded by the Board.

2. Where the Board at its own discretion commences an action against the person or persons responsible for the victims injuries to recover monies compensated to a claimant, the claimant shall cooperate fully with the Board in pursuit of its action including, but not limited to, joining as a party to said action.

(b) As a prerequisite to bringing a collateral action to recover damages relating to criminally injurious conduct, for which compensation is also being claimed or has been awarded by the Board, the claimant shall give the Board prior written notice of the proposed action. After receiving the notice, the Board may at its discretion:

1. Join in the action as a party plaintiff to recover the compensation it has awarded; or

2. Require the claimant to execute an assignment to the Board for the amount of compensation it has awarded; or

3. Reserve its rights until such time as the action has been completed, or;

4. Waive by Board resolution its rights under this section.

(c) Where the claimant brings the collateral action and recovers monies which the Board seeks as reimbursement for compensation awarded claimant by the Board, claimant may deduct from compensation recovered in behalf of the Board a pro rata share of claimant's attorney fees in the collateral action.

(d) Where there are proceeds or recovery from any collateral action or claim within N.J.A.C. 13:75-1.19(b)9, the Board shall exercise its subrogation only as to claimant's net proceeds so recovered that are in excess of $1,000.00.

TRANSPORTATION

(a)

TRANSPORTATION OPERATIONS

Speed Limits for State Highways Route 179 in Hunterdon County

Proposed Amendment: N.J.A.C. 16:28-1.158

Authorized By: John P. Sheridan Jr., Commissioner, Department of Transportation.
Authority: N.J.S.A. 27:1A-5, 27:1A-6 and 39:4-98.

Interested persons may submit in writing data, views or arguments relevant to the proposal on or before May 16, 1984. These submissions, and any inquiries about submissions and responses, should be addressed to:

Charles L. Meyers
Administrative Practice Officer
Department of Transportation
1035 Parkway Avenue
CN 600
Trenton, NJ 08625

The Department of Transportation thereafter may adopt this proposal without further notice (see N.J.A.C. 1:30-3.5). The adoption becomes effective upon publication in the Register of a notice of adoption.

This proposal is known as PRN 1984-188.

The agency proposal follows:

Summary

This proposed amendment will establish maximum speed limits along Route 179 in the City of Lambertville, the Townships of East Amwell and West Amwell, Hunterdon County for the safe and efficient flow of traffic and the enhancement of public safety.

Based upon request from local officials the Department's Bureau of Traffic Engineering and Safety Programs conducted traffic investigations. The traffic investigations, which consisted of traffic count, traffic volumes and other statistical data, proved that the imposition of new and additional speed restrictions along the areas designated was warranted. The Department therefore proposes to amend N.J.A.C. 16:28-1.158 in compliance with the request from local officials and the traffic investigations.

Social Impact

This proposed amendment will implement speed limits along Route 179 in the City of Lambertville, the Townships of East and West Amwell, Hunterdon County for the safe and efficient flow of traffic and the enhancement of public safety in the areas designated. Signs will be installed to advise the motoring public.

Economic Impact

The Department and local officials will incur direct and indirect costs for their workforce for mileage, personnel and equipment requirements. Local officials will bear the costs of

You're viewing an archived copy from the New Jersey State Library.

installation of signs advising the motoring public. Motorists who violate the rules will be assessed the appropriate fine.

Full text of the proposal follows (additions indicated in boldface **thus**; deletions indicated in brackets [thus]).

16:28-1.158 Route 179

(a) The rate of speed designated for the certain parts of State highway Route 179 described [herein below] **in this section** shall be [and hereby is] established and adopted as the maximum legal rate of speed thereat:

1. For both directions of traffic:

[i. Zone one: 50 mph in West Amwell Township, East Amwell Township from the junction with Route US 202 to 375 feet north of Melbourn Lane (mile post 0.7); thence

ii. Zone two: 35 mph in West Amwell Township to 325 feet south of Larison Lane (milepost 1.2); thence

iii. Zone three: 45 mph to Route US 202-31.]

i. In the City of Lambertville, Hunterdon County:

(1) Zone one: 25 mph between the northerly end of the Delaware Bridge and Route 165 (milepost 0.05 to 0.39);

(2) Zone two: 40 mph between Route 165 and 475 feet north of Hancock Street (milepost 0.39 to 0.69);

(3) Zone three: 45 mph between 475 feet north of Hancock Street and the City of Lambertville - Township of West Amwell corporate line (milepost 0.69 to 0.90).

ii. In the Townships of West Amwell and East Amwell, Hunterdon County:

(1) Zone four: 50 mph between the West Amwell Township - City of Lambertville corporate line and 375 feet north of Melbourn Lane (milepost 0.90 to 6.24);

(2) Zone five: 35 mph between 375 feet north of Melbourn Lane and 325 feet south of Larison Lane (milepost 6.24 to 6.77);

(3) Zone six: 45 mph between 325 feet south of Larison Lane and Route U.S. 202 and 31 (milepost 6.77 to 7.46).

(a)

TRANSPORTATION OPERATIONS

Restricted Parking and Stopping Route US 1, US 206 and 159

Proposed Amendments: N.J.A.C. 16:28A-1.1, 1.57 and 1.84

Authorized By: John P. Sheridan Jr., Commissioner, Department of Transportation.

Authority: N.J.S.A. 27:1A-5, 27:1A-6, 39:4-138.1 and 39:4-139.

Interested persons may submit in writing data, views or arguments relevant to the proposal on or before May 16, 1984. These submissions, and any inquiries about submissions and responses, should be addressed to:

Charles L. Meyers
Administrative Practice Officer
Department of Transportation
1035 Parkway Avenue
CN 600
Trenton, NJ 08625

The Department of Transportation thereafter may adopt this proposal without further notice (see N.J.A.C. 1:30-3.5). The adoption becomes effective upon publication in the Register of a notice of adoption.

This proposal is known as PRN 1984-187.

The agency proposal follows:

Summary

These proposed amendments will establish "no parking" zones along Routes US 1 in the City of Trenton and Lawrence Township, Mercer County; US 206 in Princeton Borough, Mercer County and 159 in Montville Township, Morris County and Fairfield Township, Essex County for the safe and efficient flow of traffic and the enhancement of public safety.

Based upon requests from local officials, the Department's Bureau of Traffic Engineering and Safety Programs conducted traffic investigations. The traffic investigations which consisted of traffic counts, traffic volume and other statistical data proved that the establishment of "no stopping or standing" zones along the Routes indicated was warranted. The Department therefore proposes to amend N.J.A.C. 16:28A-1.1, 16:28A-1.57 and 16:28A-1.84 in compliance with the requests from local officials and the traffic investigations.

Social Impact

These amendments will restrict parking along Routes US 1 in the City of Trenton and Lawrence Township, Mercer County; US 206 in Princeton Borough, Mercer County and 159 in Montville Township, Morris County and Fairfield Township, Essex County for the safe and efficient flow of traffic and the enhancement of public safety. Appropriate signs will be installed advising the motoring public.

Economic Impact

The Department and local official will incur direct and indirect costs for its workforce for mileage, personnel, equipment requirements and the installation of signs along the respective route. Motorists who violate the regulations will be assessed the appropriate fines.

Full text of the proposal follows (additions indicated in boldface **thus**; deletions indicated in brackets [thus]).

16:28A-1.1 Route US 1

(a) The certain parts of State highway Route U.S. 1 described in [(a) of] this section shall be designated and established as "no parking" zones where stopping or standing is prohibited at all times except as provided in N.J.S.A. 39:4-139.

1.-3. (No change.)

4. No stopping or standing in the City of Trenton and Lawrence Township, Mercer County:

i. Along both sides:

(1) Beginning at a point of mile post 0.6 (Conovers Alley) City of Trenton and the southerly curb line of Quakerbridge Road (mile post 8.1) Lawrence Township, including all ramps and connections under the jurisdiction of the Commissioner of Transportation.

(2) (Whitehead Road Extension) - Beginning at the southerly abutment of the bridge over the Delaware and Raritan Canal and the northwesterly abutment of the bridge over the Assumpink Creek.

You're viewing an archived copy from the New Jersey State Library.

16:28A-1.57 Route U.S. 206

(a) [In accordance with the provisions of N.J.S.A. 39:4-138.1, the] **The** certain parts of State highway Route U.S. 206 described [herein below] **in this section** shall be [, and hereby are,] designated and established as "no parking" zones where stopping or standing is prohibited at all times except as provided in N.J.S.A. 39:4-139.

1.-13. (No change.)

14. No stopping or standing in Princeton Borough, Mercer County:

i. Between the hours of 8:00 A.M. to 10:00 A.M. and 4:00 P.M. to 6:00 P.M. beginning at a point 260 feet west of Nassau Street to a point 500 feet westerly therefrom.

(b) (No change.)

16:20A-1.84 Route 159

(a) The certain parts of State highway Route 159 described in [(a) of] this section are designated and established as "no parking" zones where stopping or standing is prohibited at all times except as provided in N.J.S.A. 39:4-139.

1. No stopping or standing in Montville Township, Morris County:

i. Along both sides:

(1) (No change.)

(2) Clinton Road-Oak Road for the entire length including all ramps and connections under the jurisdiction of the Commissioner of Transportation.

2. No stopping or standing in Fairfield Township, Essex County:

i. Along both sides:

(1) Clinton Road-Oak Road for the entire length including all ramps and connections under the jurisdiction of the Commissioner of Transportation.

(a)

TRANSPORTATION OPERATIONS

Restricted Parking and Stopping Route 4 in Hackensack

Proposed Amendment: N.J.A.C. 16:28A-1.4

Authorized By: John P. Sheridan Jr., Commissioner, Department of Transportation.

Authority: N.J.S.A. 27:1A-5, 27:1A-6, 39:4-138.1 and 39:4-199.

Interested persons may submit in writing data, views or arguments relevant to the proposal on or before May 16, 1984. These submissions, and any inquiries about submissions and responses, should be addressed to:

Charles L. Meyers
Administrative Practice Officer
Department of Transportation
1035 Parkway Avenue
CN 600
Trenton, NJ 08625

The Department of Transportation thereafter may adopt this proposal without further notice (see N.J.A.C. 1:30-3.5). The adoption becomes effective upon publication in the Register of a notice of adoption.

This proposal is known as PRN 1984-183.

The agency proposal follows:

Summary

The proposed amendment will establish "no parking" zones along Route 4 in Hackensack City, Bergen County for the safe on/off loading of passengers at bus stops, the safe and efficient flow of traffic and the enhancement of public safety.

Based upon request from the local officials, the Department's, Bureau of Traffic Engineering and Safety Programs conducted a traffic investigation into the matter. The results of that investigation substantiated the establishment of "no parking" zones.

The Department therefore proposes to amend N.J.A.C. 16:28A-1.4 in compliance with the request from local officials and the results of the traffic investigations.

Social Impact

The proposed amendment will restrict parking along Route 4 in the area designated for the safe and efficient flow of traffic, the enhancement of safety and the safe off/on loading of passengers at the designated bus stops in Hackensack City, Bergen County. Appropriate signs will be installed advising the motoring public.

Economic Impact

The Department and local officials will incur direct and indirect costs for its workforce for mileage, personnel and equipment requirements. The local officials will install appropriate signs designating "no parking bus stop" zones. Motorists in violation of the rules will be assessed the appropriate fines.

Full text of the proposal follows (additions indicated in boldface **thus**).

16:28A-1.4 Route 4

(a) (No change.)

(b) The certain parts of State highway Route 4 described in this subsection shall be designated and established as "no parking" zones where parking is prohibited at all times. In accordance with the provisions of N.J.S.A. 39:4-199 permission is granted to erect appropriate signs at the following established bus stops:

1.-11. (No change.)

12. Along the eastbound side in the City of Hackensack, Bergen County:

i. On the southerly side at Hackensack Avenue.

(1) From the easterly curb line of the exit ramp east of Hackensack Avenue to a point 105 feet east thereof.

13. Along the westbound side in the City of Hackensack, Bergen County:

i. On the northerly side at Hackensack Avenue.

(1) From the westerly curb line of the exit ramp west of Hackensack Avenue to a point 105 feet west thereof.

You're viewing an archived copy from the New Jersey State Library.

(a)

TRANSPORTATION OPERATIONS

Restricted Parking and Stopping Routes US 9 and I-280, Collector-Distributor Road

Proposed Amendments: N.J.A.C. 16:28A-1.7, and 1.89

Authorized By: John P. Sheridan Jr., Commissioner, Department of Transportation.
Authority: N.J.S.A. 27:1A-5, 27:1A-6, 39:4-138.1, 39:4-139 and 39:4-199.

Interested persons may submit in writing data, views or arguments relevant to the proposal on or before May 16, 1984. These submissions, and any inquiries about submissions and responses, should be addressed to:

Charles L. Meyers
Administrative Practice Officer
Department of Transportation
1035 Parkway Avenue
CN 600
Trenton, NJ 08625

The Department of Transportation thereafter may adopt this proposal without further notice (see N.J.A.C. 1:30-3.5). The adoption becomes effective upon publication in the Register of a notice of adoption.

This proposal is known as PRN 1984-185.

The agency proposal follows:

Summary

The proposed amendments will establish "no parking" zones along Route US 9 in Freehold Township, Monmouth County, and Route 280 (Collector-Distributor Rd.) in the City of Orange, Essex County for the safe and efficient flow of traffic, the enhancement of public safety and the safe on/off loading of passengers at designated bus stops.

Based upon requests from local officials, the Department's Bureau of Traffic Engineering and Safety Programs conducted traffic investigations. The traffic investigations which consisted of traffic count, traffic volume and other statistical data, proved that the establishment of "no parking" zones along the Routes and at designated bus stops was warranted.

The Department therefore proposes to amend N.J.A.C. 16:28A-1.7 and 16:28A-1.89 in compliance with the requests from local officials and the traffic investigations.

Social Impact

The proposed amendments will restrict parking along Route US 9, in Freehold Township, Monmouth County, and Route 280 (Collector-Distributor Rd.) in the City of Orange, Essex County for the safe and efficient flow of traffic and the enhancement of safety in the areas designated. Appropriate signs will be erected to advise the motoring public.

Economic Impact

The Department and local officials will incur direct and indirect costs for its workforce for mileage, personnel and equipment requirements. Motorists in violation of the regulations will be assessed appropriate fines. The Department will install appropriate signs advising the motoring public.

Full text of the proposal follows (additions indicated in boldface **thus**; deletions indicated in brackets [thus]).

16:28A-1.7 Route US 9

(a) (No change.)

(b) The certain parts of State highway Route US 9 described in this **subsection** shall be designated and established as "no parking" zones where parking is prohibited at all times. In accordance with the provisions of N.J.S.A. 39:4-199 permission is granted to erect appropriate signs at the following established bus stops:

1.-2. (No change.)

3. Along the northbound (easterly) side in Freehold Township, Monmouth County at:

i. (No change.)

ii. Near side bus stop:

(1) Elton-Adelphia Road (Co. Rd. 524)-Beginning at the southerly curb line of Elton-Adelphia Road (Co. Rd. 524) and extending 120 feet southerly therefrom.

iii. Mid-block bus stop:

(1) South Street - Beginning at a point 2720 feet north of the northerly curb line of South Street and extending 135 feet northerly therefrom.

4.-14. (No change.)

16:28A-1.89 Route 280

(a) The certain parts of State highway Route 280 (Collector Distributor Road) described in [(a) of] this section are designated and established as "no parking" zones where stopping or standing is prohibited at all times except as provided in N.J.S.A. 39:4-139.

1. No stopping or standing [(Collector-Distributor Road)] in the [Cities] **City** of Orange, [and East Orange,] Essex County:

[i. Along both sides of Route 280 (Collector-Distributor Roads.)]

i. Along both sides westbound for the entire length.

ii. Along the northerly side (eastbound) for the entire length.

iii. Along the southerly side (westbound) from the easterly curb line of South Day Street to its easterly terminus.

(b)

TRANSPORTATION OPERATIONS

Restricted Parking and Stopping Routes 70, US 1 Alternate, US 22, 37, 56, 63 and 24

Proposed Amendments: N.J.A.C. 16:28A-1.37, 1.97, 1.13, 1.76, 1.67 and 1.16

Proposed New Rule: N.J.A.C. 16:28A-1.98

Authorized By: John P. Sheridan Jr., Commissioner, Department of Transportation.

You're viewing an archived copy from the New Jersey State Library.

Authority: N.J.S.A. 27:1A-5, 27:1A-6, 39:4-138.1, 34:4-139 and 39:4-199.

Interested persons may submit in writing data, views or arguments relevant to the proposal on or before May 16, 1984. These submissions, and any inquiries about submissions and responses, should be addressed to:

Charles L. Meyers
Administrative Practice Officer
Department of Transportation
1035 Parkway Avenue
CN 600
Trenton, NJ 08625

The Department of Transportation thereafter may adopt this proposal without further notice (see N.J.A.C. 1:30-3.5). The adoption becomes effective upon publication in the Register of a notice of adoption.

This proposal is known as PRN 1984-184.

The agency proposal follows:

Summary

These proposed amendments will establish "no parking" zones along various highways for the safe and efficient flow of traffic and the on/off loading of passengers at designated bus stops.

Based upon requests from local officials, the Department's Bureau of Traffic Engineering and Safety Programs conducted traffic investigations. The results of the traffic investigations proved that the establishment of "no parking" and "no stopping or standing bus stop" zones were warranted.

The Department therefore proposes to amend N.J.A.C. 16:28A-1.37, 1.97, 1.13, 1.76, 1.67 and 1.16 and establish new rule N.J.A.C. 16:28A-1.98 in compliance with the requests from local officials and the traffic investigations. Appropriate signs will be installed to advise the motoring public.

The changes are summarized as follows:

N.J.A.C. 16:28A-1.37 establishes "no stopping or standing" zones along Route 70 in Medford Township , Burlington County.

N.J.A.C. 16:28A-1.97 establishes "no parking" zones at bus stops along Route US 1 Alternate in Lawrence Township, Mercer County. This section is proposed as a new rule elsewhere in this Register.

N.J.A.C. 16:28A-1.13 designates "no parking" zones along Route US 22 in Greenwich Township, Warren County, and at established bus stops in Union Township, Union County.

N.J.A.C. 16:28A-1.76 establishes "no parking" zones along both sides of Route 37 in Manchester Township, Ocean County.

N.J.A.C. 16:28A-1.67 establishes "no parking" zones at established bus stops along Route 63 in Palisades Park Borough, Bergen County.

N.J.A.C. 16:28A-1.98 designates the eastbound (southerly) side of Route 56 as "no parking" zones between Willow Street and Pine Street in Deerfield Township, Cumberland County.

N.J.A.C. 16:28A-1.16 establishes "no parking" zones at established bus stops along Route 24 in Morris Township, Morris County.

Social Impact

This proposed amendments and new rule will restrict parking along various State highways for the safe and efficient flow of traffic, the safe on/off loading of passengers at established bus stops and the enhancement of public safety. Appropriate signs will be installed to advise the motoring public.

Economic Impact

The Department and local officials will incur direct and indirect costs for their workforce for mileage, personnel, equipment requirements and the installation of signs along the applicable routes. Motorists in violation of the regulations will be assessed the appropriate fine.

Full text of the proposal follows (additions indicated in boldface **thus**; deletions indicated in brackets [thus]).

16:28A-1.37 Route 70

(a) The certain parts of State highway Route 70 described in this section are designated and established as "no parking" zones where stopping or standing is prohibited at all times except as provided in N.J.S.A. 39:4-139.

1.-6. (No change.)

7. No stopping or standing in Medford Township, Burlington County:

i. Along both sides:

(1) For the entire length within the corporate limits of Medford Township including all ramps and connections which are under the jurisdiction of the Commissioner of Transportation.

16:28A-1.97 Route US 1 Alternate

(a) (No change.)

(b) The certain parts of State highway Route US 1 Alternate described in this subsection are designated and established as "no parking" zones where parking is prohibited at all times. In accordance with the provisions of N.J.S.A. 39:4-199, permission is granted to erect appropriate signs at the following established bus stops:

1. Along the easterly (northbound) side in Lawrence Township, Mercer County:

i. Far side bus stops:

(1) Pear Street;

(2) Puritan Avenue;

(3) Putnam Avenue;

(4) Trumbull Avenue;

(5) Cherry Tree Lane;

(6) Whitehead Road;

(7) Bunker Hill Avenue;

(8) Lake Drive;

(9) Colonial Drive;

(10) Between a point 200 feet north of the northerly abutment of the bridge crossing the Shabakunk Creek and 100 feet northerly thereof.

2. Along the westerly (southbound) side in Lawrence Township, Mercer County:

i. Far side bus stops:

(1) President Avenue;

(2) Mayflower Avenue;

(3) Graf Avenue;

(4) Slack Avenue;

(5) Trumbull Avenue;

(6) Maplewood Avenue;

(7) Between points 220 feet north of, and 75 feet north of the northerly curb line of Lake Drive.

ii. Near side bus stop:

(1) Hope Street.

3. All far side bus stops shall be 105 feet in length, all near side bus stops shall be 120 feet in length and all mid-block bus

You're viewing an archived copy from the New Jersey State Library.

stops shall be 130 feet in length, measured from the curb line of the intersecting street, or the prolongation of the curb line of the street which intersects, where the bus stops are established.

16:28A-1.13 Route US 22

(a) The certain parts of State highway Route US 22, described in [(a) of] this section shall be designated and established as "no parking" zones where stopping or standing is prohibited at all times except as provided in N.J.S.A. 39:4-139.

1.-8. (No change.)

9. No stopping or standing in Greenwich Township, Warren County:

i. Westbound side:

(1) Beginning at a point 2080 feet from the westerly curb line of County Road 519 and extending 205 feet west thereof.

(b) The certain parts of State highway Route US 22 described in this section shall be designated and established as "no parking" zones where parking is prohibited at all times. In accordance with the provisions of N.J.S.A. 39:4-199 permission is granted to erect appropriate signs at the following established bus stops:

1.-5. (No change.)

6. Along the westbound (northerly) side in Union Township, Union County:

i. Near side bus stop:

(1) Springfield Road-Beginning at the easterly curb line of Springfield Road and extending 150 feet easterly therefrom.

7. Along the eastbound (southerly) side in Union Township, Union County:

i. Mid-block bus stop:

(1) Jefferson Avenue-Beginning at a point 800 feet west of the westerly curb line of Jefferson Avenue and extending 135 feet westerly therefrom.

16:28A-1.76 Route 37

(a) The certain parts of State highway Route 37 described in [(a) of] this section are designated and established as "no parking" zones where stopping or standing is prohibited at all times except as provided in N.J.S.A. 39:4-139.

1. (No change.)

2. No stopping or standing in Manchester Township, Ocean County:

i. Along both sides:

(1) For the entire length within the corporate limits of Manchester Township including all ramps and connections thereto which are under the jurisdiction of the Commissioner of Transportation.

16:28A-1.67 Route 63

(a) The certain parts of State highway Route 63 described in [(a) of] this subsection are designated and established as "no parking" zones where stopping or standing is prohibited at all times except as provided in N.J.S.A. 39:4-139.

1.-3. (No change.)

(b) The certain parts of State highway Route 63 described in this subsection shall be designated and established as "no parking" zones where parking is prohibited at all times. In accordance with the provisions of N.J.S.A. 39:4-199 permission is granted to erect appropriate signs at the following established bus stops.

1. Along Bergen Boulevard southbound on the westerly side in Palisades Park Borough, Bergen County:

i. Near side bus stop:

(1) Central Boulevard-Beginning at the northerly curb line of Central Boulevard and extending 115 feet northerly therefrom.

ii. Far side bus stop:

(1) 12th Street-Beginning at a point 178 feet from the southerly gore area of 12th Street and Route 63 to a point 135 feet southerly therefrom.

16:28A-1.98 Route 56

(a) The certain parts of State highway Route 56 described in this section shall be designated and established as "no parking" zones where stopping or standing is prohibited at all times except as provided in N.J.S.A. 39:4-139.

1. No stopping or standing in Deerfield Township, Cumberland County:

i. Along the eastbound (southerly) side, between Willow Street and Pine Street, including all ramps and connections under the jurisdiction of the Commissioner of Transportation.

2. (Proposed in this Register.)

16:28A-1.16 Route 24

(a)-(c) (No change.)

(d) The certain parts of State highway Route 24 described in this subsection shall be designated and established as "no parking" zones where parking is prohibited at all times. In accordance with the provisions of N.J.S.A. 39:4-199 permission is granted to erect appropriate signs at the following established bus stops:

1. Along the south side (eastbound) of (Madison Avenue) in Morris Township, Morris County:

i. Far side bus stop:

(1) Pitney Place-Beginning at the easterly curb line of Pitney Place and extending 100 feet easterly therefrom.

ii. Near Side bus stop:

(1) Canfield Road-Beginning at the westerly curb line of Canfield Road and extending 100 feet westerly therefrom (mile post 45.7).

(2) Canfield Road-Beginning at the westerly curb line of Canfield road and extending 100 feet westerly therefrom (mile post 46.2).

2. Along the north side (westbound) (Madison Avenue) in Morris Township, Morris County:

i. Convent Road-Beginning at the westerly curb line of Convent Road and extending 105 feet easterly therefrom.

ii. For side bus stop:

(1) Punch Bowl Road-Beginning at the westerly curb line of Punch Bowl Road and extending 100 feet westerly therefrom.

(2) Madison Court-Beginning at the prolongation of the westerly curb line of Madison Court and extending 185 feet westerly therefrom.

You're viewing an archived copy from the New Jersey State Library.

(a)

TRANSPORTATION OPERATIONS

Restricted Parking and Stopping Routes U.S. 1 Alternate and 45

Proposed New Rule: N.J.A.C. 16:28A-1.97 Proposed Amendment: N.J.A.C. 16:28A-1.31

Authorized By: John P. Sheridan Jr., Commissioner, Department of Transportation.
Authority: N.J.S.A. 27:1A-5, 27:1A-6, 39:4-138.1 and 39:4-139.

Interested persons may submit in writing data, views or arguments relevant to the proposal on or before May 16, 1984. These submissions, and any inquiries about submissions and responses, should be addressed to:

Charles L. Meyers
Administrative Practice Officer
Department of Transportation
1035 Parkway Avenue
CN 600
Trenton, NJ 08625

The Department of Transportation thereafter may adopt this proposal without further notice (see N.J.A.C. 1:30-3.5). The adoption becomes effective upon publication in the Register of a notice of adoption.

This proposal is known as PRN 1984-184.

The agency proposal follows:

Summary

This proposed amendment and new rule will establish "no stopping or standing" zones along Routes U.S. 1 Alternate in Lawrence Township, Mercer County and Route 45 in Harrison Township, Gloucester County, for the efficient flow of traffic and the enhancement of traffic safety.

Based upon requests from the local authorities the Department's Bureau of Traffic Engineering and Safety Programs conducted traffic engineering investigations in the designated areas. The traffic investigations and data obtained indicated that the installation of signs restricting parking and establishing "no stopping or standing" zones would facilitate traffic flow and enhance safety in the areas.

The Department therefore proposes to amend N.J.A.C. 16:28A-1.31 regarding "no stopping or standing" zones along Route 45 in Harrison Township, Gloucester County and proposes new rule N.J.A.C. 16:28A-1.97 (see the proposed amendment to 16:28A-1.97, this Register) establishing "no stopping or standing" zones along Route U.S. 1 Alternate in Lawrence Township, Mercer County, in compliance with requests from the local officials and traffic investigations.

Social Impact

The proposed amendment and new rule will establish "no parking" zones along Route U.S. 1 Alternate in Lawrence Township, Mercer County and Route 45 in Harrison Township, Gloucester County for the safe and efficient flow of traffic and the enhancement of traffic safety. Appropriate signs will be erected advising the motoring public.

Economic Impact

The Department and local government will incur direct and indirect costs for its workforce for mileage, personnel and equipment requirements. Violators of the regulations will be assessed the appropriate fines.

Full text of the proposal follows (additions indicated in boldface **thus**; deletions indicated in brackets [thus]).

16:28A-1.97 Route U.S. 1 Alternate

(a) The certain parts of State highway Route U.S. 1 Alternate described in this subsection shall be designated and established as "no parking" zones where stopping or standing is prohibited at all times except as provided in N.J.S.A. 39:4-139.

1. No stopping or standing in Lawrence Township, Mercer County:

i. Along both sides:

(1) Beginning at a point of mile post 0.0 at the northerly intersection of the Brunswick Circle to the northerly curbline of Carnegie Road (mile post 2.31) Lawrence Township, including all ramps and connections under the jurisdiction of the Commissioner of Transportation.

(b) (Proposed in this Register.)

16:28A-1.31 Route 45

(a) The certain parts of State highway Route 45 described in this section are designated and established as "no parking" zones where stopping or standing is prohibited at all times except as provided in N.J.S.A. 39:4-139.

1. No stopping or standing in Harrison Township, [Goucester] **Gloucester** County:

i. Along the northbound side:

(1) From the northerly curb line of East Church Street to the southerly curb line of Route US 322 [(south intersection);] **(southerly extension).**

[(2) From the prolongation of the northerly curb line to Route US 322 (north intersection) to the southerly curb line of Earlington Avenue.]

ii. (No change).

iii. Along both sides:

(1) From the northerly intersection of Route US 322 to Colson Lane.

2.-4. (No change.)

(b) (No change.)

(b)

TRANSPORTATION OPERATIONS

Restricted Parking and Stopping Route 56

Proposed Amendment: N.J.A.C. 16:28A-1.98

Authorized By: John P. Sheridan Jr., Commissioner, Department of Transportation.
Authority: N.J.S.A. 27:1A-5, 27:1A-6, 39:4-138.1 and 39:4-139.

You're viewing an archived copy from the New Jersey State Library.

Interested persons may submit in writing data, views or arguments relevant to the proposal on or before May 16, 1984. These submissions, and any inquiries about submissions and responses, should be addressed to:

Mr. Charles L. Meyers
Administrative Practice Officer
Department of Transportation
1035 Parkway Avenue
CN 600
Trenton, NJ 08625

The Department of Transportation thereafter may adopt this proposal without further notice (see N.J.A.C. 1:30-3.5). The adoption becomes effective upon publication in the Register of a notice of adoption.

This proposal is known as PRN 1984-209.

The agency proposal follows:

Summary

This proposed amendment will establish "no parking" zones along Route 56 in Upper Deerfield Township, Cumberland County for the safe and efficient flow of traffic and the enhancement of public safety.

Based upon a request from local officials the Department's Bureau of Traffic Engineering and Safety Programs conducted a traffic investigation. The investigation proved that the establishment of "no stopping or standing" zones was warranted.

In compliance with the request from local officials and the results of the traffic investigation, the Department proposes to add (a)2 to N.J.A.C. 16:28A-1.98, which is a proposed new rule. See the notice in this Register.

Social Impact

This proposed amendment will restrict parking along the west side of Route 56 in Upper Deerfield Township, Cumberland County by the establishment of "no stopping or standing" zones for the safe and efficient flow of traffic and the enhancement of public safety. Appropriate signs will be installed to advise the motoring public.

Economic Impact

The Department and local officials will incur direct and indirect costs for their workforce for mileage, personnel and equipment requirements. The Department will install signs advising the motoring public. Motorists in violation of the regulations will be assessed the appropriate fines.

Full text of the proposal follows (additions indicated in boldface **thus**).

16:28A-1.98 Route 56

(a) The certain parts of State highway Route 56 described in this section shall be designated and established as "no parking" zones where stopping or standing is prohibited at all times except as provided in N.J.S.A. 39:4-139.

1. (No change.)

2. No stopping or standing in Upper Deerfield Township, Cumberland County:

i. Along the west side (Landis Avenue):

(1) Between County Road 611 (Centerton Road) to State highway Route 77.

(a)

TRANSPORTATION OPERATIONS

Miscellaneous Traffic Rules
Mid-Block Crosswalk on Route US 206

Proposed New Rule: N.J.A.C. 16:30-10.2

Authorized By: John P. Sheridan Jr., Commissioner, Department of Transportation.
Authority: N.J.S.A. 27:1A-5, 27:1A-6 and 39:4-34.

Interested persons may submit in writing data, views or arguments relevant to the proposal on or before May 16, 1984. These submissions, and any inquiries about submissions and responses, should be addressed to:

Charles L. Meyers
Administrative Practice Officer
Department of Transportation
1035 Parkway Avenue
CN 600
Trenton, NJ 08625

The Department of Transportation thereafter may adopt this proposal without further notice (see N.J.A.C. 1:30-3.5). The adoption becomes effective upon publication in the Register of a notice of adoption.

This proposal is known as PRN 1984-186.

The agency proposal follows:

Summary

This proposed new rule, N.J.A.C. 16:30-10.2, will establish a mid-block crosswalk along Route US 206 in Chester Borough, Morris County for the enhancement of public safety. It will also establish a regular designated area for pedestrians to cross a roadway at other than an area which is controlled and directed by a police officer or a traffic control signal.

Based upon a request from local officials, the Department's Bureau of Traffic Engineering and Safety Programs conducted traffic investigations to determine the best method to control jaywalking. The traffic investigations which consisted of traffic volumes, traffic counts and other statistical data proved that the establishment of a mid-block crosswalk in the area designated was warranted.

The Department therefore proposes new rule N.J.A.C. 16:30-10.2 establishing a mid-block crosswalk in compliance with the request from local officials and the data obtained from the traffic investigations. Appropriate signs will be installed to advise the motoring public.

Social Impact

The proposed new rule will establish a mid-block crosswalk for the enhancement of the safety of pedestrians, who cross the roadway at other than an area normally controlled either by a police officer or traffic control signal. Additionally, it will provide and establish a regular designated area, where pedestrians may safely cross the roadway, rather than having to jaywalk. Appropriate signs will be installed to advise the motoring public of pedestrian crossing.

You're viewing an archived copy from the New Jersey State Library.

Economic Impact

The proposed new rule will cause the Department and local officials to incur direct and indirect costs for their workforce for mileage, personnel and equipment requirements. The Department will bear the costs involved in the installation and obtaining of signs to advise the motoring public. Motorist who violate the regulations will be assessed the fines imposed.

Full text of the proposed new rule follows.

16:30-10.2 Route US 206

(a) Under the provisions of N.J.S.A. 39:4-34, the certain part of Route US 206 described in this section shall be designated as a Mid-Block Crosswalk.

1. Along Route US 206 in Chester Borough, Morris County:

i. From a point 390 feet south of the southerly curb line of Maple Avenue to a point 10 feet southerly therefrom, measured along the easterly curb line.

(a)

TRANSPORTATION OPERATIONS

Turns
Route US 206

Proposed Amendment: N.J.A.C. 16:31-1.1

Authorized By: John P. Sheridan Jr., Commissioner, Department of Transportation.

Authority: N.J.S.A. 27:1A-5, 27:1A-6, and 39:4-183.6.

Interested persons may submit in writing data, views or arguments relevant to the proposal on or before May 16, 1984. These submissions, and any inquiries about submissions and responses, should be addressed to:

Charles L. Meyers
Administrative Practice Officer
Department of Transportation
1035 Parkway Avenue
CN 600
Trenton, NJ 08625

The Department of Transportation thereafter may adopt this proposal without further notice (see N.J.A.C. 1:30-3.5). The adoption becomes effective upon publication in the Register of a notice of adoption.

This proposal is known as PRN 1984-182.

The agency proposal follows:

Summary

This proposed amendment will establish no left turn movements along Route US 206 in Hillsborough Township, Somerset County during specific hours for the safe and efficient flow of traffic and the enhancement of the safety and well being of the populace. This amendment rescinds previous regulations published at 15 N.J.R. 522(b) on April 4, 1983, and adopted at 15 N.J.R. 1037(c).

Based upon requests from local officials, the Department's Bureau of Traffic Engineering conducted engineering studies in the specific area. The engineering studies and data obtained indicated that the regulation of left turn movements during specific hours would facilitate traffic flow and enhance safety along the highway system.

The Department therefore proposes to amend N.J.A.C. 16:31-1.1 establishing no left turn movements during specific hours in compliance with request from local officials and engineering studies.

Social Impact

The proposed amendment will prohibit the left turn movements in the area indicated for the safe and efficient flow of traffic during specified hours and the enhancement of the safety and well being of the populace. Appropriate signs will be installed to advise the motoring public.

Economic Impact

The Department and local officials will incur direct and indirect costs for its workforce for mileage, personnel and equipment requirements. Signs will be installed by the Department forces. Motorists who violate the regulations will be assessed appropriate fines.

Full text of the proposal follows (additions indicated in boldface **thus**; deletions indicated in brackets [thus]).

16:31-1.1 Route US 206

(a) Turning movements of traffic on certain parts of State highway Route US 206 described in this section are regulated as follows:

1.-2. (No change.)

3. [No left turn north bound to West onto Valley Road, Hillsborough Township, Somerset County.] **No left turn north to west onto Valley Road, Hillsborough Township, Somerset County between the hours of 7:00 A.M. and 9:00 A.M. and 4:00 P.M. and 6:30 P.M.**

(b)

AERONAUTICS

Air Safety and Hazardous Zoning

Proposed New Rule: 16:62

Authorized By: John P. Sheridan Jr., Commissioner, Department of Transportation.

Authority: N.J.S.A. 27:1A-5, 27:1A-6, 6:1-29, 6:1-32 and "Air Safety and Hazardous Zoning Act of 1983," P.L. 1983, C.260.

Interested persons may submit in writing data, views or arguments relevant to the proposal on or before May 16, 1984. These submissions, and any inquiries about submissions and responses, should be addressed to:

Charles L. Meyers
Administrative Practice Officer
Department of Transportation

You're viewing an archived copy from the New Jersey State Library.

1035 Parkway Avenue
CN 600
Trenton, New Jersey 08625

The Department of Transportation thereafter may adopt this proposal without further notice (see N.J.A.C. 1:30-3.5). The adoption becomes effective upon publication in the New Jersey Register of a notice of adoption.

This proposal is known as PRN 1984-208.

The agency proposal follows:

Summary

Airport hazards endanger the lives and property of the users of airports and of occupants of land in the vicinity thereof, and also reduce the size of the area available for landing, taking-off and maneuvering of aircraft, thus tending to destroy or impair the utility of airports and the public benefit therein.

The creation or establishment of an airport hazard is a public nuisance and an injury to the State and community served by the airport in question; therefore, it is necessary, in the interest of the public health, public safety, and general welfare, that the creation or establishment of airport hazards be prevented.

The proposed new rules have been prepared to implement the provisions and purposes of the Air Safety and Hazardous Zoning Act of 1983, P.L. 1983 Chapter 260, approved July 7, 1983.

The Act recognizes that special land use controls and restrictions on vertical development should be implemented for the areas adjacent to airports open to the public. The legislature has mandated that the further development of lands adjacent to these airports must be done in a manner to prevent the development of potential hazards and to encourage compatible adjoining land use and land use planning. These objectives are to be implemented under the general supervision of the Department of Transportation, but within the overall context of the Municipal Land Use Law which the Air Safety and Hazardous Zoning Act supplements. It is significant to point out that neither the Act nor the rules and regulations promulgated thereunder may require that any structure or tree not conforming to standards at the time of adoption or amendment be removed, lowered, or otherwise altered. Neither the Act nor the rules and regulations promulgated thereunder may interfere with the continuance of any nonconforming use.

The standards for vertical development established by the Department are based upon a modified version of the Federal minimum standards for vertical height development around airports. The Department found it necessary in its evaluation of the Federal standard to allow somewhat more permissive vertical criteria than the Federal standard might allow so as to avoid any unwarranted infringement upon lands affected by the provisions of this chapter. The resulting State minimum standards, while according a substantial level of protection to the airport-using public, nevertheless provide significant development options for areas affected by the Air Safety and Hazardous Zoning Act. Relief in hardship situations is additionally available within the context of these rules.

The standards for land use adjoining affected airports specifically permit a municipality to implement, at its discretion, a wide range of land use options. Additionally, the Department's standards specifically prohibit certain land uses within the affected areas because they may promote potentially unsafe conditions. The regulatory program established by the Department is intended to provide significant guidance to local municipalities in implementing the provisions of the Act, while at the same time preserving the greatest possible degree of local municipal discretion and control in land use matters.

Zoning and land use schemes around airports vary widely across the State. In some locations the substance of the zoning and land use schemes has served both to confound the long term utility of the air portion of the transportation infrastructure and to create adjoining land use conflicts. The rules implementing the provisions of the Air Safety and Hazardous Zoning Act will serve to reduce and correct, over time, these undesirable situations.

The subchapters of the proposed new rule are summarized as follows:

N.J.A.C. 16:62-1, provides definitions of terms used throughout the chapter and describes general requirements and provisions.

N.J.A.C. 16:62-2, prescribes requirements for municipalities to follow regarding delineated airport hazard areas.

N.J.A.C. 16:62-3, outlines airport hazard areas and the methods used to delineate airport hazard areas.

N.J.A.C. 16:62-4, defines the minimum obstruction standards within airport hazard areas.

N.J.A.C. 16:62-5, prescribes standards for land use around airports.

N.J.A.C. 16:62-6, outlines the permit requirements.

N.J.A.C. 16:62-7, describes the provisions for amended and special airports standards.

N.J.A.C. 16:62-8, prescribes the penalty for violation of the rules.

N.J.A.C. 16:62-9, contains figures and appendices relating to the rules.

Social Impact

The rules contained herein will reduce the development of adjacent noncompatible land uses. Because the local government unit is established as the site of primary level decision making authority, those individuals closest to the local situations will have significant control over the land use choices made. This plan allows for the implementation of uniform overall principles conditioned by specific local concerns.

Economic Impact

These rules will have an economic impact by redirecting the focus of land use around airports. By reducing land use conflicts, these rules will enhance the economic vitality of lands adjacent to airports. The wide variety of options available to implementing municipalities should encourage the full economic development of affected lands.

The citizens of the State will benefit substantially from the continued vitality of the air transportation segment of the State's transportation infrastructure. The continued vitality of the air transportation network is a significant State resource in the ongoing development of modernized industry and commerical interaction with centers of trade and commerce.

There are new permit fees created under these rules. The initial fee is set at $75.00. There are provisions, however, for the Commissioner of Transportation to reduce this charge to $25.00 for applications he deems to be routine. The clear emphasis of the overall regulatory program on prompt and timely action on permit applications, should minimize costly time delays for developers.

You're viewing an archived copy from the New Jersey State Library.

Environmental Impact

The enviromental impact of this new chapter is positive. The provisions of this chapter which serve to segregate noise generating uses of land from noise sensitive uses of land will contribute considerably to the quality of life of those persons within the airport zones. These rules will also serve to stimulate additional local land use planning and discussion in order to assure environmentally sound land use around airports.

The wide range of development options afforded municipalities under this chapter will preclude interference with existing municipal environmental planning or projects. The project review provisions of this chapter establish a second review of prohibited development projects which will aid in the identification of environmentally oriented issues or conditions. This chapter serves to strengthen the environmental protections contained within the Municipal Land Use Law.

Full text of the proposed new rule follows.

CHAPTER 62
AIR SAFETY AND HAZARDOUS ZONING

SUBCHAPTER 1. AIRPORT HAZARDS

16:62-1.1 Definitions

The following words and terms, when used in this chapter, shall have the following meanings, unless the context clearly indicates otherwise:

"Airport" means any area of land or water, or both, designed and set aside for the landing and taking-off of fixed wing aircraft, utilized or to be utilized by the general public for such purposes, publicly or privately owned, and licensed by the Commissioner as a public use airport or landing strip, or an area which has been determined by the Commissioner to be likely to be so licensed within one year of the determination.

"Airport hazard" means:

1. Any use of land or water, or both, which may create a dangerous condition for persons or property in or about an airport or aircraft during landing or taking-off at an airport; or

2. Any structure or tree which obstructs the airspace required for the flight of aircraft in landing or taking-off at an airport.

"Airport Hazard Area" means any area of land or water, or both, upon which an airport hazard might be created or established if not prevented as provided by this chapter.

"Commissioner" means the Commissioner of the Department of Transportation.

"Department" means the Department of Transportation.

"Development" means the construction, creation, or establishment of any structure or planting of a tree.

"Director" means the Director of the Division of Aeronautics.

"Division" means the Division of Aeronautics.

"Fast-track" means an accelerated system of application review procedures.

"Person" means any corporation, company, association, society, firm, partnership, joint stock company, individual, the State, and all political subdivisions of the State or any agencies or instrumentalities thereof.

"Structure" means any object constructed or installed by man, including, but not limited to, buildings, towers, smokestacks, chimneys, and overhead transmission lines.

"Tree" means an object of natural growth.

16:62-1.2 General requirements and provisions

(a) Under the Air Safety and Hazardous Zoning Act of 1983, this chapter establishes minimum standards for the control of airport and aerounautical hazards, and standards for land use adjacent to airports, which the municipalities of this State shall implement. These standards are minimum State standards, and municipalities may adopt more rigorous standards for control of the areas and condition under the provisions of the Municipal Land Use Law. The Commissioner may adopt under N.J.A.C. 16:72-7 a special or amended standard for an airport when it is determined that local conditions require it.

(b) No person shall build, rebuild, create or cause to be built, rebuilt or created any object or structure, or plant, or cause to be planted or permit to grow any tree or vegetation, which will interfere with, diminish, change or obstruct the airspace or landing and take-off area available for the landing and take-off of aircraft at public use airports.

(c) Nothing in this chapter shall be construed as limiting the power of the Commissioner regarding the design, placement, location, or operation of airports or other aeronautical facilities.

(d) Municipalities of this State are required to implement and maintain land use and aeronautical hazard control ordinances in accordance with the provisions of this chapter. These ordinances are subject to review by the Commissioner of Transportation.

(e) No ordinance adopted under this chapter shall require the removal or lowering of, or other change or alteration of any structure or tree not conforming to the rules when this chapter was adopted, or otherwise interfere with the continuance of any nonconforming use.

(f) Airport hazard areas adjacent to airports not licensed by the State of New Jersey are not subject to the specific provisions of this chapter. Airports not licensed by the State of New Jersey include Newark International Airport, Teterboro Airport, Atlantic City Airport near Pomona, New Jersey, and military airports. Although the specific provisions of this chapter may not apply to areas surrounding non State licensed airports open to the public, this in no way limits the power of municipalities to enact substantially similar ordinances governing the areas in accordance with the purposes of the Municipal Land Use Law.

(g) All persons are hereby put on notice that the standards of this chapter are minimum Statewide standards. Implementation of these standards does not necessarily guarantee a prudent and comprehensive land use and hazard program suitable for all airports.

(h) In order to expedite the handling of routine applications for permits where the resulting development would have negligible adverse impact under the purposes of this chapter, the Commissioner may institute by written order, fast-track or five day application review procedures. The Commissioner may also establish by written order, classifications of permit applications, and for certain routine applications, a permit application fee of $25.00.

(i) The mechanisms provided for control of aeronautical hazards within the "Air Safety and Hazardous Zoning Act" rely substantially upon local zoning regulations. The powers to enact traditional zoning ordinances upon navigable waters are constrained; and the operational characteristics and jurisdictions of water facilities may differ substantially from many land facilities; the provisions of this chapter do not apply to seaplane or water facilities unless otherwise provided for by the Commissioner in N.J.A.C. 16:62-7.1 of this chapter. Any

You're viewing an archived copy from the New Jersey State Library.

interested person may petition the Commissioner for review of Air Safety and Hazardous Zoning issues under the operation of any Public Use Seaplane Facility.

(j) The Director may provide for informal reviews of permit applications prior to their formal submission to the Department.

(k) Within the provisions of this Chapter, Interstate highways are considered to be a 17 foot vertical development, other public roads are considered to be a 15 foot vertical development, a private road is considered to be a 10 foot vertical development, and railroads are considered to be a 23 foot vertical development.

(l) The review of applications under this chapter is limited to the purposes of this chapter as they relate to the public health, safety and welfare.

SUBCHAPTER 2. MUNICIPALITIES

16:62-2.1 Municipal requirements

(a) Each municipality which contains within its boundaries any part of a delineated airport hazard area, as defined by N.J.A.C. 16:62-3.1, shall enact an ordinance or ordinances incorporating the standards promulgated under this chapter. These standards shall also become a part of the masterplan of development for each affected municipality which has a masterplan.

(b) Each municipality affected under this chapter shall transmit to the Division at time of adoption, amendment, or when requested, a valid copy of the ordinance(s) and a local development masterplan shall be transmitted to the following address:

New Jersey Department of Transportation
Division of Aeronautics
Air Safety and Hazardous Zoning Permits
1035 Parkway Avenue
CN 600
Trenton, New Jersey 08625

(c) The Director will review ordinances and masterplans enacted by municipalities to implement the standards of this chapter.

(d) No variance, or other relief from the standards promulgated by or under this chapter may be granted by a municipality to itself or any person except upon the condition that the variance or relief is contingent upon the issuance of a permit allowing the variance or relief by the Commissioner.

(e) Municipalities which contain within their boundaries airports regulated by the provisions of this chapter, may not hereafter classify those airports as non-conforming land uses within the context of their ordinances or master plans of development. Those municipalities which may currently classify an airport as non-conforming land use within the context of their ordinances or master plans of development, shall amend those ordinances or plans to eliminate that non-conforming status.

SUBCHAPTER 3. DELINEATION OF AIRPORT HAZARD AREAS

16:62-3.1 Delineation of Airport Hazard Areas

This subchapter defines those areas which are Airport Hazard Areas as regulated by this chapter and describes the methodology used to delineate Airport Hazard Areas.

16:62-3.2 Methodology used to delineate Airport Hazard Areas

(a) Airport Hazard Areas are delineated by the establishment of subzones of standard sizes around and off the ends of runways and airports open to the public.

(b) The two types of subzones comprising an Airport Hazard Area are the RUNWAY SUBZONE and the RUNWAY END SUBZONE.

1. The RUNWAY SUBZONE of an Airport Hazard Area is an area, rectangular in shape, which has a common and shared centerline in respect to the runway it geometrically surrounds.

i. The width of the RUNWAY SUBZONE of the Airport Hazard Area from its longitudinal sides to the runway centerline is 1175 feet. This gives the RUNWAY SUBZONE of the Airport Hazard Area a total longitudinal width of 2350 feet along its entire length.

ii. The length of the RUNWAY SUBZONE of the Airport Hazard Area is determined by the location of the physical runway end and/or the relationship of the physical runway end along its extended centerline to the property or easement line of the airport. The length of the RUNWAY SUBZONE of the Airport Hazard Area is the length of the runway between the physical ends of the runways. When the physical end of a runway is closer than 200 feet (along its extended centerline) to the property or easement line of the airport, the length of the RUNWAY SUBZONE of the Airport Hazard Area shall not be measured from that physical runway end. Instead it should be measured from that point on that runway end on the runway centerline 200 feet inside of the airport property or easement line. In this case, a portion of the end of a runway may extend beyond the bounds of the RUNWAY SUBZONE of the Airport Hazard Area.

iii. The methodology used to delineate the RUNWAY SUBZONE of an Airport Hazard Area is further graphically depicted in Figure 1.

2. The RUNWAY END SUBZONE at an Airport Hazard Area is an area, trapezoidal in its geometric construction, which is located at the end of each RUNWAY SUBZONE of an Airport Hazard Area along, and bisected by, the extended centerline of the runway.

i. The length of the RUNWAY END SUBZONE of an Airport Hazard Area is 3000 feet measured from the end of the RUNWAY SUBZONE of an Airport Hazard Area outward from the runway along the extended centerline of the runway. This extended centerline bisects the RUNWAY END SUBZONE of the Airport Hazard Area.

ii The width of the RUNWAY END SUBZONE of an Airport is 2350 feet at its base which is co-located with the end of the RUNWAY SUBZONE of an Airport Hazard Area. The width of the RUNWAY END SUBZONE narrows uniformly outwardly along the 3000 feet length of the RUNWAY END SUBZONE such that its final width is 850 feet at the outward base of the subzone. The runway extended centerline bisects the width measures along the entire length of the RUNWAY END SUBZONE of the Airport Hazard Area.

iii. The methodology used to delineate the RUNWAY END SUBZONE of an Airport Hazard Area is further graphically depicted in Figure 2.

(c) The overall Airport Hazard Area for an airport is geometrically constructed by defining and locating the RUNWAY SUBZONE and RUNWAY END SUBZONES for each runway open to the public on an airport open to the public. The outermost borders of the subzones comprise the outermost boundary of the Airport Hazard Area. The area within those outermost boundaries is that area regulated by the pro-

You're viewing an archived copy from the New Jersey State Library.

visions of this chapter and is the Airport Hazard Area for an airport.

(d) The methodology used to delineate the overall construction and outermost boundaries of the Airport Hazard Area for an airport is further graphically depicted in Figure 3.

SUBCHAPTER 4. ORDINANCE STANDARDS

16:62-4.1 Minimum obstruction ordinance standards

(a)This subchapter defines the minimum obstruction ordinance standards which a municipality must enact pursuant to the provisions of this chapter, and describes the methodology used to define vertical development allowed within an Airport Hazard Area.

(b) Notwithstanding the provisions of this chapter, the primary regulation of airport development, airport property use, internal dimensional criteria, and vertical development on airports is accomplished within N.J.A.C. 16:54.

16:62-4.2 Methodology used to define vertical development allowed within an Airport Hazard Area

(a) Minimum obstruction ordinance standards establish the vertical limits up to which structures or trees may be allowed to be developed or grow within an Airport Hazard Area.

(b) Minimum obstruction ordinance standards are vertical standards measured in respect to elevations whose datum is the horizontal plane established by runway elevations. For example, if a point in an Airport Hazard Area permits at a specific point development up to "X" feet, that means "X" feet above the runway horizontal plane and not "X" feet above the natural grade of the land at that point in the Airport Hazard Area. This provision is further graphically depicted in Figure 4.

(c) The vertical standards within the RUNWAY SUBZONE of an Airport Hazard Area are determined first by establishing the elevations at the runway centerlines at the ends of the RUNWAY SUBZONE of the Airport Hazard Area. From those elevations at the RUNWAY SUBZONE ends, a line is run 90 degrees outward from each side of the runway centerline for a distance of 125 feet. Within the area defined by these four points, no development is allowed above the natural grade of the soil except for runway and flight safety equipment.

1. The vertical standards within the remainder of the RUNWAY SUBZONE of an Airport Hazard Area are determined by establishing planes from the edges of the longitudinal 0 foot development restriction line established in N.J.A.C. 16:62-3.2(b)1.ii. which slope upward and outward at a rate of seven feet horizontally to one foot vertically. This upward plane ceases when it reaches the outer longitudinal borders of the RUNWAY SUBZONE of any Airport Hazard Area at the elevation of 150 feet above its starting point at the longitudinal zero foot development line.

2. The methodology used to establish the vertical standards within the RUNWAY SUBZONE of an Airport Hazard Area is further graphically depicted in Figure 5.

(d) The vertical standards within the RUNWAY END SUBZONE of an Airport Hazard Area are determined by first establishing a plane with a rising slope of one foot upward to 20 feet outward from the end of the RUNWAY SUBZONE to the outermost end of the RUNWAY END SUBZONE. This plane is bisected by the extended runway centerline and is 250 feet in total width at its innermost dimension and widens uniformly along its 3000 foot length so as to have a total width of 850 feet at its outermost dimension where it intersects with the outermost portion of the RUNWAY END SUBZONE at the elevation of 150 feet above its starting point at the zero foot development line.

1. The vertical standards within the remainder of the RUNWAY END SUBZONE of an Airport Hazard Area are determined by establishing sloping planes from the outermost longitudinal edges of the plane established in (d) above. These planes rise upward at a rate of one foot upward to seven feet outward from the plane established in (d) above to where they meet the outermost longitudinal boundaries of the RUNWAY END SUBZONE at the elevation of 150 feet.

ii. The methodology used to establish the vertical standards with the RUNWAY END SUBZONE of an Airport Hazard Area is further graphically depicted in Figure 6.

SUBCHAPTER 5. LAND USE

16:62-5.1 Minimum land use standards

(a) Within the hazard areas delineated in N.J.A.C. 16:62-3.1, each municipality shall implement under N.J.A.C. 16:62-2.1, ordinances which implement the following standards for land use around airports. Prohibited land uses are specifically prohibited without the written approval of the Commissioner. Prohibited land uses may be allowed by the Commissioner on airport property when they are determined necessary by the Director for air commerce purposes or for the operation of the airport and its vendors directly serving air commerce needs.

1. Permitted land uses (except in conjunction with a prohibited land use)

i. Industrial;

ii. Commercial;

iii. Open space;

iv. Agricultural;

v. Transportation;

vi. Airport.

2. Specifically prohibited land uses

i. Residential (dwelling units);

ii. Planned unit developments and multifamily dwellings;

iii. Hospitals;

iv. Schools;

v. Bulk flammable or bulk compressed gas storage;

vi. Single uses that would attract crowds in excess of 500 persons;

vii. Incineration facilities;

viii. Uses that may attract massing birds, including land fills.

ix. Above grade major utility transmission lines and/or mains.

(b) Subject to review by the Director, a municipality may implement land uses substantially similar to those listed as permitted land uses in (a)1i–vi above as long as they are in accord with the intents of this chapter as determined by the Commissioner. A municipality may not, however, implement a land use ordinance or plan which may have the effect of allowing or promoting the establishment of specifically prohibited land uses as determined by the Commissioner. A municipality further may not implement ordinances which would have the effect of preventing routine improvement of an aeronautical facility or airport within the area zoned under this chapter.

You're viewing an archived copy from the New Jersey State Library.

SUBCHAPTER 6. PERMIT FOR CREATION OR EXPANSION OF A PROHIBITED LAND USE OR VERTICAL HEIGHT DEVELOPMENT WITHIN AN AIRPORT HAZARD AREA

16:62-6.1 General provisions

(a) The Commissioner may issue a permit for creation or establishment of a nonconforming use or vertical height development within an airport hazard area upon determination that:

1. An application in conformance with the provisions of this section has been properly submitted;

2. A conditional development approval has been granted by the appropriate municipal agency, if required;

3. The creation of the prohibited land use or vertical height development will not in fact create an additional airport hazard limiting the size of the area available for landing, taking-off and maneuvering of aircraft; and

4. Creation or establishment of the prohibited land use or vertical height development will not harm the public health, safety and welfare.

(b) No person may commence the construction or development of any structure, land use, or condition which is contrary to the standards of this chapter without a valid permit issued by the Commissioner.

(c) In considering an application for a permit, the Director may confer with and seek additional information from the applicant or any other interested party, agency, or governmental organization.

(d) In the review of an application, the Department may take into consideration any factor relevant to the hardship demonstrated by the applicant and any information relevant to the public health, safety and welfare.

16:62-6.2 Municipal approval

(a) A developer of a project requiring creation or establishment of a prohibited land use or vertical height development shall first apply for development approval from the appropriate municipal agency. If the municipal agency approves of the development, that approval shall be conditioned on the developer applying for and receiving a permit from the Commissioner in accordance with this section. Construction, development or creation of any prohibited land use shall not commence until a permit has been issued by the Commissioner.

(b) An application for a permit will only be considered by the Department if accompanied by a letter from the municipality requesting the permit.

(c) Any person proposing to create or establish a prohibited land use or vertical height development in a designated airport hazard area not subject to municipal ordinances established in accordance with the Municipal Land Use Law (N.J.S.A. 40:55D), shall present the proposed development to the municipal governing body, which shall be considered the municipal agency for purposes of these rules.

16:62-6.3 Permit application requirements

(a) To be considered complete, an application for a permit for creation of a prohibited land use or vertical height development within an airport hazard area must include the following:

1. Copies of a completed airport hazard permit application form;

2. A letter requesting issuance of a permit by the Department from the municipal agency having jurisdiction over the development, together with a copy of the conditional approval for development granted by the municipal agency, if required;

3. A detailed statement of the hardship condition necessitating the application for variance or relief, and a showing that the public health, safety and welfare will not be harmed by the creation of the prohibited land use or vertical height development;

4. Certification that the applicable airport owner(s) or authority were notified of the permit application by registered mail;

5. Submission of a non-refundable $75.00 permit application fee;

6. Submission of site plans, specifications and construction drawings detailing the substance of the proposed development for which a permit is sought. Site plans shall bear the raised seal of a New Jersey licensed Professional Engineer, Professional Planner, Land Surveyor, or Architect and shall show the location of property lines, the location of runways, the boundaries of the airport hazard area, and elevations of proposed development showing where and by what amount the development exceeds the minimum standards for vertical development adopted under this chapter; and

7. Any other material deemed necessary to the permit application by the Director.

(b) Applications for permits issued under the provisions of this chapter and correspondence to the Department relating to the provisions of this chapter should be forwarded to the following address:

New Jersey Department of Transportation
Division of Aeronautics
Air Safety and Hazardous Zoning Permits
1035 Parkway Avenue
CN 600
Trenton, New Jersey 08625

16:62-6.4 Permit review procedures

(a) For routine applications, review of an application shall be completed by the Division within 90 days of the date on which an application is accepted as complete.

(b) Non-routine cases, requiring the review or approval of a Federal agency or another State agency prior to issuance of a permit, shall be conducted in as timely a fashion as possible. The Director shall notify the applicant of a delay in the review process necessitated by another agency's involvement. The notification shall be provided prior to 80 days following the date of acceptance of a complete application, and shall include an estimate of the date by which a completion of the review process can be anticipated.

(c) For routine cases not requiring review by other agencies, the Division may, at its discretion, extend the 90-day review period by 30 days if determined necessary to complete the review process. The applicant and affected municipality shall be notified of this extension by the Department at least 15 days prior to the expiration of the 90-day period.

(d) Following review of an application by the Division, the Director shall determine whether to recommend to the Commissioner that the permit be granted or denied.

(e) If the Director recommends denial, the applicant and municipal agency will be notified within five working days of the date of decision. An applicant who has been so notified by the Director may request an appeal before the Office of Administrative Law pursuant to N.J.S.A. 52:14B-1 et seq and N.J.A.C. 1:1. The applicant shall notify the Division by certified mail within 14 calendar days of notification of denial that

You're viewing an archived copy from the New Jersey State Library.

an appeal will be forwarded to the Office of Administrative Law.

(f) Pursuant to N.J.S.A. 52:14B-1 et seq and N.J.A.C. 1:1, a final determination to either deny or grant the permit application will be made by the Commissioner subsequent to the filing of an Initial Decision by the Administrative Law Judge who conducted the hearing.

16:62-6.5 Permit application decisions

(a) The Commissioner may take one of the following actions:

1. Approve the application as submitted. The applicant will receive a permit which shall be effective during the same period as the development approval granted by the municipal agency. The Department will mail a copy of the permit to the applicant and municipal agency within five working days of the date of approval.

2. Deny the application. The Department will mail a copy of the permit denial to the applicant and municipal agency within five working days of the date of decision.

3. Phased or partial approval. Where conditions warrant, the Commissioner may provide for a phased approval of an application. The Commissioner may also approve part of an application and deny the remainder. The nature of approvals granted, and of the denials, shall be transmitted to the applicant and municipal agency within five working days.

SUBCHAPTER 7. PROVISIONS FOR AMENDED AND SPECIAL AIRPORT STANDARDS

16:62-7.1 General provisions

(a) Under Section 5 of the Airport Safety Act of 1983 the Commissioner may, notwithstanding any other provision of this chapter, adopt an amended or special standard for an airport when he determines that local conditions require it. Those standards shall be adopted under the Administrative Procedure Act, N.J.S.A. 52:14B-1 et seq.

16:62-7.2 Amended and special standards (Reserved)

SUBCHAPTER 8. LIABILITY

(a) Violation of any provision of this chapter may be grounds for fine, modification, suspension or revocation of any license issued under Title 6 of the New Jersey Statutes Annotated.

(b) The Commissioner may institute, in any court of competent jurisdiction, an action in the name of the State to prevent, restrain, correct, or abate any violation of any provision of this chapter and by way of injunction or otherwise, relief from the court.

FIGURE 1.

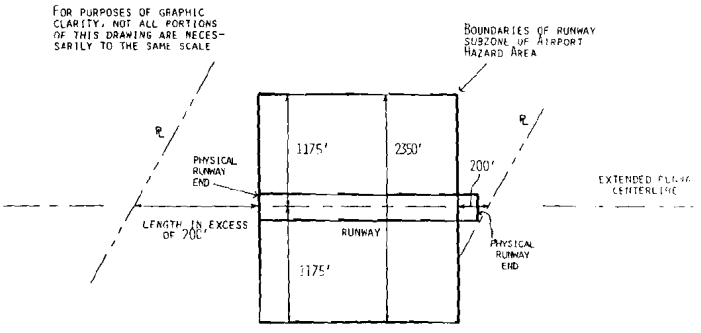

GRAPHIC DEPICTION OF THE GENERAL CONSTRUCTION OF THE RUNWAY SUBZONE OF AN AIRPORT HAZARD AREA

FIGURE 2.

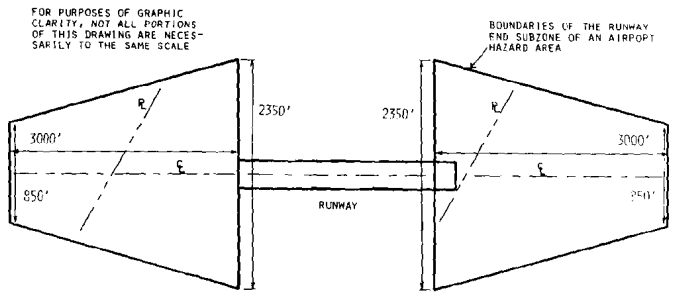

GRAPHIC DEPICTION OF THE GENERAL CONSTRUCTION OF THE RUNWAY END SUBZONE(S) OF AN AIRPORT HAZARD AREA

FIGURE 3.

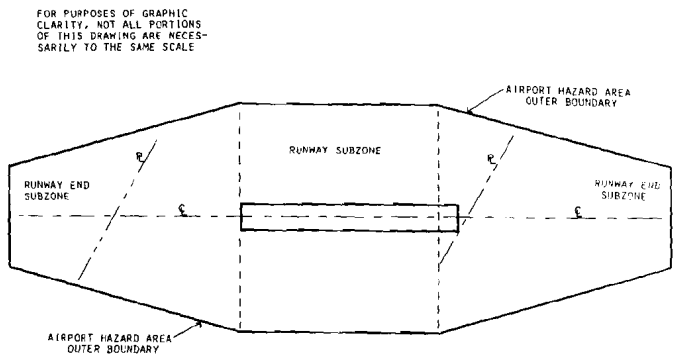

GRAPHIC DEPICTION OF THE GENERAL OVERALL CONSTRUCTION AND OUTERMOST BOUNDARIES OF AN AIRPORT HAZARD AREA

FIGURE 4.

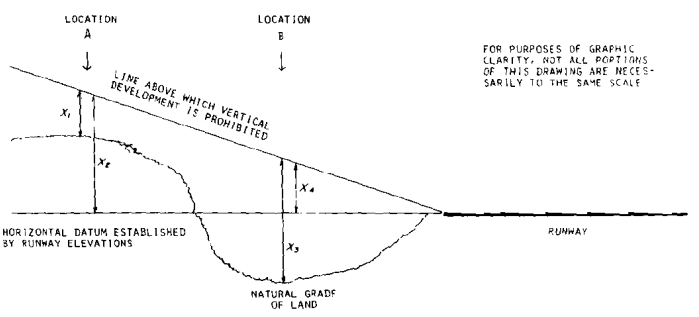

THE MINIMUM OBSTRUCTION ORDINANCE STANDARDS RELATE DIRECTLY TO THE HORIZONTAL DATUM ESTABLISHED BY RUNWAY ELEVATIONS AND NOT THE HEIGHT ABOVE THE NATURAL GRADE OF THE LAND. FOR EXAMPLE, AT LOCATION A AN ORDINANCE MAY REFERENCE A HEIGHT RESTRICTION X_2 FEET, BUT AT THAT LOCATION THE DEVELOPABLE HEIGHT RESTRICTION ABOVE THE NATURAL GRADE OF THE LAND IS ACTUALLY X_1 FEET. AT LOCATION B THE ORDINANCE HEIGHT RESTRICTION MAY BE X_4 FEET BUT THE DEVELOPABLE HEIGHT RESTRICTION MAY BE X_3 FEET.

You're viewing an archived copy from the New Jersey State Library.

FIGURE 5.

VERTICAL AND HORIZONTAL PLANES OF RUNWAY SUBZONE OF AIRPORT HAZARD AREA

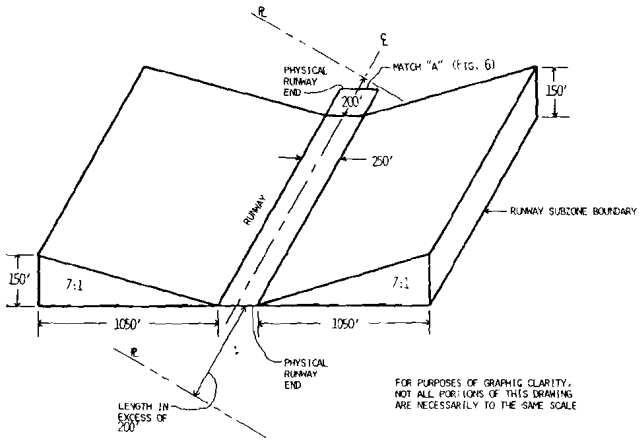

FIGURE 6.

VERTICAL AND HORIZONTAL PLANES OF RUNWAY END SUBZONE OF AIRPORT HAZARD AREA

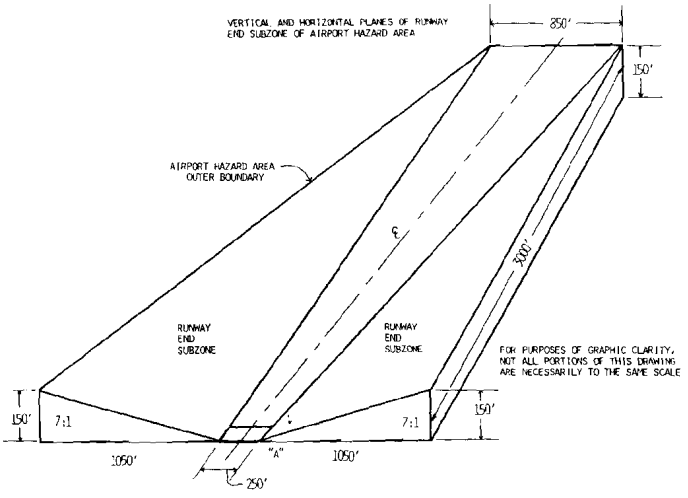

TREASURY-GENERAL

(a)

DIVISION OF PURCHASE AND PROPERTY

Purchase Bureau Procedures

Proposed Readoption: N.J.A.C. 17:12

Authorized By: Michael M. Horn, State Treasurer.
Authority: N.J.S.A. 52:18A-30(d).

Interested persons may submit in writing, data, views or arguments relevant to the proposal on or before May 16, 1984. These submissions, and any inquiries about submissions and responses, should be addressed to:

Burton Weltman
Assistant to the Director
Division of Purchase and Property
135 West Hanover Street
Trenton, New Jersey 08625

The Department of Treasury thereafter may adopt this proposal without further notice (see: N.J.A.C. 1:30-3.5). Pursuant to Executive Order No. 66(1978), these rules expired on March 12, 1984. The adoption becomes effective upon publication in the Register of a notice of adoption.

This proposal is known as PRN 1984-211.

The agency proposal follows:

Summary

These rules of procedure implement the various bidding and award requirements imposed on State purchasing contracts by N.J.S.A. 52:34-6, et seq. The basic statutory requirements have remained basically unchanged since 1954, and therefore the basic procedural scheme has remained basically unchanged. No changes are being proposed at this time. However, in light of the proposed reorganization of the Divisions of Purchase and Property and of Building and Construction, changes may be proposed in the near future.

Subchapter 1 describes the organization of the Purchase Bureau, which has primary responsibility for State purchasing. Some 150 people are employed in the Bureau, including the State Distribution Center.

Subchapter 2 describes the bidding procedures. The Bureau issued some 1,933 different Requests for Proposals in Fiscal Year 1983 and sent some 207,133 copies to vendors.

Subchapter 3 describes the hearing procedures wherein disappointed bidders may protest the propriety of a proposed contract award. The hearings are conducted through the Office of the Director of the Division of Purchase and Property. Some 50 hearings per year are held.

Subchapter 4 describes the agency complaints procedure, whereby State agencies may seek remedies for contract violations and contract performance problems. Some 300 complaints per year are received by the Purchase Bureau. Some 15 to 20 contracts per year are cancelled by the Director as a result of agency complaints.

Subchapters 5 and 6 are reserved.

Subchapter 7 describes the procedure for suspension, disbarment and disqualification of vendors for various causes. Suspensions are processed by the Office of the Attorney General, and debarments are heard as contested cases at the Office of Administrative Law. Debarments are authorized by Executive Order No. 34(1976). Between one and five vendors are suspended or debarred each year.

Social Impact

These rules attempt to implement the two basic statutory purposes of N.J.S.A. 52:34-6 et seq.: (1) to get the best possible product at the best possible price for the State as expeditiously and efficiently as possible; and, (2) to treat all vendors equally and fairly, and guard against favoritism, improvidence, extravagance and corruption. See Lincoln Realty, Inc. v. State 128 NJ Super 35(1974) and Commercial Cleaning Corp. v. Sullivan 47 NJ 539(1966). These two statutory purposes are not always clearly consistent, and the Division, through its procedures, attempts to reconcile these purposes in the best interests of the State. For example, the hearing procedure permits disappointed bidders for State contracts to protest a proposal award, and have the Director reconsider whether a proposed award is in the best interests of the State. Likewise, the complaints procedure helps State agencies to remedy instances of non-compliance by contractors.

Economic Impact

In Fiscal Year 1983, the Division awarded purchase contracts totalling some $469 million, up from $242 million in

You're viewing an archived copy from the New Jersey State Library.

Fiscal Year 1979. State purchases have therefore increased almost 75 percent over the last five years so that the proper functioning of the Purchase Bureau has a significant effect on the State government budget, and on the economy of the whole State. Most of these contracts are awarded through competitive bidding. A recent federal government report estimated that up to 20 percent of the purchase price is saved by awarding a contract through competitive bidding. These rules help to implement that cost saving process and attempt to reconcile the State government's purchasing process with the State government's needs and the operations of the general economy.

Full text of the readoption may be found in the New Jersey Administrative Code N.J.A.C. 17:12-1 through 17:12-7.

(a)

OFFICE OF THE STATE TREASURER

Collection of Debts
Debts Owed to New Jersey Higher Education Assistance Authority by State Employees

Proposed New Rule: N.J.A.C. 17:25

Authorized By: Michael M. Horn, State Treasurer.
Authority: N.J.S.A. 18A:72-23, -24 and -25 and 52:18A-30.

Interested persons may submit in writing, data, views or arguments relevant to the proposal on or before May 16, 1984. These submissions, and any inquiries about submissions and responses, should be addressed to:

Elizabeth Felker
Director of Financial Management
19 Chancery Lane
Trenton, N.J. 08625

At the close of the comment period, the State Treasurer may adopt this proposal, with any minor changes not in violation of the rulemaking procedures at N.J.A.C. 1:30-3.5. The adoption of these rules becomes effective upon publication in the Register of a notice of their adoption.

This proposal is known as PRN 1984-198.

The agency proposal follows:

Summary

The proposed new rules are being promulgated pursuant to N.J.S.A. 18A:72-23 et. seq. to provide for a system whereby the New Jersey Higher Education Assistance Authority (NJHEAA), in conjunction with the Department of the Treasury, shall cooperate in identifying State of New Jersey employees who are delinquent in payments to the N.J.H.E.A.A on any note or obligation held by the New Jersey Higher Education Assistance Authority pursuant to N.J.S.A. 18A-72-16. The proposed new rules establish procedures for deducting from the wages of such State employees the sum of any such debt owed to the New Jersey Higher Education Assistance Authority. There are presently approximately two hundred State employees with delinquent balances that total in excess of $600.00.

Social Impact

The proposed new rules will provide for the deduction of ten percent of the gross wages by the Department of the Treasury of those State of New Jersey employees who are overdue in payments to the New Jersey Higher Education Assistance Authority. These deductions will be forwarded to the N.J.H.E.A.A. for credit to the loan accounts of the affected State employees.

Economic Impact

Any State of New Jersey employee who is delinquent in his or her payments to the New Jersey Higher Education Assistance Authority on educational loans will have his or her State payroll checks decreased, possibly by the amount of the debt due. This will assist the New Jersey Higher Education Assistance Authority in the collection process of debts owed to it.

Full text of the new rule follows.

CHAPTER 25
COLLECTION OF DEBTS

SUBCHAPTER 1. DEBTS OWED TO N.J.H.E.A.A. BY STATE EMPLOYEES

17:25-1.1 Purpose

The purpose of this subchapter is to establish a policy and to provide a system whereby the New Jersey Higher Education Assistance Authority (N.J.H.E.A.A.) in conjunction with the Department of Treasury shall cooperate in identifying State of New Jersey employees who are delinquent in payments to the N.J.H.E.A.A. on any note held pursuant to N.J.S.A. 18A:72-16. It is also the intent of this subchapter to establish procedures for deducting from the wages of such State employees the sum of any such debt owed to the New Jersey Higher Education Assistance Authority. The procedures contained in this subchapter afford the State employee the opportunity to assert any legal rights he may have prior to the deduction from the wages.

17:25-1.2 Definitions

The following words and terms, when used in this subchapter shall have the following meanings:

"Authority" means the New Jersey Higher Education Assistance Authority created pursuant to N.J.S.A. 18A:72-1 et seq.

"Administrative resolution" means resolving any contested debt due and owing the New Jersey Higher Education Assistance Authority by the administrators of the New Jersey Higher Education Assistance Authority.

"Debt" means any liquidated sum due and owing the Authority which has accrued through any note held by the Authority pursuant to N.J.S.A. 18A:72-16 which sums are more than 60 days overdue, regardless of whether there is an outstanding judgment for that sum.

"Debtor" means any New Jersey State employee or officer on the Centralized Regular Bi-weekly Payroll owing money to or having a note or obligation to the Authority in which payments are more than 60 days delinquent, which obligation has not been adjudicated satisfied by court order, set aside by court order, or discharged in bankruptcy.

"Department" means the New Jersey Department of Treasury.

"Net proceeds collected" means gross proceeds collected through total deductions from a debtor's State payroll checks minus any collection fee charged by the Department to provide for any expenses of the collection effort.

You're viewing an archived copy from the New Jersey State Library.

"Payroll check" means the wages received by New Jersey State employees and officers paid by the Centralized Regular Bi-weekly Payroll in return for services provided to the employee's or officer's respective State agency, department, office or other entity using the State Centralized Payroll System by which the employee or officer is employed.

17:25-1.3 Procedure for deduction from wages

The Authority shall notify the Department in writing and supply the Department with a list of persons currently in default on notes held by the Authority. The Department shall notify the Authority of those persons currently in default on notes held by the Authority who are currently receiving wages as New Jersey State employees or officers. Upon notification by the Department, and after the liquidated sum due is finally established by Authority records, the Authority shall forward a list to the Department as to those debtors for which the Authority requests deductions to be made.

17:25-1.4 Amount of deduction from wages

(a) The amount deducted from any debtor's payroll check shall be the lesser of the following amounts in each pay period:

1. The amount of money currently due and owing to the Authority; or
2. Ten percent of the debtor's gross pay for the particular pay period from which the deduction is made; or
3. Such other amount agreed to by the Authority and the employee or officer.

17:25-1.5 Notice to debtor

Within 10 days after the notification to the Authority that the employee or officer is receiving wages from the State Payroll System, the Authority shall notify the alleged debtor by regular mail of the proposed deduction and inform the alleged debtor of the right to make a request to the Authority within 30 days after the date of notice, for a hearing on the alleged debt and the proposed deduction.

17:25-1.6 Authority proceedings

No later than 45 days from the date of the Authority's notice to the alleged debtor of the proposed deduction, the Authority shall notify the Department to begin deductions for the repayment of the debt from the payroll check where the debtor has not responded to the notice provided pursuant to N.J.A.C. 17:25-1.5 within 30 days of the notice date.

17:25-1.7 Authority procedure; administrative resolution; hearing

(a) When an alleged debtor makes a timely request for a hearing, the Authority shall schedule an administrative resolution and meet with the debtor in an effort to agree upon the sum asserted as due and owing and any other relevant matters.

(b) Pending the administrative resolution or final determination of the validity of the debt asserted by the Authority, no action shall be taken in furtherance of collection of that alleged debt through the deduction procedure established by this subchapter.

17:25-1.8 Referral to the Office of Administrative Law; hearing

If administrative resolution efforts in a contested case are unsuccessful, the matter shall be filed forthwith with the clerk of the Office of Administrative Law pursuant to the requirements of the "Administrative Procedures Act" N.J.S.A. 52:14B-1 et seq. as amended and supplemented and the "New Jersey Uniform Administrative Procedures Rules" N.J.A.C. 1:1.

17:25-1.9 Finalization of deduction by Authority

(a) Upon either final agreement arrived at an administrative resolution or final determination of the debt due and owing the Authority or exhaustion of time in which an appeal may be filed, the Authority shall forthwith certify the finalized debt to the Department.

(b) Upon receipt by the Department of a certified finalized debt from the Authority, the Department shall make the deduction and transfer the net proceeds collected for payment to the Authority.

(c) At regular intervals the Authority shall notify the Department of any adjustments to be made in the amount of the finalized debt, due to accrued interest or payments received by the Authority outside of these procedures.

17:25-1.10 Notice to debtor of final deduction

Upon the final determination of the debt due and owing, the Authority shall notify the debtor in writing of the action taken along with its intent to begin deductions.

17:25-1.11 Disposition of proceeds collected; collection assistance fees

(a) Upon effecting deductions, the Department shall transfer to the Authority, the net proceeds collected on its behalf.

(b) From the gross proceeds collected by the Department through deductions, the Department shall retain one percent, which amount shall be charged to the Authority as a collection assistance fee.

17:25-1.12 Accounting to the Authority; credit to debtor's obligation

(a) Simultaneously with the transmittal of the net proceeds collected to the Authority, the Department shall provide the Authority with an accounting of the deductions finalized for which payment is being made.

(b) The accounting shall, whenever possible, include:

1. The full names of the debtors;
2. The gross proceeds collected per individual deductions;
3. The net proceeds collected per deduction; and
4. The collection assistance fee charged per deduction.

(c) Upon receipt by the Authority of the net proceeds collected on the Authority's behalf by the Department and an account of the proceeds as specified under this section, the Authority shall credit the debtor's obligation with the net proceeds collected.

(d) Under special circumstances and subject to the approval of the Director of the Division of Budget and Accounting, the Department may employ such alternative method of payment and billing as may be agreed upon with the Authority.

You're viewing an archived copy from the New Jersey State Library.

RULE ADOPTIONS

BANKING

(a)

DIVISION OF BANKING

Minimum Stock Subscription for Capital Stock Associations

Adopted Amendment: N.J.A.C. 3:1-2.21

Proposed: February 6, 1984 at 16 N.J.R. 174(a).
Adopted: March 20, 1984 by Michael M. Horn, Commissioner of Banking.
Filed: March 21, 1984 as R.1984 d.119, **without change**.

Authority: N.J.S.A. 17:1-8.1 and 17:12B-272.

Effective Date: April 16, 1984.
Expiration Date pursuant to Executive Order No. 66(1978): June 6, 1986.

Summary of Public Comments and Agency Response: **No comments received.**

Full text of the adoption follows.

3:1-2.21 Minimum stock subscription for capital stock associations

(a) Each charter application for a capital stock association shall provide for stated capital of $2,000,000.00, or such other amount as required by the Commissioner.

(b) The incorporators of a capital stock association shall subscribe to such number of shares as may be required by the Commissioner.

(c) The balance of the capital stock, if any, shall be offered to the general public in the area to be served by the capital stock association if and when the application is approved and under such terms and conditions as set forth in the Commissioner's Decision and Order.

COMMUNITY AFFAIRS

(b)

DIVISION OF HOUSING AND DEVELOPMENT

Relocation Assistance and Eviction

Readoption: N.J.A.C. 5:11

Adopted Amendments: N.J.A.C. 5:11-1.2, 2.1, 2.3, 2.5, 3.1, 3.2, 3.3, 3.6, 3.7, 3.9, 3.11, 6.1, 7.1, 7.2, 7.4, 8.2
Adopted New Rule: N.J.A.C. 5:11-3.13

Proposed: February 6, 1984 at 16 N.J.R. 175(a).
Adopted: March 23, 1984 by John P. Renna, Commissioner, Department of Community Affairs.
Filed: March 28, 1984 as R.1984, d.127, **with technical and substantive changes** not requiring additional public notice and comment (see N.J.A.C. 1:30-3.5).

Authority: N.J.S.A. 2A:18-61.12, 52:31B-10 and 20:4-10.

Effective Date of Readoption: March 28, 1984.
Effective Date of Adopted Amendments and New Rule: April 16, 1984.
Expiration Date pursuant to Executive Order No. 66(1978): March 1, 1989.

Summary of Public Comments and Agency Responses:

Comments were received from representatives of the Monmouth County Board of Social Services and Ocean-Monmouth Legal Services, Inc. Both comments expressed concern that the exemption from relocation responsibility in the case of a vacate order issued under authority of the State Uniform Construction Code Act in response to an imminent hazard to life safety would only encourage municipalities to issue orders alleging the existence of life safety hazards as a subterfuge to avoid issuing orders under other codes and thereby incurring relocation liability. While the Department still believes it should not be necessary to pay people for the right to save their lives, it does agree that municipalities should not be able to use imminent hazard vacate orders when no imminent hazard to life safety, in fact, exists so as to avoid relocation responsibility. Language has therefore been added providing that, in any administrative proceeding to determine entitlement to relocation benefits for a claimant who have vacated a property in compliance with an order issued under the State Uniform Construction Code Act citing an imminent life safety hazard, the displacing agency shall have the burden of proving that an imminent life safety hazard existed.

Ocean-Monmouth Legal Services, Inc. also raised the following points:

1. The requirement that the notice to vacate be "written" and "lawful" might result in unjust denial of benefits because oral notice is, in fact, often given and the tenant would lose his rights by complying with it and because a notice might be deemed to be unlawful by reason of some technical defect. The Department believes these objections to be well taken and has revised the text to remove the word "written"—thereby allowing the displaced person to prove the existence of an oral order—and to change the word "lawful" to "governmental."

2. Fixing the rental assistance benefit at the initial amount would be unfair to tenants, particularly in non-rent controlled municipalities, who might be subject to substantial rent increases during the four year period. The Department does not believe that annual rental adjustments would necessarily favor the relocated tenant, since any increase in his income would reduce his rental assistance benefit. The added administrative burden on relocation agencies would not be justified.

3. The proposed requirement that rental be "current" as a precondition to rental assistance eligibility raises questions as to what happens in the event of landlord-tenant disputes over the amount due or what verification will be required. It is also

You're viewing an archived copy from the New Jersey State Library.

questionable whether there is any reasonable basis for conditioning rental assistance eligibility upon the non-occurance of problems affecting ability to pay rent which may have nothing to do with the displacement. The Department does not agree that public funds should be used for rental assistance when the rent is, in fact, not being paid and the money may be used for some other purpose. However, the text is being amended to allow the relocation agency to make payments even if the rent is not current if there is a reasonable basis for any non-payment.

The sections of subchapter 3 have been reorganized so as to make them more comprehensible to users of the regulations.

Full text of the adoption follows (additions to the proposal shown in boldface with asterisks ***thus***; deletions from the proposal shown in brackets with asterisks *[thus]*).

5:11-1.2 Definitions

. . .

"Commissioner" means the Commissioner of the Department of Community Affairs.

. . .

"Displaced" means required to vacate any real property lawfully occupied pursuant to any *[lawful **written**]* order or notice of any displacing agency on account of a program of acquisition, code enforcement proceedings or voluntary rehabilitation of buildings.

. . .

"WRAP" means the Workable Relocation Assistance Plan required to be submitted to the Department for approval prior to the undertaking of any relocation activities.

5:11-2.1 Building, housing and health code enforcement

(a) Whenever a State Agency or unit of local government undertakes a program of building code enforcement, housing code enforcement or health code enforcement that causes the displacement of people, businesses or farm operations, the said State Agency or unit of local government shall provide relocation payments and assistance to all lawful occupants who are displaced, as provided in subchapters 3 and 4 of this chapter. The date of eligibility shall be the date occupants received formal written notice to vacate from the State Agency or unit of local government.

(b) Whenever the displacement occurs because of an order to vacate issued by a State Agency or unit of local government as a direct result of a natural disaster, an imminent hazard to life safety necessitating the issuance of a vacate order pursuant to the state Uniform Construction Code Act (N.J.S.A. 52:27D-119 et seq.) or fire, there shall, except as may otherwise be expressly provided by statute, be no relocation benefits due the displaces; provided, however, that a municipality may provide such benefits to fire victims but shall receive no reimbursement through any state grant-in-aid, except as may otherwise be expressly provided by statute, for the cost of doing so.

(c) (No change.)

5:1-2.3 Evictions under N.J.S.A. 2A:18-61.6(g)

(a)-(b) (No change.)

(c) In cases where a landlord is to be cited for a violation pursuant to an illegal occupancy which could potentially result in a g(3) eviction, the following shall be included as an insert sent with the violation notice:

IF, IN SEEKING TO CORRECT THE ILLEGAL OCCUPANCY FOR WHICH YOU HAVE BEEN CITED, IT IS NECESSARY FOR YOU TO EVICT ONE OR MORE TENANTS TO COMPLY, YOU MUST NOTIFY THOSE TENANTS OF THEIR POTENTIAL ELIGIBILITY FOR RELOCATION ASSISTANCE. FURTHER INFORMATION REGARDING YOUR RESPONSIBILITIES AS OWNER PURSUANT TO REGULATIONS CONCERNING EVICTION AND RELOCATION MAY BE OBTAINED BY CONTACTING THE FOLLOWING:
DEPARTMENT OF COMMUNITY AFFAIRS
DIVISION OF HOUSING AND DEVELOPMENT
OFFICE OF LANDLORD-TENANT RELATIONS
CN 804
TRENTON, NEW JERSEY 08625
TELEPHONE: (609) 292-6417

5:11-2.5 Programs of rehabilitation

(a)-(b) (No change.)

(c) In any case in which a Federal agency is providing funding for a rehabilitation program, relocation payments and assistance shall be made in compliance with applicable Federal requirements, any provisions of subchapters 3 and 4 of this chapter imposing different requirements notwithstanding.

(d) The WRAP submitted by the public agency shall be on standard forms required by the Department as well as in such format as may be required by the funding agency.

5:11-3.1 Relocation payments generally

(a) Whenever a displacing agency causes the displacement of persons, businesses or farm operations and those persons, businesses or farm operations are eligible for relocation payments, the nature, extent and terms of those payments shall be as described in this subchapter.

(b) Claims for relocation assistance must be filed within 12 months of receipt by the claimant of the notice to vacate.

5:11-3.2 Rental assistance payments

(a) A family or an individual lawful occupying a rental dwelling unit for a period of not less than 90 days prior to the eligibility date as specified and vacating the rental dwelling unit after ***[lawful written]*** ***governmental*** notice to vacate and rents and occupies comparable decent, safe and sanitary replacement housing shall be eligible for a rental assistance payment in an amount not to exceed $4,000.

(b) The actual amount of the rental assistance payment shall be the difference between the average monthly rent, including essential utilities, for the rental dwelling unit and the actual monthly rental payment paid for a replacement unit, times 48, not exceeding $4,000.

1. Once calculated, the amount of this benefit shall remain constant and shall neither increase nor decrease over the four-year period.

(c) If the rental assistance payment exceeds $750.00, the displacing agency shall make the payment in four equal annual installments, upon verification that the tenant remains in comparable standard housing and that rent payments are current ***, unless the relocation agency finds there to be reasonable cause for any non-payment of rent***.

1. Should the tenant move outside the State and further than 50 miles away from the unit from which he was displaced

You're viewing an archived copy from the New Jersey State Library.

or fail to occupy comparable standard housing during the four-year period, the displacing agency may discontinue further rental assistance payments. The 50 mile radius provided herein may be enlarged by the displacing agency, in its discretion.

2. If the rental assistance payments are not consecutive because the tenant moved into substandard housing or moved outside the authorized area, the tenant, if he is no longer living in substandard housing or outside the authorized area, may reactivate his claim within one year of the last prior date on which he would have been eligible to receive the rental assistance payment.

(d) Rental rates for comparable replacement housing shall be *[estimated by any of the following two methods at the option of the displacing agency:

1. A]* ***as set forth in a*** rent schedule based on FHA fair market rents for the ***area*** *[areas from which displacement or]* to which relocation occurs *[, whichever is lower; or

2. An alternative method approved by the Department]*.

(e)-(f) (No change.)

5:11-3.3 Down payment assistance

(a) A displaced tenant who is eligible to receive a rental assistance payment or a displaced owner-occupant of fewer than 180 days may elect to purchase a comparable replacement dwelling and, if he does so purchase, he shall receive an amount not to exceed $4000.00 or the amount necessary in order to make a downpayment on the purchase of a comparable standard dwelling adequate to accommodate such person and his family, whichever is less, subject to the following:

1.-2. (No change.)

3. In the event the total of the minimum downpayment needed and incidental closing costs exceeds $2,000.00, the displacee must match dollar for dollar the amount in excess of $2,000.00, to a maximum payment of $4,000.00.

4. If the displacee chooses to purchase a building containing more than one dwelling unit or commercial space, downpayment assistance shall be limited to that portion of the minimum downpayment required that is attributable on a pro rata basis to the dwelling unit to be occupied by the owner.

5:11-3.6 Payments to businesses

(a) An eligible business that is displaced from its place of operation and moves its personal property therefrom shall be entitled to receive payment for:

1. Actual reasonable moving expenses, as set forth in N.J.A.C. 5:11-3.7; actual reasonable direct loss of tangible personal property, as set forth in N.J.A.C. 5:11-3.8; actual reasonable expenses incurred in searching for a replacement business, as set forth in N.J.A.C. 5:11-3.9; and actual reasonable expenses for professional fees incurred in the renovation and lease, use or acquisition of the replacement site, as set forth in N.J.A.C. 5:11-3.13; or

2. (No change.)

5:11-3.7 Moving expenses; businesses

(a) A relocation payment for moving expenses of a business shall be limited to the following items, as applicable:

1. (No change.)

2. The actual reasonable and necessary cost incurred for inspection and license fees required by statute or local ordinance to permit the operation of the business at the new location.

3. The actual reasonable and necessary cost of reconnecting utility service to machinery and equipment, including, without limitation, the cost incurred in adapting or converting relocated machinery and equipment to use a different type of power supply, to the extent that these services were required in the former location.

4. (No change.)

5. The owner of a displaced business may elect to replace with a comparable item any item of personal property, including, without limitation, outdoor advertising displays or signs, utilized in its operation which is not to be moved. In such a case, the amount of the moving expense payment shall be the lesser of:

i. The actual cost of the substitute equipment delivered and installed at the new location less any proceeds from the disposition of the old equipment or, if a bona fide sale cannot be made, less the market value of the old equipment as determined by an independent appraisal; and

ii. The estimated cost of relocating the old equipment, as determined by the displacing agency.

(b) The business move may be accomplished by either of two methods, as described in this subsection:

1. (No change.)

2. The displaced business may choose to move itself upon prior notice to the displacing agency and shall submit the three moving estimates as in (b)1 above. The amount of the moving cost payment shall be the lesser of the bid chosen or the estimate obtained by the displacing agency.

5:11-3.9 Expenses for searching for a replacement location

(a) In addition to moving expenses and loss of personal property payments, a displaced business shall be reimbursed for the actual and reasonable expenses incurred in searching for a replacement location, not to exceed $1,000.00.

(b) These expenses may include transportation costs within 50 miles, time spent in searching, not exceeding $15.00 per hour, and fees paid to a real estate agent for locating a site.

5:11-3.11 Emergency relocation

In the event a displacing agency causes a displacement that required emergency relocation, the displacing agency shall provide a lump sum payment of not more than $500.00 so that the displacee may obtain living quarters until permanently relocated. This payment shall be available immediately upon the displacement and shall be charged against the total amount payable in accordance with the statute.

5:11-3.13 Payment for professional fees

(a) The owner of a displaced business may receive a payment for professional fees for, without limitation, the following services:

1. Architect's plans for the new site, as required by local ordinance, showing modifications needed to make physical changes to an existing building; and

2. Legal services, including, without limitation, the researching of local ordinances and preparing of documents for submission to local construction officials, planning boards and boards of adjustment.

5:11-6.1 Workable Relocation Assistance Plan (WRAP)

(a) In order to insure that the relocation benefits required are administered in a uniform manner the displacing agency shall submit a Workable Relocation Assistance Plan (WRAP) to the Department for approval. No relocation activities may take place until the WRAP is approved.

(b) (No change.)

You're viewing an archived copy from the New Jersey State Library.

(c) The WRAP shall include such measures, facilities or services as are necessary in order to:
1.-2. (No change.)
3. Secure the coordination of relocation activities with other displacing agencies;
4.-9. (No change.)

5:11-7.1 General notice
(a) Whenever a landlord intends to terminate a tenancy because of enforcement of building, housing or health codes, public acquisition of the premises or participation in a government-sponsored program of voluntary rehabilitation, including, without limitation, new construction, the landlord shall give written notice of his intent to the tenant.
1.-2. (No change.)

5:11-7.2 Additional notice for proceedings under N.J.S.A. 2A:18-61.1(g)
(a)-(b) (No change.)
(c) Landlords may obtain copies of this required statement from the Office of Landlord-Tenant Relations, Department of Community Affairs, CN 804, Trenton, N.J. 08625. Spanish speaking tenants shall be provided with this statement in Spanish, and such statement is also available at the same address.

5:11-7.4 Responsibilities of Department of Community Affairs
(a)-(b) (No change.)
(c) The premises shall be inspected, the tenant's comments and the landlord's statement shall be assessed and, where applicable, the Department of Community Affairs shall consult with the local inspection agency. On the basis of this information, a conclusion as to the feasibility of achieving compliance through elimination of the violations without removal of the tenant shall be reached by the Department of Community Affairs within 60 days of its receipt of the original notice from the landlord. Notice of this conclusion shall be given to the Court having jurisdiction, the appropriate relocation agency, the landlord, the affected tenants and the local inspection agency within 90 days of receipt of the landlord's notice.
(d) (No change.)
(e) The notice of the Department's conclusion shall include the name, address and telephone number of the appropriate relocation agency.
(f) The name and addresses of the tenants, any tenant comments, and an explanatory letter shall be enclosed with the notice of the Department's conclusion to the Court.

5:11-8.2 Funding criteria
(a) A municipality meeting the following criteria may receive the total cost of relocation assistance and payments.
1. (No change.)
2. A budget of less than $1.5 million;
3.-4. (No change.)
(b)-(c) (No change.)

Subchapter 3 has been renumbered as follows:

3.1 Relocation payments general (No change.)

[3.5] **3.2** Moving expenses; residential

[3.11] **3.3** Emergency relocation

[3.12] **3.4** Temporary relocation

[3.2] **3.5** Rental assistance payments

[3.3] **3.6** Down payment assistance

[3.4] **3.7** Replacement housing payment for owners

[3.6] **3.8** Payments to businesses

[3.7] **3.9** Moving expenses; businesses

[3.8] **3.10** Loss of tangible personal property

[3.9] **3.11** Expenses of searching for a replacement location

[3.10] **3.12** Payment in lieu of moving and other expenses

3.13 Payment for professional fees (new section).

(a)

DIVISION OF HOUSING AND DEVELOPMENT

Uniform Construction Code Certificate of Continued Occupancy

Adopted Amendments: N.J.A.C. 5:23-1.4 and 2.23

Proposed: February 6, 1984 at 16 N.J.R. 179(a).
Adopted: March 16, 1984 by John P. Renna, Commissioner, Department of Community Affairs.
Filed: March 21, 1984 as R.1984 d.120, **without change**.

Authority: N.J.S.A. 52:27D-124.

Effective Date: April 16, 1984.
Expiration Date pursuant to Executive Order No. 66(1978): April 1, 1988.

Summary of Public Comments and Agency Responses:

A comment was received from a county building officials' association recommending that the Construction official be given authority to designate any licensed inspector to do all inspections, thereby eliminating the requirement that all subcode officials approve the issuance of the certificate. The Department is adopting the amendment as proposed, however, because it believes that only a person who is licensed in a particular subcode area can properly determine that a building conforms to the requirement of that subcode. Electrical inspectors, for example, should not be certifying the safety of plumbing systems because that is not an area in which they have any expertise. The Department does not agree that the cost of inspection for conformity with the building, fire protection, electrical and plumbing subcodes would be "prohibitive" or out of proportion to the value of the service provided.

You're viewing an archived copy from the New Jersey State Library.

Full text of the adoption follows.

5:23-1.4 Definitions

. . . .

"Certificate of continued occupancy" means the certificate provided for in N.J.A.C. 5:23-2, indicating that as a result of a general inspection of the visible parts of the building, no violations of N.J.A.C. 5:23-2.14 have been determined to have occurred and no unsafe conditions violative of N.J.A.C. 5:23-2.32 have been found, and that the existing use of the building has heretofore lawfully existed.

. . . .

5:23-2.23 Certificate of occupancy requirements

(a)-(b) (No change.)

(c) Existing buildings: Upon request of the owner of an existing building or structure, the construction official, with the approval of the subcode officials, shall issue a certificate of continued occupancy provided that there are not violations of law or orders of the construction official pending and it is established after inspection and investigation of available municipal records that the alleged use of the building or structure has lawfully existed. The certificate of continued occupancy shall evidence only that a general inspection of the visible parts of the building has been made, and that no violations of N.J.A.C. 5:23-2.14 have been determined to have occurred and no unsafe conditions violative of N.J.A.C. 5:23-2.32(a) have been found. . . . Nothing in this subsection shall prevent the continued lawful use and occupancy of any such lawfully existing building or structure.

(d)-(k) (No change.)

(a)

DIVISION OF HOUSING AND DEVELOPMENT

Uniform Construction Code Tax Exemptions

Adopted Amendment: N.J.A.C. 5:23-6.1
Adopted New Rule: N.J.A.C. 5:23-6.2

Proposed: February 6, 1984 at 16 N.J.R. 180(a).

Adopted: March 16, 1984 by John P. Renna, Commissioner, Department of Community Affairs.

Filed: March 21, 1984 as R.1984, d.121, **without change.**

Authority: P.L. 1983, c.309.

Effective Date: April 16, 1984.

Expiration Date pursuant to Executive Order No. 66(1978): April 1, 1988.

Summary of Public Comments and Agency Responses: **No comments received.**

Full text of the adoption follows.

SUBCHAPTER 6. TAX EXEMPTIONS

5:23-6.1 Solar facilities

(a) (text of 5:23-6.1)

(b) (text of 5:23-6.2)

(c) (text of 5:23-6.3)

(d) (text of 5:23-6.4)

(e) (text of 5:23-6.5)

5:23-6.2 Automatic fire suppression systems

(a) Applications for tax exemption pursuant to P.L. 1983, c. 309 shall be made on a form prepared by the Department of Treasury, Division of Taxation, and made available to the public at the office of the enforcing agency.

(b) Construction official's responsibilities:

1. The construction official shall have responsibility for determining the eligibility of any proposed automatic fire suppression systems.

2. The construction official shall consult with the appropriate subcode officials in determining conformity with the building and fire protection subcodes and their referenced standards, as well as, where applicable, the most recently published editions of NFPA 13D, NFPA 20, NFPA 22 and NFPA 24. A system shall only be eligible for tax exemption if it conforms to such of these standards as are applicable to that type of automatic fire suppression system and appurtenant installations.

i. A system shall not be deemed ineligible because it is in a new building or because it only provides coverage to part of a building.

3. The construction official shall, in addition, review the cost estimates provided by the applicant.

4. The construction official may require documentation in the form of signed contracts, contractor estimates and the like if he deems it necessary.

5. The construction official shall grant or deny certification of the system prior to issuance of the construction permit and shall notify the applicant of his decision at that time.

6. The construction official shall forward a copy of the approved application for exemption to the municipal assessor for his action upon issuance of the certificate of occupancy or certification of completion.

(c) The enforcing agency, after giving written notice to the owner, may revoke such certification whenever any of the following appears:

1. The exemption was obtained by fraud or misrepresentation;

2. The claimant for tax exemption has failed substantially to proceed with the construction, reconstruction, installation or acquisition of an automatic fire suppression system;

3. The mechanical system to which the certificate relates has ceased to be used for the primary purpose of providing automatic fire suppression and is being used for a different primary purpose;

4. The claimant for tax exemption hereunder has so departed from the equipment, design and construction previously certified by the enforcing agency that, in the opinion of said enforcing agency, the automatic fire suppression system is not suitable and reasonably adequate for the purpose of providing automatic fire suppression.

(d) The construction official shall notify the assessor in writing of the revocation of the certification.

(e) Appeals may be made regarding the decision of the construction official to the Construction Board of Appeals, in accordance with N.J.A.C. 5:23-2.34.

You're viewing an archived copy from the New Jersey State Library.

(a)

NEW JERSEY HOUSING AND MORTGAGE FINANCE AGENCY

Sale of Projects Owned by Nonprofit Corporations to Limited Dividend Partnerships

Adopted Repeal: N.J.A.C. 5:80-2.1
Adopted New Rule: N.J.A.C. 5:80-2

Proposed: August 1, 1983 at 15 N.J.R. 1208(a).
Adopted: February 22, 1984 by Feather O'Connor, Executive Director of the New Jersey Housing and Mortgage Finance Agency.
Filed: March 29, 1984 as R.1984 d.130, **with technical and substantive changes** not requiring additional public notice and comment (see N.J.A.C. 1:30-3.5).

Authority: N.J.S.A. 55:14J-34(f).

Effective Date: April 16, 1984.
Expiration Date pursuant to Executive Order No. 66(1978): April 16, 1989.

Summary of Public Comments and Agency Responses:

5:80-2.1: Comment received regarding clarification of definitions.
Response: The agency amended several definitions in response to the comment received.

5:80-2.2(c): Comment received that Agency approval of fees to nonprofit, its employees or professionals should be conditioned on a standard of reasonableness.
Response: The agency staff has the discretion to review and approve professional fees based upon the complexity of the work performed in accordance with established fee schedules.

5:80-2.2(d)(1): Comment received that this section prevents nonprofits from establishing a second round of bidding limited to highest 2 or 3 bidders of the first round.
Response: The regulations as written do not prohibit a second round of bidding however, the nonprofit sponsor has the responsibility of conducting a thorough review of the initial bids and should a rebidding be requested, sufficient justification must be presented. No change is recommended regarding this section.

5:80-2.2(e): Comment received objecting to $15,000 charge against syndicators letter of credit in the case of an aborted syndication where the syndicator is not at fault.
Response: The Agency has held the position that the $15,000 fee serves as protection to the nonprofit and is a reasonable assessment. The fee will be forfeited in instances where the processing is aborted. No change is recommended regarding this section.

5:80-2.2(e): Comment received to expand syndication period to at least six months.
Response: The agency agreed with this comment and has implemented the charge.

5:80-2.2(e): Comment received to require syndicator to contract for an appraisal within four weeks after being awarded syndication and six month syndication period to begin upon receipt of appraisal.
Response: Based on prior syndications, the agency's experience has been that the time allotted in the regulations is sufficient.

5:80-2.2(f): Comment received that undue burden is put on purchaser to provide cash or letter of credit in addition to stated equity.
Response: Cash or letter of credit is credited towards stated equity.

5:80-2.6(b): Comment received which indicated a conflict between the use of investment income on PSR as specified in this section with the use of investment income on PSR as indicated in N.J.A.C. 5:80-2.7(b).
Response: After reviewing the sections said to be in conflict, the basis of the criticism does not seem justified inasmuch as the uses of investment income stated are generally consistent. N.J.A.C. 5:80-2.7 merely includes language which allows the partners a return on equity for investment income to extent not paid from operating revenues. Therefore no change is recommended.

5:80-2.9(a): Comment received that certain tax consequences arising out of sale of the project should be borne by the DCE, CDE or PSR escrow accounts.
Response: The partnership is prohibited from using escrow accounts to defend tax challenges pertaining to the structure of the partnership. However, the escrow accounts mentioned have been the traditional source of funds utilized for the purpose of enabling the nonprofit sponsor to hire professionals to defend tax challenges brought by the IRS questioning the tax exempt status of the project. New Communities Corp. is an example which comes immediately to mind. Therefore no change is recommended.

Full text of the adoption follows (additions to the proposal indicated in boldface with asterisks ***thus***; deletions from the proposal indicated in brackets with asterisks *[thus]*).

5:80-2.1 Definitions
The following words and terms, when used in this subchapter, shall have the following meanings, unless the context clearly indicates otherwise.
"Agency" means the New Jersey Housing ***and Mortgage*** Finance Agency.
"Cash proceeds" means that portion of the purchase price paid by the partnership to the nonprofit in cash at closing or in successive years following the closing.
"Closing" means the date on which title to the development or project is transferred from the nonprofit to the partnership.
"Community Development Escrow" (CDE) means that fund established pursuant to N.J.A.C. 5:80-2.5(a)2 or 5:80-2.6(b)4 primarily for use in assisting community improvements or services related to the development.
"Conversion" means the overall transaction in which ownership is transferred from the nonprofit to a partnership.
"Development Cost Escrow" (DCE) means that fund established pursuant to N.J.A.C. 5:80-2.5(a)1 intended primarily for use in improving or supporting the project itself.
"Gross syndication proceeds" means the sum of all capital contributions.

You're viewing an archived copy from the New Jersey State Library.

"Net proceeds" means the gross proceeds of the syndication, which are received from investor limited partners, less the costs of the syndication. The net proceeds include all payments made to or on behalf of the nonprofit and may include interest due on deferred payments. The net proceeds may not be used for any purpose other than to pay transaction costs or to fund the DCE or CDE unless otherwise expressly authorized by the Agency. Net proceeds does not include secondary financing granted on the sale from the nonprofit to the partnership.

"Nonprofit" means the nonprofit owner of the project that is conveying its interest in the profit and assigning its Agency mortgage on the premises to the partnership.

"Operating deficits" means all obligations, to the extent such obligations have ***not*** or will not be paid in full out of operating income, arising out of the management and operation of the project including without limitation:

1. Reserves, escrows or fees required by the Agency or by law;
2. Taxes or payments in lieu of taxes;
3. Utility bills;
4. Legal, accounting and other professional fees incurred by the partnership which have received prior approval by the Agency;
5. Insurance premiums; and
6. Judgments or settlements approved by the Agency.

"Original Mortgage Amount" means the amount of the loan which was made to the nonprofit or its predecessors by the Agency for development costs and was financed by bonds *[issured]* ***issued*** by the Agency.

"Partnership" means the limited partnership, which qualifies as a limited dividend housing association pursuant to N.J.S.A. 55:16-1 et seq., which takes title to the project from the nonprofit.

"Portfolio Reserve Account" (PRA) means that fund established pursuant to N.J.A.C. 5:80-2.4(a)3 intended primarily for financial support for any development financed by the Agency.

"Project Subsidy Reserve Fund" (PSR) means that fund established pursuant to N.J.A.C. 5:80-2.6(b) intended primarily for maintaining the operating viability of the Section 236 developments.

"Purchase price" means the total amount of capital pledged to the nonprofit sponsor including cash proceeds and secondary financing.

"Stated equity" means an amount equal to 10 percent of the revised total development cost determined by the Agency pursuant to N.J.A.C. 5:80-2.3.

"Syndication" means the admission of limited partners to the Partnership through the sale of partnership interests.

"Transaction cost" means those costs related directly to the sale of the project which are paid by or on behalf of the nonprofit. All transaction costs must be approved by the Agency and include with limitation required fees and payments specified in N.J.A.C. 5:80-2.4 as well as professional fees of the nonprofit and title insurance.

5:80-2.2 Procedures

(a) The sale of a nonprofit sponsored development to a limited partnership is a complex transaction and involves substantial sums of money. Accordingly, the procedures in this section governing the transaction are intended to insure the integrity of the process and the protection of the nonprofit.

(b) The nonprofit may obtain such legal, financial and other professional services as are necessary to investigate, process and complete the transaction. The scope of all services and compensation for same must be approved by the Agency in advance. The amounts which can be paid for all such professional services may not exceed limits and hourly rates established from time to time by the Agency. If for any reason the conversion is not completed and approved services have been provided to the nonprofit, then the Agency may, if requested by the nonprofit, approve payment for professional services out of other assets of the nonprofit including operating income.

(c) No member of the nonprofit, its employees or professional advisors shall receive any fees in conjunction with the transaction other than those disclosed to and approved by the Agency. The president of the nonprofit, its attorney, the purchaser and the purchaser's attorney shall all provide affidavits at closing stating that to the best of their knowledge, no fees or payments have been made nor will be made to any member of the nonprofit corporation, employees or professional advisor***s*** other than those approved by the Agency.

(d) Since the nonprofit may become a partner with the purchaser of the development, the selection of same will be primarily in the hands of the nonprofit. However, the following procedures must be incorporated into the selection process:

1. While public bidding procedures are not required, equal information *[and]* and opportunity must be provided to all potential purchasers.
2. Initial proposals must be solicited from as many interested parties as possible including all those on a list of interested parties maintained by the Agency.
3. All responses to proposals must be made in writing and should be submitted in a sealed envelope directly to a specific designee of the nonprofit on or prior to a certain date. No proposals shall be opened prior to the specified time and after the time set for submission of proposals, no new proposals should be accepted.
4. Upon opening the proposals, the nonprofit's designee shall immediately forward copies of all proposals to the Agency.
5. The nonprofit shall evaluate the proposals taking into account the initial purchase price offered, the amount of secondary financing involved in the transaction; the residual value to be returned to the nonprofit, if any; management support and control; and a variety of other business considerations. In evaluating all financial considerations, present value calculations should be included.
6. Upon the determination by the nonprofit as to choice of purchaser, it should submit a recommendation to the Agency along with a full report on the reasons behind the decision and an affidavit as to compliance with the procedures described in this section. As mortgagee, final approval of the transaction shall rest with the Agency.

(e) Within 21 days of the Agency's approval of the proposed sale of the project, the prospective purchaser shall deliver to the Agency security, in the form of cash, bond or letter of credit, in an amount equal to five percent of the cash proceeds. This security will be held by the Agency until the purchaser has fulfilled its obligations under the offer and purchase agreement, subject to terms and conditions approved by the Agency. If the purchaser does not fulfill its obligations in accordance with the purchase agreement as approved by the Agency within *[four]* ***six*** months of the approval, then the security funds shall be deposited by the Agency into a Project Subsidy Reserve or Development Cost Escrow established in the name of the nonprofit. If the pro-

You're viewing an archived copy from the New Jersey State Library.

posed purchaser demonstrates its willingness and ability to perform its obligations in accordance with the purchase agreement, and the transaction is not completed within *[four]* ***six*** months of the Agency's approval, the security shall be returned to the proposed purchaser except for an amount not to exceed $15,000, to reimburse the nonprofit for its actual costs incurred in the attempted conversion.

(f) At closing, the purchaser must provide cash or letter of credit in an amount equal to 30 percent of the cash proceeds. The difference between the amount provided at closing and the stated equity amount must be funded at closing with cash or equivalents acceptable to the Agency.

(g) At closing, the purchaser shall deposit with the Agency a deed transferring title in the property back to the nonprofit. This deed will be held in escrow by the Agency subject to an agreement which authorizes the Agency to record the deed if the purchaser fails to pay any installment of the *[purchase price]* ***cash proceeds*** within 120 days of the date due.

5:80-2.3 Determination of total development cost

Prior to granting its approval of the sale of the project, the Agency will make a determination as to the total development cost of the project. The total development cost shall include the original mortgage loan amount and may include any supplemental financing provided by the Agency or the State of New Jersey other than funds provided pursuant to N.J.S.A. 55:14J-45, and any additional funds to be paid out of the net proceeds which the Agen***c***y has determined to be reasonable and necessary for the development or financial viability of the housing project.

5:80-2.4 Required fees and repayments

(a) The following fees and repayments shall generally apply to all sales. However, where the nonprofit can demonstrate that the payment of such fees would be detrimental to the viability of the project these provisions may be waived, adjusted or deferred.

1. At closing, the nonprofit shall pay to the Agency a processing fee of one-half of one percent of the *[purchase price]* ***cash proceeds*** including cash, existing indebtedness assumed and secondary financing.

2. At closing, the nonprofit will pay to the Agency for return to the Revolving Housing Demonstration Fund interest on any seed money originally loaned to the nonprofit. Such interest shall be calculated at a rate of one percent above the prime interest rate as reasonably determined by the Agency for each given year on the amount of outstanding principal from the date on which any disbursement is made until the time of repayment.

3. At closing, for projects subsidized under Section 236 the nonprofit shall pay 10 percent of the cash proceeds received and for projects subsidized under Section 8 the nonprofit shall pay 15 percent of the cash proceeds received into the Portfolio Reserve Account established by the Agency. Funds deposited in the Portfolio Reserve Account and the investment income earned on those funds will be used by the Agency to fund debt service arrearages, operating deficits or essential capital improvements of any project financed by the Agency that cannot fund these items from normal project income.

4. Any supplemental mortgages or advances made by the Agency to the nonprofit shall be repaid at closing.

5. There shall be paid from the interest income on the escrow accounts a yearly Agency administrative fee of $3,500 per project which shall be assessed proportionately against the respective accounts for the project to the extent available.

6. In determining whether required fees and payments pursuant to this section are to be waived, adjusted or deferred or in determining the amount of funds which may be allocated to a CDE on Section 236 projects, the Agency will consider the factors set forth in (a)6i–iv below. Accordingly, the nonprofit shall submit detailed information on the following matters:

i. Operating revenue and expense projections for five years.

ii. The rents expected to be charged at the development assuming reasonable annual increases for five years.

iii. The rents charged and expected to be charged at comparable developments.

iv. The effect on the requested action on (a)6i and ii above.

5:80-2.5 Use of funds ***w***ith regard to developments subsidized under Section 8

(a) While the primary reason for permitting the sale and syndication of Section 8 developments is to insure financial viability of the development, a large portion of the proceeds will be available to the nonprofit to finance community activities. Accordingly, after payment of the amounts required under N.J.A.C. 5:80-2.*[3]* ***4***, the proceeds of the transaction shall be disbursed in the following manner:

1. There shall be deposited into a Development Cost Escrow (DCE) for the project those funds remaining after transaction costs are deducted from 60 percent of the cash proceeds or the stated equity amount whichever is greater. With the approval of the Agency, the DCE shall be used to fund debt service arrearages and other operating deficits at the project and for such other purposes as may be approved by the Agency as will improve the financial viability or physical structure of the project, or increase tenant safety and comfort.

2. The balance of the cash proceeds shall be deposited into a Community Development Escrow (CDE) in the name of the nonprofit. With the approval of the Agency these funds may be utilized by the nonprofit for any use permitted under (a)1 above or to increase amenities of the project; reduce maintenance and replacement costs of the project; provide or assist desirable social services benefiting the residents of the project or the community in which it is located; and finance various community development activities.

5:80-2.6 Use of funds with regard to projects subsidized under Section 236 Interest Reduction Program

(a) These regulations recognize the essential difference between the Section 236 and Section 8 Program. In projects ***subsidized*** through interest reductions, tenants must bear the full responsibility for all other operating costs. Accordingly after payments required by N.J.A.C. 5:80-2.4, all proceeds of the sale of the project will be primarily pledged to easing the burden on the tenants by subsidizing ***repair and maintenance or*** operating costs. If, however, the nonprofit can demonstrate that the project is in sound physical and financial condition and will likely remain so for the forseeable future, a portion of the proceeds o*[f]* ***r*** investment income on the proceeds may be deposited into a CDE.

(b) All cash proceeds received on the sale of a development subsidized under Section 236 shall, after payment of the fees required under N.J.A.C. 5:80-2.4 be deposited into a Project Subsidy *[r]* ***R***eserve (PSR). The income and principal on the PSR may be utilized in the following manner:

1. First to pay any existing operating deficits, *]or]* ***including*** debt service arrearages *[at]* ***of*** the development;

You're viewing an archived copy from the New Jersey State Library.

2. To fund any capital improvements or repairs which are required for the viable operation of the project and cannot be funded out of *[there]* ***other*** reserves at the development;

3. To provide an additional source of operating revenue to assist in financing the normal operations of the project including debt service so that future rent increases can be moderated or so that rents may be maintained, to the extent feasible, at a level which is appropriate to the tenant population for which the development is intended;

4. After the nonprofit has demonstrated, based on information required under N.J.A.C. 5:80-2.4(a)6, that the funds in the PSR are not required for any of the purposes l*[e]* ***i***sted in (b)1-3 above and will not be required for the forseeable future, it may request that a portion of these funds or the investment income on these funds be deposited into a CDE as described in 5:80-2.5.

5:80-2.7 Investment income earned on the PSR, DCE and CDE

(a) After the payment of the fee specified in N.J.A.C. 5:80-2.4(a)5 the investment income earned on the DCE and CDE may be used:

1. To fund current operating deficits and/or arrearages including debt service arrearages of the development;

2. To pay the partners a return on equity to the extent allowed by law and to the extent not paid from operating revenues of the development, but only if there are no operating deficits or arrearages at the development;

3. In accordance with the designated uses of the accounts or for other purposes requested by the nonprofit and approved by the Agency.

(b) After funding the uses described in N.J.A.C. 5:80-2.6(b)1-3 and the required fee specified in N.J.A.C. 5:80-2.4(a)5, the investment income on the PSR may be utilized in the manner set forth in (a) above.

5:80-2.8 Additional terms of purchase

(a) The terms and conditions between the selling nonprofit and the purchasing partnership may vary from transaction to transaction. However, the following matter ***s***hould be considered:

1.-2(i). (No change from proposal.)

ii. That in the event of declaration of a default on any existing mortgage of the Agency, the debt and all rights thereunder to rent or any other project income or assets shall be assigned to the Agency *[;]* ***:***

3. Upon sale or refinancing of the development, or upon termination *[development,]* of the mortgage other than by default, any remaining assets of the development may be shared among the nonprofit, other partners, the Agency and municipality to the extent allowed by law.

5:80-2.9 Tax obligations

(a) The partnership shall be responsible for all tax consequences arising out of the sale of the profit.

(b) All existing contractors shall be notified of the sale and of the fact that they shall be responsible for the payment of all New Jersey sales tax and other taxes arising out of the loss of nonprofit status by the owner from the date of closing forward.

5:80-2.10 Approval and disclosure requirements

The Agency specifically reserves the right to investigate and approve any party involved in the transaction including without limitation all limited and general partners, attorneys, syndicators, brokers or consultants, as well as any partners or shareholders thereof. Prior to its approval the Agency may require any party to disclose such information as may be reasonably related to the transaction and may require any party to sign such waivers, releases or affidavits as may be necessary to authenticate or investigate the information requested.

5:80-2.11 Request for use of escrow funds

All uses of escrow funds or the investment income earned thereon must receive written approval by the Agency in accordance with procedures adopted from time to time by the Agency.

5:80-2.12 Waivers

Any party desiring a waiver or release from the express provisions of these regulations *[are]* ***is*** invited to submit a written request to the Agency to the attention of the Director of Policy Development. Waivers may be granted only by a resolution of the members of the Agency upon a demonstration that the primary purpose of these regulations, for example, the preservation and promotion of housing for senior citizens and families of low or moderate income, is being met.

EDUCATION

(a)

STATE BOARD OF EDUCATION

Appeals (to the State Board)
General Provisions

Readoption with Amendments: N.J.A.C. 6:2-1.1 through 6:2-1.19
Adopted New Rule: N.J.A.C. 6:2-1.20

Proposed: December 5, 1983, at 15 N.J.R. 1977(b).
Adopted: March 7, 1984, by State Board of Education, Saul Cooperman, Secretary.
Filed: March 21, 1984, as R.1984, d.122, **without change**.

Authority: N.J.S.A. 18A:4-1 through 18A:4-20, 18A:6-27 through 18A:6-29 and 18A:7A-25.

Effective Date for Readoption: March 21, 1984.
Effective Date for Amendments and New Rule: April 16, 1984.
Expiration Date pursuant to Executive Order No. 66(1978): March 1, 1989.

Summary of Public Comments and Agency Responses: **No comments received**.

Full text of the adoption follows.

You're viewing an archived copy from the New Jersey State Library.

SUBCHAPTER 1. GENERAL PROVISIONS

6:2-1.1 Filing and service of notice of appeal and cross-appeal

Notice of appeal to the State Board of Education in a controversy arising under the school laws must be taken within 30 days after the commissioner has filed his or her decision in said controversy. Notice of cross-appeal may be taken within 10 days of service of notice of appeal. Notice of appeal or notice of cross-appeal shall be taken by filing with the commissioner and the legal committee of the State Board, at 225 West State Street, Trenton, New Jersey 08625, and serving by registered mail, or certified mail, or ordinary mail with affidavit of mailing, or personally upon the adverse party or his or her attorney a notice of appeal or cross-appeal identifying the decision and stating that an appeal is taken to the Board from it, or from such part of it as may be specified. Proof of service of notice of appeal or cross-appeal shall be filed promptly with the commissioner.

6:2-1.2 Filing of decisions of commissioner

The decision of the Commissioner of Education shall be deemed filed three days after the date of mailing to the parties.

6:2-1.3 Appeals filed

Appeals shall be considered filed upon receipt by the State Board if hand delivered or upon mailing if mailed as provided in N.J.A.C. 6:2-1.4.

6:2-1.4 Filing and proof of mailing of appeals

(a) Filing by mail of appeals covered by this subchapter shall be complete upon mailing. For purposes of computing timeliness of the filing of an appeal, proof of mailing is required.

(b) Proof of mailing of appeal may be shown by one of the following:

1. An affidavit of the person mailing the appeal; or

2. A certificate of mailing signed by the attorney for the party filing the appeal.

(c) Such proof of mailing shall be appended to and accompany the appeal.

(d) Where there is no appended and accompanying affidavit or certificate of mailing, the appeal shall be deemed to have been mailed three days before receipt of the appeal by the State Board.

6:2-1.5 Computation of time

In computing any period of time fixed by this subchapter the day of the act or event from which the designated period begins to run is not to be included. The last day of the period so computed is to be included, unless it is a Saturday, Sunday or legal holiday, in which event the period runs until the end of the next day which is neither a Saturday, Sunday nor legal holiday.

6:2-1.6 Proof of service

(a) Proof of service of appeals may be made by one of the following:

1. An acknowledgment of service signed by the attorney for a party or signed and acknowledged by the party; or

2. An affidavit of the person making service; or

3. A certificate of service appended to the paper to be filed and signed by the attorney for the party making service.

(b) Proof of service shall be filed with the State Board promptly and in any event before action is to be taken on the matter by the State Board. Failure to make proof of service does not affect the validity of the service, and the State Board at any time may allow the proof of service to be amended or supplied unless an injustice would result.

6:2-1.7 Certification of record by commissioner

In every controversy in which the decision of the commissioner has been appealed to the State Board, the commissioner shall certify the record to the State Board upon the filing of notice of appeal, and remit the record, so certified, together with the notice of appeal and proof of service thereof with 15 copies of his or her decision to the chairperson of the legal committee of the State Board. Non-compliance with the provisions of this section shall not invalidate any proceedings.

6:2-1.8 Filing and service of briefs in support of appeal and answering briefs

(a) Within 20 days after the appeal has been taken, the appellant shall file with the legal committee 15 copies of the brief in support of the appeal upon which appellant relies, and shall serve upon the respondent or his or her counsel one copy thereof. Within 20 days thereafter, the respondent shall file 15 copies of his or her answering brief with the legal committee and shall serve one copy thereof upon the appellant or his or her counsel.

(b) Failure to meet the filing deadlines as set forth herein may be viewed as failure to perfect the appeal. Accordingly, on its own motion the State Board may move to dismiss such an appeal. The legal committee of the State Board shall forthwith transmit the copies of briefs so filed, but not as part of the record, to the State Board.

(c) Within 10 days after the filing and service of the answering brief, the appellant may file a reply to the answering brief, which shall conform to the requirements of N.J.A.C. 6:2-1.10 (formal brief of letter brief). Replies to answering brief shall not exceed 15 pages in length.

6:2-1.9 Cross-appeals

Within 30 days after an appeal and cross-appeal have been taken, the appellant shall file with the legal committee 15 copies of the brief in support of the appeal upon which appellant relies, and shall serve upon the cross-appellant or his or her counsel one copy thereof. Within 30 days thereafter, the cross-appellant shall file 15 copies of his or her brief in support of cross-appeal which shall include answer to appellant's brief with the legal committee and shall serve one copy thereof upon the appellant or his or her counsel. Within 10 days thereafter, the appellant shall serve 15 copies of his or her answering brief to the legal committee and shall serve one copy thereof upon the cross-appellant or his or her counsel. Filing deadlines as set forth herein are subject to the provisions as outlined in N.J.A.C. 6:2-1.8(b).

6:2-1.10 Contents of briefs

(a) Formal briefs of the appellant must be typed double-spaced and plainly legible and shall contain the following material under distinctive titles, arranged in the following order:

1. A table of contents, including the point headings to be argued. Any point not presented below must be so indicated by including in parentheses a statement to that effect in the point heading. A concise and specific statement of the educational policies involved in the case.

You're viewing an archived copy from the New Jersey State Library.

2. A concise procedural history including a statement of the nature of the proceedings and a reference to the judgment, order, decision or action appealed from or sought to be reviewed or enforced. The petitioner and respondent shall be referred to as such and shall not, except where necessary, be referred to as appellant or appellee.

3. A concise statement of the facts material to the issues on appeal supported by references to the record and transcript. The statement shall be in the form of a narrative chronological summary incorporating all pertinent evidence and shall not be a summary of all the evidence adduced at hearing, witness by witness.

4. The legal argument for the appellant, under appropriate point headings, distinctively printed or typed, into as many parts as there are to be argued.

5. The legal argument contained within a formal brief shall not exceed 30 pages in length.

(b) Letter briefs, in lieu of filing a formal brief in accordance with (a) above, may be filed by any party. A letter brief shall not exceed 15 pages, single or double-spaced, and shall conform with the requirements of (a)2., 3., 4. and 5. Any point not presented below must have a statement to that effect included in parentheses in the point heading. No cover need be annexed, provided the information required by N.J.A.C. 6:2-1.12 is included in the heading of the letter.

(c) The appellant or cross-appellant may file an appendix provided the appendix shall not include any document already contained in the record made before the Commissioner of Education. Moreover, appellant may not supplement the evidentiary record made before the commissioner unless specific application for inclusion of an item is made to and granted by the State Board of Education.

6:2-1.11 Contents of answering briefs

Answering briefs shall conform to the requirements of N.J.A.C. 6:2-1.10 (formal briefs or letter briefs), insofar as applicable, except that a counter-statement of facts need be included only if the respondent disagrees with such statements in the appellant's brief. Answering briefs shall not exceed 30 pages in length.

6:2-1.12 Covers of briefs and answering briefs

(a) Except as otherwise provided, covers of briefs and answering briefs shall contain the following material:

1. The name of the State Board of Education and the docket number of the action;

2. The title of the action and the designation of the parties;

3. The title of the document and the designation of the party for whom it is filed;

4. The name and office address of the attorney of record and the names of any attorneys "of counsel" or "on the brief".

6:2-1.13 Extensions of time

Upon notice to the State Board, extensions of time for filing briefs, or exceptions, objections or replies to the report of the legal committee, may be obtained by consent of all parties for a period of time not to exceed an accumulative total of 30 days for all extensions in one case. Requests for extensions without the consent of all parties may be granted for a period not to exceed a total of 10 days for any party in one case. Extensions of time, which are opposed, or a combination of opposed and unopposed, may not exceed an accumulative total of 30 days for all extensions in one case. Further extensions of time may be obtained only by leave of the State Board upon a showing of good cause.

6:2-1.14 Functions of legal committee

(a) The legal committee shall supervise the preparation of and make available the entire record to the State Board, which shall include:

1. The entire record before the commissioner;

2. The commissioner's decision;

3. The appellant's briefs and further memoranda; and

4. The respondent's answering briefs and further memoranda.

(b) The legal committee shall transmit to each member of the State Board the following:

1. The commissioner's decision;

2. The appellant's briefs and further memoranda;

3. The respondent's answering briefs and further memoranda; and

4. The report of the legal committee, if any, and any exceptions, objections or replies to the report of the legal committee.

6:2-1.15 Decision of State Board

(a) Oral argument, either before the legal committee or the State Board, will be granted at the discretion of the committee or the State Board only if the respective body is convinced that a party has sufficient reason or additional information not contained in the record to justify that this procedure is necessary for a fair determination of the case. Such reasons must be presented in writing by the party requesting oral argument. Even when reasons are proffered by a party, the committee and/or the State Board can exercise its discretion to deny oral argument when not convinced of the necessity for this procedure to make a fair determination of the case.

(b) Whenever there is a written report of the legal committee, it shall be submitted to all State Board members, and to all parties, and the parties may, concurrently within 10 days of such delivery or mailing, file written exceptions, objections or replies thereto with the State Board.

(c) The entire State Board shall make a final determination with respect to each controversy by resolution in open meeting.

6:2-1.16 Filing for stays from commissioner's decisions

(a) After the filing of a notice of appeal to the State Board from a determination of the commissioner, a motion for stay shall be made first to the commissioner.

(b) A motion for stay to the commissioner shall be done by notice of motion with supporting affidavit, two copies of which shall be filed with the commissioner and a copy served on each party to the action.

(c) The motion and affidavit shall set forth fully that portion of the commissioner's decision with respect to which a stay is sought, the factual basis on which the application for stay is founded, and the reasons favoring the stay.

(d) Any party opposing the application for stay shall file and serve within 10 days of receipt of such application an answering affidavit in the same manner, setting forth the reasons why the application for stay should be denied.

(e) Unless otherwise ordered by the commissioner, there shall be no oral argument on an application for stay.

(f) If motion for stay is denied by the commissioner, it may be made again to the State Board. If motion is granted before the commissioner, a motion to dissolve the stay may be made to the State Board.

(g) A motion for stay to the State Board shall be done by notice of motion with supporting affidavit, 15 copies of which shall be filed with the legal committee of the State Board, and a copy served on each party to the action. A motion to

You're viewing an archived copy from the New Jersey State Library.

dissolve a stay granted by the commissioner shall be made in the same manner.

(h) Unless otherwise ordered by the State Board, there shall be no oral argument on an application for stay.

6:2-1.17 Motions for clarification of a State Board decision

(a) A motion for clarification shall be taken within 10 days after the State Board has filed its decision in said controversy. The decision of the State Board shall be deemed filed three days after the date of mailing to the parties.

(b) Motion for clarification shall state the grounds upon which it is made, and the relief or order sought and shall be supported by an affidavit. Answer or opposition to said motion shall be made within 10 days after the filing of said motion.

6:2-1.18 Notice of motion to appear as amicus curiae

An application for leave to appear as amicus curiae shall be made by motion stating with specificity, the identity of the applicant, the issue intended to be addressed, the nature of the public interest therein and the nature of the applicant's special interest, involvement or expertise in respect thereof. The State Board shall grant the motion if it is satisfied under all the circumstances that the motion is timely, the applicant's participation will assist in the resolution of an issue of public importance, and no party to the litigation will be unduly prejudiced thereby. The order granting the motion shall fix a briefing schedule. An amicus curiae who has been granted a leave to appear in a case before the commissioner may, without seeking further leave, file a brief and appear in an appeal taken to the State Board from the judgment or order entered therein.

6:2-1.19 Appeal from decision of commissioner on school budget cap waiver applications

(a) An appeal to the State Board of Education from a decision of the Commissioner of Education, made pursuant to N.J.S.A. 18A:7A-25 on a cap waiver application, shall be taken within seven days of the filing of the commissioner's decision. The appeal shall be taken by filing with the commissioner and the legal committee of the State Board a notice identifying the decision and stating that an appeal is taken to the State Board from it or such part of it as may be specified.

(b) The commissioner shall certify the record of the cap waiver determination to the State Board within three days after the filing of the notice of appeal, and remit the record, so certified, together with the notice of appeal with two extra copies of his or her decision to the chairperson of the legal committee of the State Board.

(c) Within three days of the filing of the notice of appeal, the appellant may submit to the legal committee of the State Board 15 copies of the arguments upon which the appellant will rely. The arguments may be presented in letter form and shall state the reasons that a thorough and efficient system of education cannot be provided without each of the line items from which the appeal is taken. If no arguments are submitted within the three-day period, the State Board will determine the appeal solely on the basis of the record certified to it by the commissioner.

6:2-1.20 Interlocutory orders, decisions or actions

An application for leave to appeal an interlocutory order, decision or action of the commissioner, or his or her representative, shall be made by filing a notice of motion for leave to appeal to the State Board of Education, within five days after the action or service of the interlocutory decision or order. Appellant shall serve and file a letter brief within 10 days after service of notice of motion for leave to appeal. Respondent shall serve and file an answering letter brief within 10 days after service of appellant's brief.

ENVIRONMENTAL PROTECTION

(a)

DIVISION OF WATER RESOURCES

Flood Hazard Area Delineations Delineated Floodway along the Third River, St. Pauls' Brook, Second River, Second River Tributary, and Nishuane Brook

Adopted Amendment: N.J.A.C. 7:13-1.11(d)

Proposed: September 6, 1983 at 15 N.J.R. 1412(a).
Adopted: March 23, 1984 by Robert E. Hughey, Commissioner, Department of Environmental Protection.
Filed: March 29, 1984, as R.1984 d.131, **without change**.

Authority: N.J.S.A. 13:1D-1 et seq. and 58:16A-50 et seq.

Effective Date: April 16, 1984.
Expiration Date pursuant to Executive Order No. 66 (1978): July 19, 1988.
DEP Docket No. 045-83-07.

Summary of Public Comments and Agency Responses:

The Department of Environmental Protection held a public hearing on the proposed amendment on September 21, 1983, at the Clifton Municipal Building, Clifton, New Jersey. A representative of the Department discussed the delineation process and this proposal and indicated that the amendment was technically correct. A resolution from the City of Clifton supporting the proposal was read into the record. There was no testimony in opposition to the proposal. No written comments were received on this proposal.

Full text of the adoption follows.

7:13-1.11 Delineated floodways

(a)-(c) (No change.)

(d) A list of delineated streams in the Passaic-Hackensack Basin and a list of delineated streams in the Raritan Basin follow:

1.-49. (No change.)

50. . . . The floodway and flood hazard area limits for the portion of the reach of the Third River within the City of Clifton between the Waldrich Bleachery Dam and the second

You're viewing an archived copy from the New Jersey State Library.

Route 3 Highway Bridge. (River Station 25 + 75 to Station 60 + 60.)

(e)-(g) (No change.)

OFFICE OF ADMINISTRATIVE LAW NOTE: A map delineating the flood hazard area described in this notice was submitted as part of the Department's notice of proposed rule. This map can be inspect at:

Bureau of Flood Plain Management
Division of Water Resources
1911 Princeton Avenue
CN 029
Trenton, N.J. 08625; or

Office of Administrative Law
Administrative Filings
88 East State Street
CN 301
Trenton, N.J. 08625

(a)

DIVISION OF WATER RESOURCES

New Jersey Pollutant Discharge Elimination System
Significant Indirect Users; Sludge Quality Assurance

Adopted Amendments: N.J.A.C. 7:14A-1.2, 1.9, 4.5, 10.1, 10.5, 13.1, 13.2 and 7:14-4.4
Adopted New Rules: N.J.A.C. 7:14A-13.5, 13.6, 13.7, 13.8 and 13.9

Proposed: July 5, 1983 at 15 N.J.R. 1059(b).
Adopted: March 27, 1984, by Robert E. Hughey, Commissioner, Department of Environmental Protection.
Filed: March 29, 1984 as R.1984 d.133 **with technical and substantive changes** not requiring additional public notice and comment (see N.J.A.C. 1:30-3.5).

Authority: N.J.S.A. 58:10A-1 et seq., specifically 58:10A-2,4 and 6; and N.J.S.A. 58:11-51.

Effective Date: April 16, 1984.
Expiration Date pursuant to Executive Order No. 66(1978): June 9, 1988.
DEP Docket No. 034-83-06.

Summary of Public Comments and Agency Responses:

The Department held a public hearing at Rutgers University on July 28, 1983 concerning the amendments and the proposed new rules. Approximately 1000 copies of the proposal document were mailed in late June, 1983. The public comment period remained open until August 4, 1983.

Written comments on the proposed amendments were submitted by the following. (An asterisk indicates that testimony was given at the public hearing.):

1. Bergen County Utilities Authority
2. Chemical Industry Council
3. Garden State Paper*
4. Jersey Central Power & Light
5. Johnson Matthey, Inc.
6. Kimberly-Clark
7. League of Women Voters
8. Lower Raritan - Middlesex County Water Resources Assn.
9. Middlesex County Utilities Authority
10. National Solid Wastes Management Assn.
11. New Jersey Business and Industry Assn.
12. New Jersey Water Resources Coalition*
13. Passaic River Coalition
14. Union Camp
15. Warner Lambert Co.

A total of 17 separate issues were identified from the comments received. The following summarizes each comment and gives the Department's response to those comments.

1. Comment: Because they claimed that local sewerage authorities did not have ability, or in some cases the desire, to properly implement an effective pretreatment permit program, several commenters questioned the Department's decision to delegate responsibility for permit issuance to the authorities or other operators of treatment plants. These commenters urged the Department to retain full control of the full-scale NJPDES SIU Permit Program.

Response: Domestic Treatment Works (DTWs) which are being given the permitting responsibility under these amendments have been designated by the Department to develop an Industrial Pretreatment Program (IPP) under the Federal Regulations. The development process involves a review of the legal powers of the various Authorities, and the procedures that the Authorities will follow to implement an effective pretreatment program. Unless an Authority's legal status is sufficient and the procedures and the resources needed to perform a pretreatment program are adequately developed and submitted to the Department, IPP approval will not be granted.

Since these Authorities are responsible under Federal law to issue a permit or contract to industrial users of their system, it is unnecessary and wasteful of scarce resource for the Department to duplicate the routine permit issuance done by the DTWs. For example, the total number of direct discharge permits (DSW) currently being managed by the Department is approximately 2000. By including SIU Permits the number would jump to 6000 permits. Under these amendments the Department will retain permitting responsibilities for approximately 400 SIUs. These include Hazardous Waste Facilities, Industrial Waste Management Facilities, landfill leachate and groundwater discharges, enforcement cases, and users with flow greater than 500,000 gallons per day.

The advantages of local control are not limited to conservation of fiscal and manpower resources. Agencies which are closer to the source of the problem are more likely to find the problems. This is the reason the Department requested and received delegation for the NPDES and Pretreatment Programs from USEPA.

There are two strong actions which the Department can take if the DTW fails to properly carry out its responsibilities.

You're viewing an archived copy from the New Jersey State Library.

First, the permit-by-rule provision, which places all users under the NJPDES Regulations, allows the State to take action directly against an industry if the DTW is unable or unwilling to stop the discharger from committing violations of either the DTW permit or State Standards. If necessary, the Department can require the discharger to file for an SIU Permit under the provisions of N.J.A.C. 7:14A-10.5(a)(1)(iii). Second, if the DTW continuously fails to properly implement the approved IPP, the program approval may be withdrawn by the Department under the provisions of 7:14A-13.8. This action would be immediately followed by the issuance of SIU permits to the indirect dischargers located within the DTW's system.

In addition to the Department's program review efforts, we would expect that local environmental and health groups (both public and private) will keep abreast of the DTW's track record in the enforcement of the local permits. Substantial neglect by the DTWs should be reported to the Department for appropriate action.

DTWs with an approved program are required to submit reports, monitoring data and other information to assure the Department that the permits are being issued and enforced in conformance with pretreatment program requirements. The Federal regulations governing the NPDES program provide a set of procedures which must be followed by the DTWs and the Department. These include an annual report of all pretreatment program activities.

The Department believes that these procedures will provide a far higher degree of protection for the environment than could be accomplished by the State alone. The delegation concept multiplies the resources available for protection of water quality many times over.

2. Comment: A concern was expressed that by delegating control over certain categories of SIUs to the local DTWs, effective control over the SIUs would be lost. This delegation would impede the public's right to know about and to participate in permitting decisions and conditions.

Response: EPA's Pretreatment Regulations, 40 CFR Part 403 require that publicly owned DTWs must generate and maintain detailed records on the effluent of the indirect dischargers who discharge to the DTW's system. 40 CFR 403.8 (f)(2)(ii) requires the DTW to identify the character and volume of pollutants contributed by industrial users. Section 403.8 (f)(2)(iv) requires the DTWs to receive and analyze self-monitoring reports and other notices submitted by industrial users. Section 403.8 (f)(2)(v) requires the DTWs to randomly sample and analyze the industrial user's effluent and conduct surveillance and inspection activities. Section 403.8(f)(2)(vi) requires the DTWs to investigate instances of noncompliance by industrial users. Section 403.8 (f)(2)(vii) requires the DTWs to comply with public participation requirements of 40 CFR Part 25 in the enforcement of National Pretreatment Standards. The procedures for this shall at minimum provide for notification of the public as to these industrial users who were significant violators of pretreatment standards. All of the above impose substantial information and record keeping requirements upon the DTWs.

The Examination and Copies of Public Records statute, N.J.S.A. 47:1A-1 et seq., states that all records which are required by law to be made, maintained or kept on file by state agencies as well as political subdivisions, boards and authorities are open to inspection by the public. This statute provides significant rights to those wishing to inspect both the records of the State as well as those of the local agencies. In addition, as part of the "Water Pollution Control Act," N.J.S.A. 58:10A-1 et seq. and the federal pretreatment regulations, the State is charged with the oversight of the individual DTW's pretreatment program. Thus the State still retains the broad power to investigate the local requirements under which an industrial user is discharging.

Additionally, the Department has modified these regulations to require that DTWs provide an opportunity for the public to comment on the issuance of permits or whatever other contracts or agreements are used to control an industrial user's discharge. This requirement is consistent with obligations stated above and should not impose an onerous burden on DTWs. It also should be noted that the New Jersey "Open Public Meeting Act", N.J.S.A. 10:4-6 et seq., already affords the public the right to comment on DTW's actions, such as the passage of pretreatment ordinances, which affect the local pretreatment program.

3. Comment: Commenters questioned the decision to issue SIU Permits to industries with greater than 500,000 gallons per day of flow into the DTW. One typical comment stated that this action is prejudicial since in some cases this flow is a smaller percentage of the total DTW flow than other industry/DTW percentages which are not required to receive SIU permits.

Response: The Department has reconsidered this decision and decided that the comments are meritorious. The following procedure has been substituted. All initial SIU permits for this class of industry will be issued (19 out of 25 have already been issued). At least 180 days prior to expiration date, the industry must reapply for the permit. As part of the review of the permit application, the Department will have the option of deciding whether or not to allow the permit to expire without taking any action. This decision will be based on the previous compliance record of the facility, the ability of the DTW to adequately control the discharge, and the percentage of flow and loading the discharge is to the DTW. The permit may be renewed at any time if the facility is put into a different SIU category (for example violation of local ordinances ...) or the DTW fails to properly control the industrial discharge. The new N.J.A.C. 7:14A-10.5(g) describes this procedure.

4. Comment: Various commenters offered changes to the equations in N.J.A.C. 7:14A-13.6 and 13.7 to permit more uses of the concept.

Response: The purpose of the equations is to provide an enforcement mechanism against indirect dischargers which cause violations of either water quality standards or sludge quality standards. These equations will only be utilized in the instances where there are no effluent limitations for the indirect discharger but the discharge is creating an environmental problem. It is not intended to be used if there is more than one discharger contributing to the problem. The solution in this case would be to allocate the available loading to the contributing industries. Since none of these industries would individually cause a sludge or water quality violation, no enforcement action would be taken.

The equations which are being used are the simplest form of mass balances for the concept being employed. The use of the equation would entail only one sampling point, at the discharge of the indirect user. No stream or DTW sampling is necessary. All other variables can be calculated based on literature values or existing information. Other models which were suggested to be included in the regulations are more complicated and thus require more information. Greater levels of control will be considered in future rulemaking. Since this model is fair and reasonable, it will remain as the only model within the regulation.

You're viewing an archived copy from the New Jersey State Library.

One commenter thought that the purpose of the equations in the amendments was identical to the purpose of the equations in N.J.A.C. 7:14A-3.14 and therefore, the equations should be adjusted to compare exactly with the original equations. Although similar, the new equations contain the term "R", which refers to the removal efficiency of the DTW. Since the other equations refer to the outfall from a direct discharger, there is no need for the term "R".

Another commenter questioned the derivation of "A", the accumulation efficiency. He claimed that three days sampling may not be sufficient to represent the influent, while the sludge values over those three days would probably be consistent. The Department intends to use, to the extent practicable, existing data on the removal efficiency and accumulation efficiency of types of DTWs. The major data source will be the "The Fate of Priority Pollutants in POTWs," EPA 440/1-82/303. Other sources, including data from the specific DTW, will be used as well. The use of this more extensive data base should alleviate most of the concern relating to the three day sampling period.

5. Comment: One commenter stated that the listing of toxic pollutants required by N.J.A.C. 7:14A-10.5(c)(12) is too broad and should be limited to a specific "reportable quantity."

Response: The particular paragraph requests only these pollutants be listed on the application form. No other reporting or analytical information is being requested for this list of pollutants at that time. The Department will not request further data from the applicant unless it has been specifically identified as a problem at the DTW. We feel that the requirement serves a useful purpose, is not burdensome, and therefore will remain.

6. Comment: Two commenters were concerned that the Department included Industrial Waste Management Facilities (IWMF) in the class of SIUs requiring a permit. The contention was that DTW's in the designated areas would be able to successfully control the discharges from these facilities.

Response: IWMFs, by definition, have a hazardous wastewater which is treated prior to discharge. Failure to properly operate and maintain the pretreatment works could result in a discharge of hazardous waste into the sewer. The Department is very serious in its intention to regulate the treatment, storage, disposal, generation and transport of such material in order to prevent its illegal disposal into the environment. Discharge of hazardous waste into a sewer without treatment to render it non-hazardous is illegal.

The permit to be issued will be a NJPDES/SIU Permit subject to the requirements of these regulations. It is not the intention of the Department to issue NJPDES/IWMF Permits on a routine basis for facilities that are SIUs. Facilities which seriously violate the conditions of N.J.A.C. 7:14A-4.6 may be required to obtain the more stringent IWMF permit.

Since the Department intends to transfer as much of the permit program responsibility to local control as the Authorities are capable of properly managing, a provision has been added to the regulations to allow the initial NJPDES/SIU permit for the IWMF to expire at permit renewal time. The permittee will be required to apply for renewal of the permit. The Department at that time will evaluate the compliance record of the permittee and make a determination if the permit warrants renewal or whether the DTW will become the lead permitting agency. The decision will be subject to public notice requirements.

7. Comment: The inclusion of landfill leachate and groundwater discharges under the definition of SIU required explanation for several commenters.

Response: The discharge of landfill leachate into a DTW is a relatively new disposal technique. Leachate concentrations tend to be extremely variable, especially in situations where the leachate has migrated into the groundwater table and intermixed over a period of time. The long term effects of these discharges is not well established. The past compliance record of landfill owners has also not been consistent. For these reasons, the Department feels that it is in the best interest of the environment to issue NJPDES-SIU permits to all dischargers of leachate into DTWs.

The discharge of groundwater into a DTW usually is created by the cleanup of a polluted aquifer which results from an enforcement action. Since the conclusion of an enforcement action should be a permit action, these discharges are included within the definition of SIU. However, in order to expedite the correction of the pollution problem, certain nonsignificant discharges will not require permits, depending on the quantity, quality, and duration of the discharge. A letter from the Department will satisfy the review requirements for these specific cases. Significant discharges will require permits.

8. Comment: The Department should consider delegating state responsibilities to local public health agencies under the County Environmental Health Act, N.J.S.A. 26:3A2-21 et seq.

Response: The delegation of the Department's responsibilities in the pretreatment area to these agencies might create difficult legal and institutional problems for the Department, and local authorities and municipalities. The Legislature in both the Water Pollution Control Act N.J.S.A. 58:10A-1 et seq., and the Pretreatment Act, N.J.S.A. 58:11-49 et seq., has recognized the value of the authorities and municipalities being responsible for controlling the discharges by industrial users. By delegating this responsibility to local public health agencies a legal conflict might be created with the authorities' responsibilities under the Water Pollution Control Act, the Pretreatment Act and the enabling acts for the local authorities. This delegation might also create an institutional problem by introducing a fourth set of agencies into an existing relationship between the Department, the local wastewater agencies and the industial users.

9. Comment: A couple of commenters requested information on the permit fees for the SIU Permits.

Response: There are currently fees for only landfill leachate discharges and discharges from Hazardous Waste Facilities which commercially treat hazardous waste. The Department intends to propose a fee schedule for the remaining categories of SIUs during the next revision of N.J.A.C. 7:14A-1.8 of the NJPDES Regulations.

10. Comment: Several commenters complained of the requirement that all Hazardous Waste Facilities obtain a NJPDES/SIU permit. They questioned the need for storage and disposal facilities to possess an SIU permit based on the actual potential for hazardous discharge to DTW.

Response: The Department has not intended that storage and disposal facilities would require an SIU permit. The definition of SIU N.J.A.C. 7:14A-1.9 paragraph (v) will be modified to: the user of a DTW is determined to be a Hazardous Waste Facility under N.J.A.C. 7:26-12.1 and meets the requirements of N.J.A.C. 7:14A-4.2(b)(1). This addition specifies that only treatment facilities are subject to the SIU classification and that storage and disposal facilities are exempted, provided that they do not meet the criteria of the other categories of SIUs.

11. Comment: Several commenters requested clarification on the language contained in N.J.A.C. 7:14A-10.5(a)(1)(iii)

You're viewing an archived copy from the New Jersey State Library.

which states that users found to be in significant violation of local ordinances will require an SIU Permit. The concern was that many violations occur which are minor and may not even relate to the discharge.

Response: The Department's intentions by this clause are not to become involved with the day-to-day minor violations of local ordinances concerning the indirect discharger, especially if it does not concern wastewater. It is the responsibility of the DTW to address this type of violation and to react accordingly. Only in the extreme case of consistent, unabated violations which the local authority is not or cannot address satisfactorily, will the Department utilize that part of the regulations to require an SIU Permit.

12. Comment: Several commenters expressed concern with the inclusion of dischargers who contribute, prior to any pretreatment, five percent or more of the daily mass loading of selected pollutants as an SIU. One commenter felt that ignoring pretreatment capacity was unreasonable, another felt this doubled the industries monitoring requirements (monitoring prior to pretreatment and at the point of discharge).

Response: Regarding monitoring requirements, once an industry is established to be discharging five percent or more of the daily mass loading of a selected pollutant, the industry would not be required to continue monitoring prior to pretreatment. Monitoring would only be required at the point of discharge (after any installed pretreatment).

Regarding the reasonableness of "ignoring installed pretreatment capacity," it is the Department's opinion that the potential for upset, pass through, and sludge contamination of the DTW exists where the dischargers raw process wastewater meets the above criteria. Therefore, this requirement will remain.

13. Comment: One commenter wanted the exemption of the requirement for filing for the SIU Permit extended to industries within the service areas of DTWs which are in the process of receiving Program approval as well as the DTWs which have already received approval.

Response: The Department agrees with this comment. Most DTWs which have not received approval are on compliance schedules for completion of the Program. Industries within these DTW's area will be granted the exemptions. However, there are several DTWs which have not signed a consent order with the Department agreeing to a compliance schedule. No exemption will be granted to these industries, and the Department intends to issue SIU Permits to these users.

14. Comment: The new N.J.A.C. 7:14A-13.8 concerning withdrawal of Pretreatment Program approval from the DTW by the Department invited several comments. Foremost was the question which one commenter raised concerning the time for renewal of the program.

Response: The Department feels very strongly that the withdrawal of program approval is an extremely serious action. Every indirect user in the State should be under the control of either a responsible DTW or the Department. If the DTW cannot or will not do an adequate job, the situation must be corrected. Since the Pretreatment Program is incorporated into the DTW's NJPDES Permit, the first step by the Department towards a DTW will be through normal permit enforcement action. If this fails, N.J.A.C. 7:14A-13.8 will be invoked. Industries within an affected area which are subject to the SIU definition will be issued NJPDES/SIU Permits as soon as practicable.

A reapplication for approval will only be accepted at permit renewal time or 5 years after such withdrawal because of the permit action by the Department. The withdrawal of approval is not intended to be an action to be lightly regarded.

Finally, this paragraph was placed in Subchapter 13 instead of Subchapter 3 in order to keep all SIU Permit issues in the same chapter of the regulations.

15. Comment: One commenter requested the NJDEP provide reference to the specific section in the proposed amendments where the sewerage authorities are authorized to issue individual permits.

Response: Sewerage Authorities are not authorized to issue permits under the proposed amendments. DTWs are authorized to issue permits/contracts as part of their Industrial Pretreatment Program (IPP) approval. (See Comment 1 response.) Permitting by a DTW with an approved IPP in place is not restricted to SIUs as defined in these regulations. They may permit any discharger in their service area.

16. Comment: Two comments were received regarding the schedule for submission of SIU applications as stated in N.J.A.C. 7:14A-10.1(h)(4)i. One commenter felt that a 90-day period for preparation of an application was insufficient and recommended that an additional 90 days be provided for application preparation. Both commenters felt that the language dealing with the notification criteria was nebulous, arbitrary and unsatisfactory in providing the regulated community with any certainty as to how or when they would be notified.

Response: The Department agrees to the extension of the period for application preparation from 90 days to 180 days. The Department also agrees to modify the language in N.J.A.C. 7:14A-10.1(h)(4)i for clarification.

17. Comment: One commenter suggested that N.J.A.C. 7:14A-10.5(c)6 would be redundant to the proposed N.J.A.C. 7:14A-10.5(c)18. They also suggested that information regarding in-plant floor drains would be of little benefit.

Response: N.J.A.C. 7:14A-10.5(c)6 requires the submission of information which would identify and describe all sources of wastewater, report the average flow from each source, and identify what treatment if any, each wastewater flow receives. This section also requires information on the ultimate disposal of all solid or fluid wastes other than by discharge. The Department feels that all of this information is necessary for an understanding of all of the facility's discharges.

N.J.A.C. 7:14A-10.5(c)18 requires the facility to indicate the ultimate discharge point of all floor drains, including the path through the facility collection system. This would identify any discharges to surface water or groundwater that may exist. This section no longer requires mapping each individual floor drain.

The Department does not believe these two sections are redundant and believes all of the required information is necessary for the protection of water quality in the State.

Full text of the adoption follows (additions to the proposal shown in boldface with asterisks ***thus***; deletions from the proposal shown in brackets with asterisks *[thus]*).

7:14A-1.2 Scope

(a)-(c) (No change.)

(d) It is the intent of the Department to regulate, but is not limited to, the following by means of the New Jersey Discharge Elimination System (NJPDES) permit program:

1. (No change.)

2. Discharge of industrial pollutants by a significant *[industrial] **indirect*** user ***and any other indirect discharger*** into a municipal or privately owned treatment works. ***All indirect dischargers are required to either obtain and comply with an individual NJPDES permit or comply with the applicable NJPDES permit-by-rule provisions. No exemption, ex-**

You're viewing an archived copy from the New Jersey State Library.

press or implied, conferred by this chapter from the requirement of obtaining an individual NJPDES permit shall be so construed as to bar criminal prosecution under N.J.S.A. 58:10A-10f of any indirect discharger who discharges in violation of the requirements of this chapter applicable to indirect discharges who are not required to obtain individual NJPDES permits. See also N.J.A.C. 7:14A-13.4(c). [Although all discharges to municipal owned treatment works are not required to obtain a NJPDES permit all such dischargers shall conform with 40 CFR 403.]* Although all discharges to privately owned treatment works may not be required to obtain a NJPDES permit such discharges shall comply with N.J.A.C. 7:14-3.13(a)13.

3.-4. (No change.)

(e) (No change.)

7:14A-1.9 Definitions

"Indirect discharger" means any person ***or user***, excluding municipal collection systems, who ***has an indirect discharge of*** *[discharges]* primarily non-domestic pollutants ***, including septage** [into a DTW]*.

. . .

"Significant Indirect User" ("SIU") means, solely for the purposes of this chapter, any user, excluding municipal collection systems, who discharges on any one day wastewater into a DTW where:

1. The volume of industrial process wastewater exceeds 25,000 gallons per day; or

2. The amount of BOD, COD or Suspended Solids in the industrial process wastewater discharge exceeds the mass equivalent of 25,000 gallons per day of the domestic waste of the affected DTW; or

3. The volume of industrial process wastewater in the discharge exceeds five percent or more of the average daily flow of the DTW; or

4. The discharge of industrial process wastewater contributes, prior to any pretreatment, five percent or more of the daily mass loading of any of the pollutants listed in Appendix B Tables II-VI; or

5. The user of a DTW is determined to be a Hazardous Waste *[Management]* Facility under N.J.A.C. 7:26-12 ***and meets the requirements of N.J.A.C. 7:14A-4.2(b)(1)***; or

6. (No change from proposal.)

7. The user has been found by the Department to be in violation of State laws or regulations, or local ordinances ***concerning environmental issues***; or

8. (No change from proposal.)

9. The discharge consists of ***significant quantities of*** polluted groundwater which is pumped from the ground in order to decontaminate an aquifer; or

10. The department determines it would be consistent with the intent of the Pretreatment Act or State Act to ***require a*** permit ***for*** the ***indirect discharger***.

7:14A-4.5 Permits-by-rule

(a) Notwithstanding any other provision of this subchapter or N.J.A.C. 7:14A-7 and 8 the following shall be deemed to have a IWMF permit if the conditions listed are met:

1.-2 (No change.)

3. Wastewater treatment units:

i. The owner or operator at a wastewater treatement unit if he/she complies with the requirements of N.J.A.C. 7:14A-4.6, unless required to have an individual permit under *[(c)2]* **ii.*** below. ***Additional NJPDES Permit requirements which may apply to wastewater treatment units that are industrial waste management facilities are contained in N.J.A.C. 7:14A-3, 6 and 13. Compliance with N.J.A.C. 14A-4.6 does not waive these additional requirements.***

ii. (No change.)

. . .

7:14A-10.1 Schedule for submission of applications

(a)-(g) (No change from proposal.)

(h)1.-3. (No change from proposal.)

4. Dischargers into a domestic treatment works (DTW):

i. Existing SIUs will be notified by the Department at least *[90]* ***180*** days prior to the date for submittal of a permit application. The following criteria *[may]* ***shall*** be used by the Department for determining the order for notifying existing SIUs *[This list is not all inclusive. Some criteria are listed as follows]*:

(1) Potential endangerment to public health or the environment;

(2) DTW permit non-compliance due to interference;

(3) Location of DTW effluent, that is, discharge's effect on present or future stream use;

(4) Restrictions on DTW's sludge disposal; and

(5) The indirect discharge's quantity and quality.

ii. Submittal in less than *[90]* ***180*** days may be required when:

(1) The SIU is subject to an enforcement action by the Department or a local municipality; or

(2) There is or has been a potential danger to public health or the environment due to the SIU's discharge.

5. (No change.)

(i)-(j) (No change.)

7:14A-10.5 Indirect discharges

(a) An individual NJPDES permit is required for an indirect discharger when:

1. The indirect discharger is one of the following types of SIUs ***and does not meet the requirements of (g) below***:

i. The user is determined to be a Hazardous Waste *[Management]* Facility under N.J.A.C. 7:26-12 ***and meets the requirements of N.J.A.C. 7:14A-4.2(b)(1)***;

ii. (No change from proposal.)

iii. The user has been found by the Department to be in significant violation of State laws or regulations, or local ordinances ***concerning environmental issues***;

iv. (No change from proposal.)

v. The discharge consists of ***significant quantities of*** polluted groundwater which is pumped from the ground in order to decontaminate an aquifer;

vi. (No change from proposal.)

vii. The department determines it would be consistent with the intent of the Pretreatment Act or State Act to ***require a*** permit ***for*** the ***indirect*** *[discharge]* ***discharger***.

2. (No change from proposal.)

3. The indirect discharger is an SIU and discharges to a DTW that does not have a Pretreatment Program approved***, or is not in the process of being approved*** pursuant to 40 CFR Part 403 and N.J.A.C. 7:14A-13.1.

(b) (No change.)

(c) An indirect discharger required to apply for a NJPDES permit in accordance with (a) above shall submit the following ***information*** on forms available from the Department:

1.-5. (No change.)

6. Average flows and treatment. A narrative identification of each type of process, operation, or production area which contributes wastewater, cooling water, and storm water run-

You're viewing an archived copy from the New Jersey State Library.

off, the average flow which each process contributes, and a description of the treatment the wastewater receives, including the ultimate disposal of any solid or fluid wastes other than by discharge.

i. Processes, operations or production area may be described in general terms (for example, "dye-making reactor", "distillation tower").

ii. If discharge is due to rain runoff, state acres of land drained, give runoff coefficient, and calculate flow based on a 10-year storm frequency.

7.-9. (No change.)

10. Effluent characteristics. Information on the discharge of pollutants, to a DTW, specified in this paragraph. When "quantitative data" for a pollutant is required, the applicant must collect a sample of effluent and analyze it for the pollutant in accordance with analytical methods approved under 40 CFR Part 136. When no anbalytical method is approved the applicant shall comply with N.J.A.C. 7:14A-2.5(a)10iii. The requirements in (c)10iv and v below that an applicant must provide quantitative data for certain pollutants knwon or believed to be present does not apply to pollutants present in a discharge solely as the result of their presence in intake water, however, an applicant must report such pollutants as present. Grab samples must be used for pH, temperature, cyanide, total phenols, residual chlorine, oil and grease, and fecal coliform. For all other pollutants, 24-hour composite samples must be used, unless otherwise specified by the Department. An applicant is expected to "know or have reason to believe" that a pollutant is present in an effluent, based on an evaluation of the expected use, production, or storage or the pollutant, or on any previous analyses for the pollutant. (For example, any pesticide manufactured by a facility may be expected to be present in contaminated storm water runoff from the facility).

i. Every applicant must report quantitative data for every outfall for the following pollutants:

(1)-(5) (No change.)

(6) Temperature (both maximum and average);

(7) (No change.)

ii.-iii. (No change.)

iv. For each outfall each applicant must report quantitative data for the following pollutants, if the applicant knows or has reason to believe that the pollutant is discharged from the outfall;

(1) (No change.)

(2) All pollutants in Table IV or Appendix B (certain conventional and nonconventional pollutants) except fecal coliform. Oil and grease shall be the petroleum hydrocarbon fraction as determined by freon extraction-silica gel-adsorption-infrared analysis methodology.

v.-vi. (No change.)

11. (No change.)

12. Used or manufactured toxics. A listing of any toxic pollutant listed in Appendix B, Tables II-VI, which the applicant uses or manufactures, or expects that it will use or manufacture during the next five years, as an intermediate or final product or byproduct.

i. The permittee may be required to supply supplemental information to fulfill this requirement during the term of the permit.

13.-16. (No change.)

17. For new discharges only, notification from the affected DTWE and owner of applicable wastewater conveyance systems stating that the discharge is acceptable.

18. Indication of the ultimate discharge point of all building floor drains, including the path through the facility collection system.

(d)-(e) (No change.)

(f) Except for those SIUs which are required by (a) above to obtain a NJPDES Permit, all other SIUs which discharge to a DTW that has a Pretreatment Program, approved pursuant to 40 CFR Part 403 and N.J.A.C. 7:14A-13.1(a), are exempt from applying for a NJPDES Permit and are deemed to possess a NJPDES permit-by-rule and must comply with N.J.A.C. 7:14A-13.5.

***(g) The Department may allow a NJPDES/SIU permit for SIUs enumerated by (a)(l)ii,iii, vi, or vii above to expire after the initial term of the permit is over, without reissuing the individual permit. After expiration of the permit, the discharger shall comply with (f) above and the permit-by-rule provisions in N.J.A.C. 7:14A-13.5. The individual permit will be allowed to expire provided that:**

1. A timely application is made for the permit renewal; and

2. The Department determines that the percentages of flow and loading of the discharges have not and will not have any impact on the DTW, its sludge, or its receiving waters. The decision not to renew the permit will be publicly noticed as per the procedures in N.J.A.C. 7:14A-8.*

7:14A-13.1 Purpose and scope

(a)-(c) (No change.)

(d) The Department may require the owner or operator of a privately owned treatment works to implement the equivalent of an approved pretreatment program pursuant to (a) above.

7:14A-13.2 Application for an SIU permit

(a) Duty to apply: Any person who discharges or is planning to discharge pollutants as an SIU and is subject to N.J.A.C. 7:14A-10.5(a) shall submit a complete appliation to the Department in accordance with N.J.A.C. 7:14A-2.1, 10.1(h) and 10.5(a).

(b) Time to apply for an SIU permit:

1. New SIUS: Any person planing to discharge pollutants as an SIU and subject to N.J.A.C. 7:14A-10.5(a) shall apply for a NJPDES permit at least 90 days prior to initiation of discharge. If a treatment works approval is required, submittal shall be made at least 90 days prir to initation of final engineering design.

2. Existing SIUs: Any person who discharges pollutants as an SIU and is subject to N.J.A.C. 7:14A-10.5(a), as of the effective date of these regulations, shall apply for an SIU permit in accordance with the schedule in N.J.A.C. 7:14A-10.1(h)4.

(c) (No change.)

7:14A-13.4 Conditions applicable to all users of a DTW

(a)-(b) (No change.)

(c) Any person or user of a DTW who willfully or negligently discharges into a DTW in violation of this subchapter may be subject to criminal prosecution under N.J.A.C. 58:10A-10f. A discharge in violation of this subchapter may be deemed as one not in conformity with an individual NJPDES permit or a NJPDES Permit-by-rule, as the case may be, or, in an appropriate case, as a discharge wihout a NJPDES permit.

You're viewing an archived copy from the New Jersey State Library.

7:14***A***-13.5 Permit-by-rule

(a) All indirect dischargers which are not SIUs or which are not required by N.J.A.C. 7:14A-10.5(a) to obtain an individual NJPDES permit ***and which are authorized by the DTW pursuant to N.J.A.C. 7:14A-13.4(a)*** shall be deemed to possess a NJPDES permit-by-rule and must comply with the standards specified in (c) below.

(b) Termination of eligibility for a permit-by-rule.

1. Based upon non-compliance with (c) below, the Department may terminate the eligibility of any indirect discharger for a permit-by rule. Where eligibility for a permit-by-rule has been terminated by the Department, the indirect discharger shall apply for and is required to obtain a NJPDES/SIU Permit in accordance with N.J.A.C. 7:14A-10.5(c).

2. Whenever a DTW's-Pretreatment Program approval has been withdrawn based upon the criteria set forth in N.J.A.C. 7:14A-13.8, all SIUs discharging to the DTW will lose their eligibility for a permit-by-rule and will be required to obtain an individual NJPDES/SIU permit in accordance with N.J.A.C. 7:14A-10.1(h).

(c) Standards for NJPDES/SIU Permit-by-Rule. All indirect dischargers shall comply with the following:

1. *[Prohibited]* ***Standards for prohibited*** discharges *[standards]*, see N.J.A.C. 7:14A-13.3(a)1;

2. Categorical ***pretreatment*** standards, see N.J.A.C. 7:14A-13.3(a)2;

3. DTW ordinances *, **rules and regulations*** which have been approved by the Department, see N.J.A.C. 7:14A-13.3(a)4.

4. Water quality violations, see N.J.A.C. 7:14A-13.6;

5. Sludge quality violations, see N.J.A.C. 7:14A-13.7; and

6. Any other standards promulgated by the Department under the Pretreatment Act or State Act.

7:14A-13.6 Water quality violations

(a) No indirect discharger shall discharge into a DTW any pollutant in such quantities or concentration such that the discharge alone causes the DTW to exceed the values assigned to the toxic substances listed in Appendix F.

(b) The following limitations shall apply in order to control gross pollution of surface waters by any of the pollutants listed in Appendix F. The amount of any substance listed in Appendix F which is discharged by any user shall not exceed the amount W determined by the equations listed below:

1. For discharges into DTWs which discharge into surface waters of the State with essentially one dimensional flow (stream discharge):

i. $$W = \frac{0.0864 \times C \times Q}{1-R}$$

ii. W = The maximum total weight in kilograms per day (kg/d) of a pollutant which may be discharged by an indirect discharger of any pollutant listed in Appendix F, over any 24 hour period.

iii. C = The values for determination of NJPDES permit toxic effluent limitation, in micrograms per liter(ug/1) of any pollutant listed in Appendix F.

iv. Q = The seven day, 10 year, low flow in cubic meters/second (M^3/sec) of the receiving stream immediately downstream of the treatment works outfall.

v. R = Efficiency of a DTW to remove a toxic pollutant from the influent, computer according to the procedure in (c) below.

2. For discharges into DTWs which discharge into surface waters of the State with essentially multi-dimensioanl flow:

i. $$W = \frac{0.0864 \times C \times Q \times S}{1-R}$$

ii. W = The maximum total weight in kilograms per day (kg/d) which may be discharged by an indirect discharger of any pollutant listed in Appendix F, over any 24 hour period.

iii. C = The values for determination of NJPDES permit toxic effluent limitations in micrograms per liter (ug/l) of any pollutant listed in Appendix F. This concentration cannot be exceeded at the water surface at the point indicated as S (see N.J.A.C. 7:14A-3.14(l)3ii).

iv. Q = The effluent discharge flow rate of the treatment works in cubic meters per second (m^3/sec.).

v. R = Efficiency of a DTW to remove a toxic pollutant from its influent, computed according to the procedure in N.J.A.C. (c) below.

vi. S = The dilution factor of the effluent at the surface (see N.J.A.C. 7:14A-3.14(1)3ii).

(c) Removal efficiency (R) may be calculated as follows:

1. The Department will utilize existing DTW data in order to calculate R.

2. An indirect discharger of a DTW may determine at its own expense the removal efficiency. The determination shall be made in accordance with this section. Computation of the removal efficiency of a DTW shall be based upon influent and effluent operational data and any other information which demonstrates consistent removal of the pollutants in Appendix F. This data shall meet the following requirements:

i. The data shall be representative of the quality and quantity of average influent and effluent flow of the system;

ii. The dta shall be obtained through composite samples taken on three consecutive working days. Each composite sample shall contain a minimum of 12 discrete samples taken at equal intervals and proportional to the flow over a 24 hour period; and

iii. Where the Department determines that a composite sample is not an appropriate sampling technique, a grab sample shall be taken. Grab samples will be required where the parameters being evaluated, such as cyanide and phenol, may not be held for any extended period because of biological or chemical decomposition.

7:14A-13.7 Sludge quality violation

(a) No indirect discharger shall discharge into a DTW any pollutant in such quantities or concentration such that the discharge alone cause the DTW to exceed the State's criteria or standards for the disposal of sludge.

(b) The following limitations shall apply in order to control gross contamination of sludge by any of the pollutants listed in Appendix B. The amount of any substance listed in Appendix B which is discharged by any user shall not exceed the amount W determined by the equations listed below.

1. For all DTWs:

i. $$W = \frac{86.4 \times C \times V}{A}$$

ii. W = The maximum total weight in kilograms per day (kg/d) which may be discharged by an indirect discharger over any 24 hour period.

iii. C = Concentration, in milligrams per kilograms (mg/kg) of any Federal or State sludge disposal criteria or standard, for any pollutant listed in Appendix B.

iv. V = Dry weight of sludge generated by DTW (kg/day).

v. A = Efficiency of a DTW to accumulate a toxic pollutant in its sludge from its influent, computed according to the procedure in (c) below.

You're viewing an archived copy from the New Jersey State Library.

(c) Accumulation efficiencies (A) may be calculated as follows:

1. The Department will utilize existing DTW data in order to calculate A.

2. An indreict discharger of a DTW may determine at its own expense the accumulation efficiency. The determination shall be made in accordance with this section. Computation of the accumulation efficiency of a DTW shall be based upon influent and sludge operational data plus any other information which demonstrates consistent accumulation of the pollutants in Appendix B. This data shall meet the following requirements:

i. The dta shall be representative of the quality and quantity of average influent flow and sludge generation of the system.

ii. The data shall be obtained through composite samples on three consecutive working days. Each composite sample shall contain a minimum of 12 discrete samples taken at equal interval sna proportional to the flow over a 24 hour period; and

iii. Where the Department determines that a composite sample is not an appropriate sampling technique, a grab sample shall be taken. Grab samples will be required where the parameters being evaluated, such as cyanide and phenol, may not be held for any extended period because of biological or chemical decomposition.

7:14A-13.8 Criteria for withdrawal of Pretreatment Program approval

(a) The Department may withdraw Pretreatment Program approval when a DTW's program no longer complies with the requirements of this chapter and the DTW fails to take corrective action. Such Circumstances include the following:

1. When the DTW's legal authority no longer complies with the requirements of this chapter, including, but not limited to:

i. Failure of the DTW to enact new legal authority where necessary; or

ii. Action by the DTW's governing body limiting the DTW's legal authority.

2. When the procedures of the DTW's program no longer complies with the requirements of this chapter, including bhut not limited to:

i. Failure to exercise control over activities required to be regulated, inclding the enforcement of National Categorical Pretreatment Standards (40 CFR Chapter I, Subchapter N);

ii. Failure to comply with the public participation requirements of ths chapter (N.J.A.C. 7:14A-80);

iii. Failure to act on violations of permits or other program activities; or

iv. Failure to inspect and monitor activities subject to regulation.

(b) The Department will issue notice of intent to withdraw approval for a program. The notice shall be equivalent to the notice requirements of 40 CFR 403.11.

1. If the problems are not satisfactorily resolved within 90 days of the issuance of the notice, the approval will be withdrawn.

2. The notice shall identify any and all instances of noncompliance with these regulations.

3. A public hearing may be held at the discretion of the Department.

(c) The DTW may reapply for program approval only at the time of NJPDES/DSW Permit renewal or five years from the date of withdrawal, whichever comes first. The reapplication shall identify corrective action taken to mitigate the noncompliance listed in the Department's notice in (b) above.

***7:14A-13.9 Public notice by DTWs**

(a) Prior to approving any proposed new industrial permits, proposed renewed industrial permits or proposed substantial modifications to any existing industrial permit, a list of all proposed new, renewed or modified permits shall be included in the notice for the next normally scheduled monthly meeting of the DTW. Copies of the proposed permits shall be made available to members of the public as requested.

(b) Comments on a permit may be made prior to or during this meeting. If there are no substantive comments submitted or testimony given, the permit may be approved at the meeting. If there are substantive comments or testimony, the DTW shall make a written response to the comments and testimony prior to making a decision on the permit and consider the comments and testimony in the decision on the permit.

(c) For the purposes of this section, "permit" means an authorization, license, or equivalent control document issued by, or contract with, the DTW for an indirect discharge.*

(a)

DIVISION OF FISH, GAME AND WILDLIFE

Nongame and Exotic Wildlife Endangered Species

Readoption with Amendments: N.J.A.C. 7:25-4 and 25-11
Recodification: N.J.A.C. 7:25-11 and 25-20, recodified at 7:25-4

Proposed: January 17, 1984 at 16 N.J.R. 97(b).
Adopted: March 21, 1984 by Robert E. Hughey, Commissioner, Department of Environmental Protection.
Filed: March 29, 1984 as R.1984 d.132, **without change.**

Authority: N.J.S.A. 23:2A-1 et seq.

Effective Date: April 16, 1984.
Expiration Date pursuant to Executive Order No. 66(1978): March 15, 1989.

Summary of Public Comments and Agency Responses: **No comments received.**

Full text of the adoption follows.

SUBCHAPTER 4. ENDANGERED, NONGAME AND EXOTIC WILDLIFE

7:25-4.1 Definitions

(a) The following words and terms, when used in this subchapter shall have the following meanings unless the context clearly indicates otherwise.

You're viewing an archived copy from the New Jersey State Library.

"Nongame Species" means any wildlife for which a legal hunting or trapping season has not been established in New Jersey or which has not been classified as an endangered species by statute or regulation of this State.

"Exotic mammal, bird, reptile or amphibian", means any nongame species or mammal, bird, reptile or amphibian not indigenous to New Jersey.

"Person" shall be defined to include but not limited to corporations, companies, associations, societies including non-profit organizations, firms, partnerships, joint stock companies, individuals and governmental entities.

"Department" means the State's Department of Environmental Protection.

"Division" means the Division of Fish, Game and Wildlife or its successor within the Department of Environmental Protection.

"Director" means the Director of the Division of Fish, Game and Wildlife or its successor within the Department of Environmental Protection.

"Endangered" (E) means a species whose prospects for survival within the State are in immediate danger due to one or many factors: A loss of or change in habitat, over exploitation, predation, competition, disease. An endangered species requires immediate assistance or extinction will probably follow. See N.J.A.C. 7:25-4.12(b) for listing.

"Threatened" (T) means a species that may become endangered if conditions surrounding it begin to or continue to deteriorate.

"Peripheral" (P) means a species whose occurrence in New Jersey is at the extreme edge of its present natural range.

"Undetermined" (U) means a species about which there is not enough information available to determine the status.

"Declining" (D) means a species which has exhibited a continued decline in population numbers over the years.

"Extirpated" (Ex) means a species that formerly occurred in New Jersey, but is not known to exist within the State.

"Introduced" (I) means a species not native to New Jersey, that could not have established itself here without the assistance of man.

"Special case" means a species not known to nest regularly in New Jersey (marine reptiles) but that does occur off our shores, some occurring with regularity close to our shore or in our bays (marine reptiles and mammals).

"Stable" (S) means a species whose population is not undergoing any long term increase: decrease within its natural cycle.

"Increasing" (INC) means a species whose population has exhibited a significant increase beyond the normal range of its cycle, over a long term period.

7:25-4.2-4.10 (No change).

7:25-4.11 Miscellaneous provisions

(a) Any person who transfers possession, as distinguished from ownership, or location of any animal for which a permit has been issued shall, within 48 hours, report to the Division of Fish, Game and Wildlife exactly which animals were transferred and the name and address of the person to whom the animals were transferred.

SUBCHAPTER 11. (RESERVED)

7:25-4.12 List of endangered species

(a) Section 23:2A-4 of the revised statutes provides that the Department shall conduct investigations concerning wildlife in order to develop information relating to populations, distributions, habitat needs, limiting factors and other biological and ecological factors. On the basis of such investigations of wildlife and other available scientific and commercial data, the Department may by regulation promulgate a list of those species and subspecies of wildlife indigenous to the State which are determined to be endangered, giving their common and scientific names by species and subspecies.

(b) (No change.)

7:25-4.13 Requirements for possession of endangered wildlife species

(a) Individuals wishing to apply for a permit to possess endangered wildlife must meet all criteria for the Federal endangered species permit (issued by the United States Fish and Wildlife Service) and for the New Jersey nongame and exotic species permit (issued by the Division of Fish, Game and Wildlife). The Department will require and review the Federal permit before issuing a State permit.

(b) (No change.)

(c) Individuals applying for a permit to possess endangered wildlife species must demonstrate a working knowledge and expertise in handling and caring for the species desired. The individual must be able to demonstrate this expertise and ability to the satisfaction of the Department.

(d) (No change.)

(e) Individuals applying to possess endangered wildlife species must submit to the Department a written statement of the purpose and intent of keeping the species. The statement should provide information regarding the individual's compliance with the purpose and intent of the Federal Endangered Special Act of 1973, Public Law 93-205, 87 stat. 884, and the State Endangered and Nongame Species Conservation Act of 1973, c.309 s.1, effective December 14, 1973. Amateur attempts or intent to propagate an endangered species will not be considered as sufficient purpose for an individual to be issued a permit to keep an endangered species.

7:25-4.14 Protection of animal and welfare of public

(a) Individuals applying for a permit to possess endangered wildlife species must supply a written description of the housing and caging facilities for the species requested. A summary must be submitted of a continuous feed source available for the specific diet of the animals. Department personnel will inspect the completed facilities and determine if the facilities are suitable for the animal. Facilities must be constructed to prevent the possible escape of the animal.

(b)-(c) (No change.)

7:25-[11.4] 4.17 (No change in text.)

SUBCHAPTER 20. [INDIGENOUS NONGAME WILDLIFE SPECIES OF NEW JERSEY] (RESERVED)

7:25-20.1 (Recodified with existing definitions in N.J.A.C. 7:25-4.1 above.)

7:25-[20.2] 4.18 (No change in text.)

You're viewing an archived copy from the New Jersey State Library.

HEALTH

(a)

CONSUMER HEALTH SERVICES

Drug Manufacturing
Drug Manufacturer's Labeling Requirement

Adopted Amendment: N.J.A.C. 8:21-1.32

Proposed: January 17, 1984 as 16 N.J.R. 99(a).
Adopted: March 23, 1984, by J. Richard Goldstein, M.D., Commissioner, Department of Health.
Filed: April 2, 1984 as R.1984 d.143, **without change.**

Authority: N.J.S.A. 24:5-18.

Effective Date: April 16, 1984.
Expiration Date pursuant to Executive Order No. 66(1978) this subchapter expires May 15, 1985.

Summary of Comments Received and Agency Responses:
No comments were received.

Full text of the adoption follows.

8:21-1.32 Drug manufacturer's labeling requirements
(a)-(b) (No change.)
(c) If no person performs all of the applicable operations listed in (b) above, no person may be represented as manufacturer except as follows:
1.-3. (No change.)
4. If the person performs all applicable operations listed in (b) above except for those operations listed in (d) below. For purpose of this section, person, when it identifies a corporation, includes a parent, subsidiary, or affiliate company where the related companies are under common ownership and control.
(d) (No change.)
(e) A person performs an operation listed in (b) above, only if the operation is performed, including the performance of the appropriate in-process quality control operations, except laboratory testing of samples taken during processing, as follows:
1.-2. (No change.)
3. On equipment that is continuously owned or leased by the person. As used in this section, person, when it identifies a corporation, includes a parent, subsidiary, or affiliate company where the related companies are under common ownership and control.
(f) The name of the person represented as manufacturer under (b) or (c) above must be the same as either:
1. The name of the establishment (as defined in N.J.S.A. 24:6B) under which that person is registered at the time the labeled product is produced; or
2. The registered establishment name of a parent, subsidiary, or affiliate company where the related companies under common ownership and control. In addition, the name shall meet the requirements of (g) below.
(g) The requirement for declaration of the name of the manufacturer, packer, or distributer shall be deemed to be satisfied, in the case of a corporate person, only by the actual corporate name, except that the corporate name may be the name of the parent, subsidiary, or affiliate company where the related companies are under common ownership and control. The corporate name may be preceded or followed by the name of the particular division of the corporation. "Company", "Incorporated", etc., may be abbreviated or omitted and "The" may be omitted. In the case of an individual, partnership, or association, the name under which the business is conducted shall be used.
(h)-(m) (No change.)

(b)

DIVISION OF HEALTH PLANNING AND RESOURCES DEVELOPMENT

Hospital Long-Range Strategic Plans

Adopted New Rule: N.J.A.C. 8:31-16.1

Proposed: January 17, 1984 at 16 N.J.R. 100(a).
Adopted: March 23, 1984 by J. Richard Goldstein, M.D., Commissioner, Department of Health (with approval of the Health Care Administration Board).
Filed: April 2, 1984 as R.1984 d.145, **without change.**

Authority: N.J.S.A. 26:2H-1 et seq.

Effective Date: April 16, 1984.
Expiration Date pursuant to Executive Order No. 66(1978): April 16, 1989.

Summary of Public Comments and Department Responses:

Written comments were received during the comment period. Commentors included:
Bergen Pines County Hospital
Ocean County Board of Health

Comment: Bergen Pines County Hospital questions the need to require health status indicators and descriptions of other health care providers, which have little impact on what hospitals plan and only serve to add pages to the planning document.
Response: The proposed new rule requires a data base, at least by county, that is pertinent to the hospital's planning effort. In effect, hospitals are being required to include health status indicators that relate to those types of services that the hospital is including in its planning document. The same is true for the description of other health services and providers requirement, which is intended to be applicable whenever it is pertinent to the hospital's planning effort.

Comment: Bergen Pines County Hospital also feels that the requirement of institutional goals, objectives and courses of action needs further classification since the terminology does not reveal Department expectations.
Response: Further classification is provided in the Planning Guide For Hospital Long-Range Strategic Planning, a De-

You're viewing an archived copy from the New Jersey State Library.

partment publication that is provided to all hospitals and includes definitions of terms and recommendations of methods of achieving compliance with Department expectations.

Comment: Bergen Pines County Hospital further questions the relevance (in its present form) of the fiscal data and capital resources plan required of hospitals, since the purpose of this information is unknown.

Response: This requirement is intended to emphasize the importance of capital formation as a major issue facing hospitals in the 1980's. A combination of factors that include high construction costs, declining reimbursement, and expensive new technology is resulting in a diminishing access to the capital market for increasing numbers of hospitals. Such a requirement serves to focus attention on the integration of fiscal and institutional planning.

Comment: Bergen Pines County Hospital also states that a description of a hospital's services and the utilization of those services is omitted from the requirements.

Response: This indicator is required under 8:31-16.1(c)2 v(3), which requires a description of the hospital that includes "utilization patterns by service".

Comment: The Ocean County Board of Health expressed concern over the elimination of the previous hospital long-range plan rule, which required hospitals to include the public in the planning process. The new rules being proposed requires representation of the community served by the hospital on the hospital planning committee, but does not require the participating of other area health care providers in the hospital planning process. The deletion of this previous requirement eliminates a forum wherein controversial issues can be discussed and evaluated short of formal administrative or legal proceedings. The Ocean County Board of Health therefore requests the retention of the previous language regarding the mandatory inclusion of area health care providers in the hospital planning process.

Response: The previous hospital long-range planning rule cited by the Ocean County Board of Health is a statement that appears in the Planning Guide for Hospital Long-Range Strategic Plans, which was published in error as the actual rule in 1975. This erroneous rule was never acted upon by the HCAB and was meant to be a companion document to a rule, similar to the rule currently being proposed, which has been the basis in actual practice of the hospital long-range plan requirement since 1976. Every hospital in the state has been required to demonstrate community involvement and input into their respective long-range plan development processes. While the participation of area health care providers in a hospital's planning process is to be encouraged, the mandatory participation of all area health care providers in the hospital planning process goes far beyond the Department's intent of encouraging a useful and coherent planning process within all New Jersey health care institutions.

Full text of the adopted new rule follows.

8:31-16.1 Hospital long-range strategic plans

(a) A planning process designed to satisfy the requirement of N.J.S.A. 26:2H-12 is described in the revised "Planning Guide for Hospital Long-Range Strategic Planning," published initially in March, 1975 by the New Jersey State Department of Health. All hospitals shall prepare and submit two copies of their updated long-range plan to the Department of Health on or before July 1, 1984. Following this update, a fully revised five year long-range plan is to be submitted to the Department of Health on or before July 1, 1986. Thereafter, plan submission dates will be at two year intervals unless otherwise specified by the Commissioner of Health.

(b) Under the direction of the governing body of the hospitals, the plan shall be prepared by a committee consisting of representatives of the governing body, the administrative staff, the medical staff, and the community served by the hospital.

(c) The long-range plan shall contain the following information:

1. An analysis of the external and internal environmental factors that are impacting on the institution;

2. Data base, at least by county, that is pertinent to the hospital's planning effort and includes:

i. Demographic profile;

ii. Health status indicators;

iii. Description of other health services and providers;

iv. Relationships of the institution with those services and providers;

v. Description of the hospital to include at least the following:

(1) Patient origin studies by major services;

(2) Health professional staff;

(3) Utilization patterns by service;

(4) Fiscal data to include an analysis of the institution's major financial ratios over time. (for example, liquidity, capital structure, activity, markup and average age of plant ratios);

(5) Medically underserved populations.

3. Forecast of important data: Forecasts at least five years into the future to indicate possible trends for health care needs, services and the institution's capacities;

4. Mission statement;

5. Goals, measurable objectives, and selected courses of action that reflect institutional priorities;

6. Actions requiring Certificate of Need approval or Section 1122 approval (P.L. 92-603) for five years into the future are identified (including anticipated submission dates and sources of funding);

7. A capital resources plan that indicates:

i. The institution's baseline (status quo) financial situation;

ii. The identification of capital gaps (the difference between capital needs and capital sources) that are anticipated in future years;

iii. Potential strategies and their relative impact upon the institution's capital gaps or its access to the capital market;

8. Evaluation of previous institutional planning efforts and the process to be used to evaluate the current plan;

9. Executive Summary.

You're viewing an archived copy from the New Jersey State Library.

(a)

DIVISION OF HEALTH PLANNING AND RESOURCES DEVELOPMENT

Process and General Criteria for the Certification of Need and Designation of Regional Services

Readoption: N.J.A.C. 8:31-28

Proposed: January 17, 1984 at 16 N.J.R. 101(a).
Adopted: March 23, 1984, J. Richard Goldstein, M.D., Commissioner, Department of Health (with approval of the Health Care Administration Board).
Filed: April 2, 1984 as R.1984 d.146, **with technical changes** not requiring additional public notice and comment (See N.J.A.C. 1:30-3.5).

Authority: N.J.S.A. 26:2H-1 et seq., specifically 26:2H-5.

Summary of Public Comments and Agency Responses: **No comments received.**

Although no comments were received, the Department recommends that the reference to CMDNJ in 8:31-28.3(9) be changed to UMDNJ. This change reflects the new official name of the state's medical school.

Full text of the readoption can be found in the New Jersey Administrative Code at N.J.A.C. 8:31-28, as amended in the New Jersey Register.

Full text of the changes upon adoption follows (additions to proposal indicated in boldface with asterisks ***thus***; deletions from proposal indicated in brackets with asterisks *[thus]*).

8:31-28.3 Minimum elements of a specialized health plan
(a) The minimum elements of a specialized health plan, whether initiated by the State or HSAs, shall include the following:
1.-8. (No change from proposal.)
9. An analysis of the needs of health professions education programs in relation to the particular specialized health service. When justified by the analysis, the plan must assure reasonable access of such health professions education programs to the specialized service. Accessibility to the service for the teaching purposes of *[CMDNJ]* ***UMDNJ*** must be documented.
(b)-(c) (No change from proposal.)

(b)

HEALTH ECONOMICS SERVICES

Financial Elements and Reporting

Readopted Amendment: N.J.A.C. 8:31B-4.32

Proposed: February 6, 1984 at 16 N.J.R. 252(a).
Adopted: March 26, 1984 by J. Richard Goldstein, M.D., Commissioner, Department of Health (with approval of the Health Care Administration Board) with change.
Filed: March 26, 1984 as R.1984 d.124, **with substantive changes** not requiring additional public notice and comment (see N.J.A.C. 1:30-3.5).

Authority: N.J.S.A. 26:2H-1 et seq., specifically 26:2H-5b

Effective Date: March 26, 1984.
Expiration Date pursuant to Executive Order No. 66(1978): October 17, 1984.

Summary of Public Comments and Agency Responses:

Comment: How does the Department plan to ensure that the rebundled . . . charges are reasonable and appropriate?
Response: By defining "rebundled" services as hospital Financial Elements, this regulation brings their costs under the authority of the Hospital Rate Setting Commission. It is not necessary to state this in the amendment, but it may be a useful redundancy to do so; therefore language has been added which delineates the authority of the Department and the Commission with respect to rebundled services.
The actual mechanism for evaluating the costs in question is not specified in this amendment. When rebasing occurs these costs will be included in the rate setting process and will be treated in the same way as all other direct patient care costs. In the meantime, charges for special services will be evaluated using data available from the Medicare fiscal intermediaries, and a screening approach that meets with the approval of the Commission.
Whatever mechanism is used in the short run will be abandoned with rebasing, and the lack of lead time for implementation forces that mechanism to be relatively "ad hoc" so as to be adequately flexible. Therefore, the Department felt it would be inappropriate to fix a methodology in regulatory language.

Comment: Federal regulation requires that non-hospital providers who operate major medical equipment, such as CT Scanners or holter monitors, must obtain a certificate of need

You're viewing an archived copy from the New Jersey State Library.

prior to providing services to hospital inpatients. If such providers fail to obtain a certificate of need, their services may not be reimbursed through rate setting.

Response: The Department felt it appropriate to add language to make clear that it does not intend to be in conflict with Federal regulations.

Comment: The New Jersey Hospital Association requested that regulations be promulgated governing the billing of rebundled items, and suggested a change from previous billing instructions.

Response: These comments do not pertain directly to the proposed amendment. The Department will consider these comments and may propose further regulations if it is deemed necessary.

Comment: The proposed amendment should not be written so as to allow "rebundling of non-physician services provided by physicians who operate CT Scanners, NMRs, etc., without obtaining a certificate of need. To do so would be inconsistent with the cost containment goals of Chapter 83.

Response: The Department believes that the added language in the text of the amendment adequately addresses this comment.

Full text of the adoption follows (additions to the proposal indicated in boldface with astericks ***thus***).

8:31B-4.32 Services related to patient care

(a)-(b) (No change.)

(c) All non-physician services and supplies provided to hospital inpatients, whether provided directly by the hospital or by a vendor, will be considered services and costs related to patient care, and are, therefore, financial elements.

(d) All costs of services and supplies purchased from a vendor shall be subject to review for reasonableness by the Department of Health and must be approved by the Hospital Rate Setting Commission. The Commission shall have the right to disapprove reimbursement for services purchased from vendors that are in violation of State or Federal certificate of need regulation.

(a)

DIVISION OF HEALTH PLANNING AND RESOURCES DEVELOPMENT

Certificate of Need: Residential Alcoholism Treatment Bed Standards

Adopted New Rule: N.J.A.C. 8:33K

Proposed: January 17, 1984 at 16 N.J.R. 104(a).

Adopted: March 23, 1984, J. Richard Goldstein, M.D., Commissioner, Department of Health (with approval of the Health Care Administration Board).

Filed: April 2, 1984 as R.1984 d.144, **with substantive changes** not requiring additional public notice and comments (see N.J.A.C. 1:30-3.5).

Authority: N.J.S.A. 26:2H-1 et seq., specifically 26:2H-5.

Effective Date: April 16, 1984.

Expiration Date pursuant to Executive Order No. 66(1978): April 16, 1989.

Summary of Public Comments and Departmental Responses:

Written comments were received during the comment period. Commentors were the New Jersey State Division of Alcoholism, and the Bergen County Division of Alcoholism.

Comment: The Division of Alcoholism indicated that it has traditionally worked closely with Certificate of Need applicants in the preparation of adequately documented applications, and that early consultation and participation with applicants is considered critical. The Division of Alcoholism therefore desires to be identified, within the proposed regulation, as a key partner with local providers and jurisdictions in assisting them with the development of Certificate of Need applications. The Division of Alcoholism recommended that an additional subsection be added to 8:33K-1.16 to reflect this desired intent, and that the title of the section be adjusted to include the subject addition.

Response: The Division of Alcoholism has always made its technical assistance services available to applicants during the planning and preparation phases of the development of Certificate of Need applications for alcoholism services. In doing so, it has provided valuable information to applicants regarding the major programmatic elements which need to be addressed within the narrative of a Certificate of Need to provide alcoholism services. Therefore, in an effort to provide as much technical assistance as possible, language will be added to 8:33K-1.16 requiring that an applicant provide evidence that consultation has taken place with the New Jersey Division of Alcoholism during the planning and development of any Certificate of Need for alcoholism services.

Comment: The Bergen County Division of Alcoholism stated that section 8:33K-1.7, utilization guidelines-adjacent facilities, may inadvertently support mismanaged or ineffective programs by limiting competition. It was suggested that a program's underutilization should be evaluated in light of the reasons for that underutilization, e.g., poor management, as opposed to the service area being saturated with providers. The Bergen County Division of Alcoholism also recommended that the word "should" be changed to "shall" wherever it appears in sections 1.15, 1.16 and 1.17.

Response: One of the primary objectives the proposed rules address is to maximize the utilization of treatment facilities by assuring that providers develop and deliver services as part of a comprehensive system of alcoholism treatment. Existing programs with continuing utilization problems due to poor management, or for any other reason, may not be able to function economically for long, and would probably decide to discontinue services, thereby allowing for the addition of beds to an existing program or for the development of a new treatment program by a new provider.

The Department supports the perspective that alcoholism providers develop and deliver services as part of a comprehensive system. Therefore, applicants will be required to comply with the provisions of sections 1.15, 1.16 and 1.17 by changing the word "should" to "shall." To enable applicants to thoroughly comply with these expectations, the phrase "letters of support" is to be changed to "letters of impact" in 1.16(b)2.

You're viewing an archived copy from the New Jersey State Library.

Full text of the adoption follows (additions to proposal shown in boldface with asterisks ***thus***, deletions from proposal shown in brackets with asterisks *[thus]*).

8:33K-1.1 Introduction

The New Jersey Department of Health currently licenses the provision of alcoholism services when offered under medical supervision in health care facilities. A rather small number of licensed beds (55) are provided in acute care general hospitals. The majority of licensed residential alcoholism treatment beds, however, are located in free-standing facilities that offer an average 28 day treatment program which may, in addition, include five to seven day initial detoxification. These standards in this chapter apply to the addition or establishment of licensed residential alcoholism treatment beds for adults in any existing or proposed health care facility in New Jersey.

8:33K-1.2 Definitions

The following words and terms, when used in this chapter, shall have the following meanings:

"Cost-effective" means to utilize a program and/or service which is less costly than the alternative program and/or service which yields the same output.

"Guidelines" means those general factors to be considered in applying a given standard, or to guide decision-making in areas for which specific standards are not available or would not be appropriate.

"Linkage agreement" means a contract describing the terms and conditions by which two or more agencies agree to supply or refer eligible clients for specified services.

"Medically indigent" means those persons without the financial resources to afford needed health services.

"Residential alcoholism treatment facility" means a facility or a designated unit of a facility which is licensed by the New Jersey Department of Health to provide services specified in the Manual of Standards for Licensure of Alcoholism Treatment Facilities, N.J.A.C 8:42A.

"Service area" means the continuous geographic scope of the outreach, intervention, referral and follow-up activities of a residential alcoholism treatment facility delineated in terms of whole counties within the State of New Jersey.

"Standards" means the specific requirements that applicants must satisfy in developing applications for Certificate of Need approval. To the extent practicable, standards address measurable characteristics that such applications must meet.

"The Department" means the New Jersey Department of Health.

8:33K-1.3 Size of facility

(a) The minimum size of an alcoholism residential treatment facility shall be at least 30 beds.

(b) The maximum size for any single facility shall not exceed 90 beds.

(c) The Department may consider exceptions to the 30 bed minimum size in (a) above when the application demonstrates compliance with one or both of the following conditions, but in no case may the minimum size be below 20 beds:

1. The program is designed to serve special target populations as designated in the alcoholism element in the most currently adopted New Jersey State Health Plan.

2. The program to be provided will be done so in a therapeutic environment and in a cost-effective manner not to exceed the average Statewide charge for free-standing residential alcoholism treatment.

8:33K-1.4 Bed need

(a) The number of beds approved for alcoholism residential treatment shall not exceed need as defined in the alcoholism element in the most currently adopted State Health Plan.

(b) Exceptions may be considered by the Department when the applicant has demonstrated compliance with the following conditions:

1. In a service area where the supply of beds exceeds need, as identified in the most currently adopted State Health Plan, additional beds may be granted to facilities operating existing alcoholism residential care beds if they have maintained an average occupancy rate of at least 90 percent for a period of at least 12 months preceding the submission of its Certificate of Need application.

2. The alcoholism services management information system of the Department will be used to verify occupancy data.

3. All other standards identified herein must be satisfied by the applicant.

8:33K-1.5 Occupancy rate standard for bed additions to existing facilities

Facilities currently with licensed alcoholism treatment beds must have maintained an average 12-month occupancy rate preceding the Certificate of Need Application, of at least 90 percent to justify an increase in bed capacity. The applicant must provide plans demonstrating that at the proposed new capacity, occupancy will be at least 90 percent on an annual basis after the second year of operation. The Department's management information system will be used to verify occupancy data.

8:33K-1.6 Average length of stay guidelines for bed additions to existing facilities

Average Length of Stay (ALOS) in facilities seeking to add beds to an existing alcoholism residential treatment facility shall not exceed 28 days for the last 12 months for which data has been reported to the Department of Health, unless a justification for a longer ALOS is documented to the satisfaction of the Department. Justification may include the special nature or characteristics of the client population, and/or the specific approach or focus of the treatment program.

8:33K-1.7 Utilization guidelines; adjacent facilities

Occupancy rates in all licensed residential alcoholism treatment facilities located within the applicant's proposed service area, or within 30 straight miles of the applicant facility, should have been at least 90 percent during the most recent six month reporting period prior to the application.

8:33K-1.8 Addition of residential alcoholism care beds to hospitals

(a) Licenced general hospitals seeking approval for establishment of residential alcoholism care beds within the hospital may not increase total licensed bed capacity as a result of the project and must convert a comparable number of existing licensed beds to this use. New construction projects are not approvable. Only applications involving modernization and/or renovation will be considered for approval.

(b) Waiver of (a) above may be granted to projects sponsored directly by hospitals or by subsidiary corporations of hospitals involving establishment of free-standing residential alcoholism treatment programs. Priority consideration for granting of this waiver shall be given to projects involving conversion of existing underutilized health care facilities in

You're viewing an archived copy from the New Jersey State Library.

which capital costs are limited to minor modernization or renovation.

8:33K-1.9 Length of stay/occupancy projections; new facilities

Average length of stay projections based on program design should not exceed 28 days unless a justification for a longer ALOS is documented to the satisfaction of the Department. Justification may include the special nature or characteristics of the client population, and/or the specific approach or focus of the treatment program. The applicant should provide plans demonstrating that at least 90 percent occupancy will be achieved and maintained by the end of the second year of operation.

8:33K-1.10 Cost-effectiveness standard

A determination regarding the cost-effectiveness of any application will be based on comparing actual costs to the reasonableness cost criteria (screens) contained in the current rate-setting methodology.

8:33K-1.11 Continuity of care

(a) Linkages with community alcoholism treatment agencies for purposes of referral and follow-up must be adequately documented by the facility. Evidence must be attached indicating that formal transfer and/or program linkage agreements will be established with each of the following agencies within the facility's service area:

1. Alcoholism treatment facilities and acute care hospitals;
2. Alcoholism aftercare services;
3. Supportive or ancillary services; and
4. Emergency medical services.

8:33K-1.12 Admission criteria

(a) An admissions criteria and/or policy must be developed by the applicant and included as part of the Certificate of Need application.

(b) A written admissions criteria and/or policy should, at a minimum, address the following:

1. Diagnostic or other patient characteristics or factors both acceptable and unacceptable for admission;
2. A description of alternative procedures to be followed with those individuals deemed unacceptable for admission to the facility; and
3. A level of commitment to serve the medically indigent as negotiated by the applicant with the Department of Health.

8:33K-1.13 Treatment program

(a) The applicant must describe in detail the proposed treatment process to include at a minimum the following elements demonstrating compliance with the Manual of Standards for Licensure of Alcoholism Treatment Facilities, N.J.A.C. 8:42A:

1. Intake and assessment;
2. Treatment planning;
3. Modalities of treatment; and
4. Medical and nursing services.

8:33K-1.14 Staffing patterns

The applicant shall document how staffing complies with the Manual of Standards for Licensure of Alcoholism Treatment Facilities, N.J.A.C. 8:42A, and shall include at a minimum a listing of:

1. Job classifications;
2. Job descriptions; and
3. A table of organization.

8:33K-1.15 Physical environment

(a) The applicant shall describe the proposed site location and physical plant, include a prospective floor plan, and provide evidence that the proposed facility will comply with the Manual of Standards for Licensure of Alcoholism Treatment Facilities, N.J.A.C. 8:42A.

(b) Applicants proposing the use of an existing building *[should]* ***shall*** include the results of a pre-Certificate of Need building inspection performed by the New Jersey State Department of Health.

8:33K-1.16 *[Local endorsement]* ***State/local project development consultation***

(a) The applicant shall provide evidence of consultation with the State Division of Alcoholism during the project development process of the Certificate of Need application for alcoholism services.

*[(a)] ***(b)*** The applicant must provide evidence of local involvement in the project development process.

1. The applicant *[should]* ***shall*** include evidence of project consultation with officially licensed or approved alcoholism planning and service delivery agencies in the proposed service area, including State and/or County funded alcoholism agencies.

2. The applicant *[should]* ***shall*** include letters of *[support]* ***impact*** for the proposed project from officially licensed or approved alcoholism planning and service delivery agencies in the proposed service area, including State and/or County funded alcoholism agencies.

8:33K-1.17 Local advisory committee on alcoholism review

The applicant *[should]* ***shall*** provide a copy of the completed Certificate of Need application, at the time of submission to the State Department of Health, to the Local Advisory Committee(s) on Alcoholism in the proposed service area for their review and comment. The comments of the Local Advisory Committee(s) on Alcoholism should be made available to both the Health Systems Agencies in the proposed service area, and to the Department.

HUMAN SERVICES

(a)

DIVISION OF MEDICAL ASSISTANCE AND HEALTH SERVICES

Long Term Care Services Manual
Subchapter 1–General Provisions

Readoption: N.J.A.C. 10:63-1.1, 1.2, 1.4, 1.7–1.13, 1.15, 1.16, 1.18–1.22
Adopted Amendments: N.J.A.C. 10:63-1.3, 1.5, 1.6, 1.14, 1.17

Proposed: February 6, 1984 at 16 N.J.R. 204(a).
Adopted: March 20, 1984 by George J. Albanese, Commissioner, Department of Human Services.
Filed: March 21, 1984 as R.1984 d.123, **without change**.

You're viewing an archived copy from the New Jersey State Library.

Authority: N.J.S.A. 30:4D-6a(4)(a), b(14), 7 and 7b; 1905(a)(4)(A) and (a)(15) of the Social Security Act and 42 CFR 440.40(a) and 440.150.

Effective Date of Readoption: March 21, 1984.
Effective Date of Amendments: April 16, 1984.
Expiration Date pursuant to Executive Order 66(1978): March 21, 1989.

Summary of Public Comments and Agency Responses: **There were no comments on this proposal.**

Full text of the adopted amendments to the readoption follows.

10:63-1.3 Required services
The following services are included in the per diem rate.
(a)-(k) (No change.)
(l) Social services:
1. Staff:
i. The LTCF may elect to either provide social services directly or arrange with an appropriate social service agency, usually the county welfare agency, for the provision of social services.
ii. Social Services staff shall meet the qualifications for Social Work Designee and Social Worker as defined in the Health Department Manual of Standards for Licensure of Long Term Care Facilities (see N.J.A.C. 8:39-1.1, entitled Definitions and/or qualifications, and N.J.A.C. 8:39-12, entitled Social Services).
iii. The Division of Medical Assistance and Health Services hereby incorporates the definitions pertaining to "social worker" and "social work designee," and New Jersey Department of Health regulations (cited above) governing social services. A copy of these regulations may be obtained by writing to either one of the following:

Administrative Practice Officer
Division of Medical Assistance
and Health Services
CN 712
Trenton, NJ 08625
or
New Jersey Department of Health
Health Facilities Services
CN 367
Trenton, NJ 08625

2. In addition to the Health Department regulations, LTCFs who are licensed as skilled nursing facilities must either employ a qualified social worker or have agreement with a qualified social worker or recognized social service agency for consultation and assistance on a regularly scheduled basis.
i. A qualified social worker is an individual who has, as a minimum, a Bachelor of Social Work degree from a school accredited by the Council on Social Work Education, and has one year of social work experience in a health care setting.
ii. The federal regulations which are the basis for this requirement are Medicare Regulations 20 CFR 405.1101(s) and 20 CFR 405.1130.

10:63-1.5 Utilization control
(a) (No change.)
(b) Utilization review is a continuous program of review of the need for services to eligible individuals which includes:
1. Certification of medical necessity: The Medicaid MET must determine necessity for long term care and the level of care in all cases of a Medicaid eligible patient except transfer from a general or special hospital to a LTCF (See Appendix-A, List of Special Hospitals).
2. Assessment-reassessment of care requirements:
i. The medical needs of all Medicaid eligible patients referred for long term care will be assessed and conferenced by the MET prior to authorization of long term care.
ii. Initial assessment of all patients admitted to LTCFs from a general or special hospital will be done within 30 days.
iii. Continuation of long term care will be dependent on authorization by the MET at intervals up to six months for Level III, and not more than 12 months for intermediate Levels IV-A and IV-B.
3. (No change.)
(c)-(h) (No change.)

10:63-1.6 Authorization process
(a)-(d) (No change.)
(e) Prior authorization rules are:
1.-2. (No change.)
3. The maximum durations for a single authorization for long term care are as follows:
i. Level III-6 months;
ii. Level IV-A 12 months;
iii. Level IV-B-12 months.

NOTE: Although an authorization may be given for a maximum period of time as indicated above the MET may give an authorization for a shorter period of time.

(f)-(g) (No change.)
(h) Reauthorization procedures are:
1. Within forty-five days before the expiration of an authorized period of LTCF services, a Regional Staff Nurse shall assess the needs of the patient to determine the patient's current health status, continuing need for long term care and/or other appropriate alternatives.
2. The MET will re-evaluate the available data to determine need of continued LTCF placement and the appropriateness of alternatives.
3. If the MET decision changes the patient's level of care, the MCNH-7 (Exhibit No. 3) will serve as notification to County Welfare Agencies, Long Term Care Facilities, and the Bureau of Claims and Accounts.
(i)-(k) (No change.)

10:63-1.14 Records
(a) As a condition for participation in the New Jersey Medicaid Program it is required that LTCFs maintain medical, nursing, social, patient activities and billing records on all long term care Medicaid patients in accordance with accepted professional standards and practices.
(b) (No change.)
(c) Required nursing records are:
1.-2. (No change.)
3. Nurses' notes:
i.-ii. (No change.)
iii. Nursing entries shall be made as often as necessary based on the Medicaid patient's condition. The minimal requirements by level of care are:
(1) Skilled Nursing Care (Level III) Medicaid patients shall have daily summaries for the first five days after admission written by staff of each shift and thereafter summaries writ-

You're viewing an archived copy from the New Jersey State Library.

ten, at least once every 30 days, or more frequently as necessary.

(2) Intermediate Care (Level IV-A) Medicaid patients shall have daily summaries for the first five days after admission written by staff of each shift and thereafter summaries written at least once every 60 days, or more frequently as necessary.

(3) Intermediate Care (Level IV-B) Medicaid patients shall have daily summaries for the first five days after admission written by staff of each shift and thereafter summaries written at least once every 90 days, or more frequently as necessary.

4.-6. (No change.)

(d)-(f) (No change.)

10:63-1.17 Non-covered services

(a) In addition to the general exclusions listed in Chapter I, non-covered services in LTCFs include but are not limited to the following:

1.-3. (No change.)

4. Services and supplies not related to the care of the patient, e.g., guest meals and accommodations, television, telephone, personal items, etc.

5. (No change.)

(a)

DIVISION OF PUBLIC WELFARE

Public Assistance Manual
Child Support Program

Adopted New Rule: N.J.A.C. 10:81-11
Adopted Repeal: N.J.A.C. 10:81 Appendix D

Proposed: February 21, 1984 at 16 N.J.R. 328(a).

Adopted: April 2, 1984 by George J. Albanese, Commissioner, Department of Human Services.

Filed: April 2, 1984 as R.1984 d.147, **with technical changes** not requiring additional public notice and comment (see N.J.A.C. 1:30-3.5).

Authority: N.J.S.A. 44:7-6 and 44:10-3 Title IV-D of the Social Security Act, 45 CFR Part 232, 45 CFR Chapter III.

Effective Date: April 16, 1984.

Expiration Date pursuant to Executive Order No. 66(1978): April 16, 1989.

Summary of Public Comments and Agency Responses:

Comments were received from three county welfare agencies and from the County Welfare Directors' Association of New Jersey.

One county welfare agency suggested that: forms referred to in N.J.A.C. 10:81-11.9(b) (CSP-157) and 11.9(e) (CSP-158) be attached to transmittal letter; probation departments as well as county welfare agencies mentioned in N.J.A.C. 10:81-11.9(d)2 be permitted to initiate filiation proceedings; county welfare agencies in N.J.A.C. 10:81-11.9(d)2v(1) have discretion in filing "John Doe" cases; and, the defendant in N.J.A.C. 10:81-11.9(d)2ii(1) pay for blood tests even if he is found not to be the father or, in the alternative, the client be charged with an overpayment if she has wrongly asserted the defendant was the only possible father.

The second county welfare agency suggested that: reference to "IM worker" throughout N.J.A.C. 10:81-11 be changed to "Income Maintenance Unit"; and amendment be made to N.J.A.C. 10:81-11.5(f)1i which accepts proof of incest or rape as good cause for noncooperation in filiation proceedings.

The third county welfare agency and the County Welfare Directors' Association of New Jersey objected to the promulgation of N.J.A.C. 10:81-11.6 which equally divides incentives for the tax refund offset program between the State and counties.

Response:

The first county welfare agency should note that Forms CSP-157 and CSP-158 are readily available to the counties; N.J.A.C. 10:81-11.9(d) does not limit the initiation of filiation proceedings to the county welfare agencies; county welfare agencies do have discretion in filing "John Doe" cases under N.J.A.C. 10:81-11.9(d)2v(1); and, a man found not to be the father should not have to pay for the "blood tests" nor is there a need to specify a penalty for a client who wrongly claims he was the only possible father since she then may be sanctioned for noncooperation and may be deleted from the assistance grant.

The second county welfare agency's request that all references to "Income Maintenance worker" be replaced with "Income Maintenance unit" is unnecessary because "worker" applies to members of the income maintenance staff without regard to the specific title; also, N.J.A.C. 10:81-11.5(f)1i should not be changed because incest and rape are legal, sociological and psychological problems which should be dealt with outside the IV-D Program.

The third county welfare agency's and the County Welfare Directors Association's request to amend N.J.A.C. 10:81-11.6 provisions for splitting tax refund incentives between the State and counties does not take into account the large expenses incurred by the State in starting up and carrying out these programs. Among these expenses are the fees paid to the Federal Internal Revenue Service and to the State Department of Treasury for the Tax Offset services, all data processing costs to run the entire program as well as staff costs for conversion of cases not submitted by the counties. The present division of incentives is in line with Federal Regulation 45 CFR 302.52(e) and Federal guidelines on the distribution of incentives in joint efforts.

Summary of Changes Subsequent to Proposal:

The following changes are merely technical corrections to publication errors:

N.J.A.C. 10:81-11.4(a)	Capitalize the word "titles"
(b)	Change the word "form" to "from"
11.5(e)2ii	Change the word "reduce" to "reduces"
(e)3	Change the word "for" to "of"
11.9(d)1	Pluralize the word "proceeding"
(e)1	Change "that" to "the"
(h)1	Pluralize the word "payment"
(h)8	Capitalize the word "office"
(i)2iii	Capitalize the word "forms"
(i)8i	Pluralize the word "correction"
(j)1	Hyphenate "Non-Public" Assistance
11.11(a)	Change the word "the" to "to"

You're viewing an archived copy from the New Jersey State Library.

11.12(a)1	Delete the parenthesis in front of the number 3 in the reference
11.15(a)1vii	Change to read, "State Department of Corrections"

Full text of the adoption follows (additions to proposal indicated in boldface with asterisks ***thus***; deletions from proposal indicated in brackets with asterisks *[thus]).

SUBCHAPTER 11. CHILD SUPPORT AND PATERNITY

10:81-11.1 Introduction

The regulations contained in this subchapter are applicable to the AFDC program in New Jersey. P.L. 93-647 establishes Title IV-D of the Social Security Act, which mandates procedures for enforcing support obligations owed by absent parents to their children, locating absent parents and establishing paternity for children born out-of-wedlock. If any regulations herein contradict or conflict with any previously published portions of this manual, such material shall be superseded by this subchapter, except as stated in N.J.A.C. 10:81-11.16(a)2.

10:81-11.2 Eligibility requirements

(a) In addition to the eligibility requirements contained in N.J.A.C. 10:81-3 and 5, requirements for AFDC eligibility shall include the following:

1. Social Security numbers: Applicants for AFDC (all segments) must provide Social Security numbers for all persons for whom assistance is requested (see N.J.A.C. 10:81-11.3).

2. Assignment of support rights: AFDC-C and F applicants or recipients as a condition of eligibility automatically assign to the county welfare agency all rights to support from the children's absent parent(s) or any other person to which the eligible children, or the applicant when he or she is included in the eligible unit, may be entitled (see N.J.A.C. 10:81-11.4).

3. Cooperation: The AFDC applicant shall be required to cooperate in obtaining support to which members of the eligible unit are entitled (see N.J.A.C. 10:81-11.5).

(b) Child support and paternity regulations contained in this subchapter are not required for the Cuban/Haitian Entrant Program (CHEP) or the Refugee Resettlement Program (RRP). Although county welfare agencies will not receive incentive payments for amounts collected for individuals in those programs, there is no bar to utilizing the methods herein to ensure collection of child support.

10:81-11.3 Social Security numbers

(a) The AFDC applicant shall supply the CWA with the Social Security number of each member of the eligible unit or apply for a Social Security number for any such person who does not already have one (see (c) and (e) below).

(b) Recording the Social Security number: The IM worker shall record, in the appropriate spaces on Form CSP-158 (Case Preparation Information Sheet) or CODES Form 105, as appropriate, and Form PA-1J (Application and Affidavit for AFDC, MA, CPP, RRP, CHEP and Food Stamps) the Social Security number of each person who is included in the AFDC grant.

(c) Obtaining a Social Security number: The CWA shall obtain a supply of Social Security Form SS-5, sufficient to accommodate all AFDC applicants who do not already have Social Security numbers. Upon application or redetermination, such applicant/recipient shall be required to sign Form SS-5. The IM worker shall complete Form SS-5 on the basis of information provided by the applicant/recipient. Completed forms shall be forwarded to the Social Security Administration; Enumeration Branch; 38 Courtright Street; Wilkes-Barre, Pennsylvania, 18702. A copy of the SS-5 form shall be retained in the case record, and a copy given to the client if so requested.

1. Documentation of application for Social Security number: The IM worker shall record in the case record the date upon which Form SS-5 was prepared.

2. Failure to obtain Social Security number: If any recipient has not obtained or applied for the appropriate Social Security number by the time of redetermination, the CWA shall declare such person ineligible. The needs of that individual shall be deleted in accordance with N.J.A.C. 10:82-2.4.

(d) Verification of Social Security number: If the IM worker has reason to believe that the Social Security number supplied by the AFDC applicant/recipient is erroneous, such Social Security number shall be verified by means of Form SS-5.

1. Documentation of request for verification of Social Security number: The IM worker shall record in the case record the date upon which Form SS-5 was prepared.

(e) Benefits pending issuance or verification of a Social Security number: AFDC benefits shall not be denied, delayed, or terminated pending issuance or verification of a Social Security number so long as the applicant/recipient has complied with the provisions of (a) through (d) above.

10:81-11.4 Assignment of support rights

(a) State law provides that application for or receipt of AFDC shall automatically operate as an assignment to the county welfare agency of any rights to support under *[titles]* ***Titles*** IV-A and IV-D of the SSA, except in those cases in which the only legally responsible relative is a member of the eligible unit or is the incapacitated parent in an AFDC-C case.

(b) Purpose: Upon application for AFDC benefits, each applicant/recipient assigns to the county welfare agency all rights to support *[form]* ***from*** the absent parent of the AFDC children and any other legally responsible relative to which the eligible unit may be entitled and includes any support obligation which has accrued at the time such application is executed.

(c) Applicability: The assignment of support rights applies only to the AFDC program; it is not an eligibility requirement for AFDC Medicaid Only, Cuban/Haitian Entrant Program, or the Refugee Resettlement Program.

(d) IM worker's responsibility: The IM Worker shall advise the AFDC applicant/recipient that upon signing an application (PA-1J) for AFDC he or she assigns to the county welfare agency any rights to past due support and future support and subsequent to its completion, he or she shall be responsible for informing the county welfare agency of any payments which may be received either directly or through the probation department from an absent parent. Additionally, the AFDC applicant/recipient shall be informed of his or her cooperation responsibilities (see N.J.A.C. 10:81-11.5).

1. Referral to CSP Unit: The IM worker, at the time of application for AFDC-C, shall complete the appropriate parts of the CSP referral document and route this form to the CWA/CSP Unit within two working days of issuance of an assistance check.

i. Relationship to application process: The fact that eligibility is not immediately established shall not delay routing of the CSP referral document to the CSP Unit. However, when a case is determined ineligible the IM worker shall notify the CSP Unit promptly.

You're viewing an archived copy from the New Jersey State Library.

ii. Direct support payments: The IV-A Unit shall treat assigned support payments retained in the current month as income in determining need and amount of assistance payments.

iii. Overpayment resulting from direct support payments: When a full grant has been issued, any support payments received directly by the applicant/recipient shall upon receipt be returned to the CWA/CSP Unit. If the support payment is not returned, it must be collected by the CWA/CSP Unit, upon termination of the client from AFDC if not sooner.

iv. Termination or suspension of assistance: In the case of termination or suspension of assistance the IM worker shall concurrently send a copy of the adverse action notice to the AFDC recipient and the CWA/CSP Unit (see N.J.A.C. 10:81-11.12). The CSP Unit shall be notified immediately if assistance is continued pending or following a fair hearing.

10:81-11.5 Cooperation in establishing paternity and obtaining support

(a) Cooperation in obtaining support and establishing paternity whenever necessary is a condition of eligibility for AFDC for each applicant and recipient. The IM worker (and supervisor) has responsibility for the determination of whether or not good cause for refusal to cooperate exists. This determination shall be based on evidence provided by the client and on consultation, where appropriate, with the CSP Unit.

(b) Notice to applicant or recipient: At the time of application, the IM worker will explain to the client the requirements for cooperation in connection with establishment of paternity and collection of support. The worker shall also provide a written notice (PA-46) of the client's right to claim good cause for refusal to cooperate. Should the client claim to have good cause for noncooperation or request further clarification, he or she shall be given a further written notice (PA-47) describing the circumstances and evidence necessary for a finding of good cause.

1. Acknowledgement of notice: The client and the IM worker shall both acknowledge that the client received the notice(s) by signing and dating two copies of Form PA-46 (and PA-47). One copy of each notice will be given to the client and one placed in the case record.

(c) Cooperation requirements: Each applicant/recipient is required to cooperate with the CWA/CSP Unit, probation department, county prosecutor's office and other child support agencies in the following:

1. Assisting in identifying and locating the parent of each child for whom aid is requested;

2. Assisting in the establishment of paternity of each child born out-of-wedlock for whom aid is requested;

3. Assisting in obtaining support payments for each individual for whom aid is requested; and

4. Assisting in obtaining any other payments or property due any individual for whom aid is requested.

(d) Cooperation explained: The term "cooperation" includes the following actions by the client:

1. Appearing at the offices of the appropriate child support agencies as necessary to provide oral or written information, or documentary evidence relevant to obtaining support, which is known to, possessed by or reasonably obtainable by the client;

2. Appearing as a witness at court or other hearings or proceedings necessary to obtain support;

3. Providing information, or attesting to the lack of information, under penalty of perjury; and

4. After receipt of a grant, paying to the CWA any child support payments which are received directly from either the absent parent or through the probation department.

(e) Good cause for refusal to cooperate: A client who claims to have good cause for refusal to cooperate has the burden of establishing the existence of a good cause circumstance.

1. Client requirements: To establish good cause, the client will be required to:

i. Specify the circumstances which he or she believes provide sufficient good cause for noncooperation;

ii. Corroborate the good cause circumstance; and

iii. If requested, provide sufficient information (such as name and address, if known, of putative father or absent parent) to permit an investigation.

2. Good cause circumstances: Only when one of the following circumstances exists will the CWA determine that the client's cooperation is against the best interests of the child and there is good cause for refusal to cooperate:

i. The client's cooperation is reasonably anticipated to result in physical or emotional harm to the child for whom support is to be sought;

ii. The client's cooperation is reasonably anticipated to result in physical or emotional harm to the parent or parent-person of such nature or degree that it *[reduce]* ***reduces*** such person's capacity to care adequately for the child; or

iii. Proceeding to establish paternity or collect support in the particular case would be detrimental to the child because:

(1) The child was conceived as a result of incest or forcible rape;

(2) Legal proceedings for the adoption of the child are pending before a court of competent jurisdiction; or

(3) The client is currently (for a period of not more than three months) being assisted by a public or licensed private social agency to decide whether to keep the child or relinquish him or her for adoption.

3. Physical and emotional harm: Physical and emotional harm must be of a serious nature in order to justify a finding of good cause. A finding *[for]* ***of*** good cause for emotional harm may only be based upon a demonstration of an emotional impairment which substantially affects the individual's functioning.

i. Anticipated emotional harm: When the good cause determination is based in whole or in part upon anticipated emotional harm to the child, parent or parent-person, the CWA will consider the following:

(1) The present emotional state and the emotional health history of the individual;

(2) The intensity and probable duration of the emotional impairment;

(3) The degree of cooperation to be required; and

(4) The extent to which the child will be involved in the paternity establishment or support collection activity.

(f) Proof of good cause claim: The applicant/recipient who claims good cause must provide corroborative evidence within 20 days from the day the claim was made. In exceptional situations, the CWA may allow a reasonable additional period of time if it determines the client requires additional time because of the difficulty of obtaining the evidence.

1. Corroborative evidence: The CWA will make a good cause determination within 45 days of the date of the claim by the client, based on the corroborative evidence supplied by the client, but only after it has examined the evidence and finds that it actually verifies the good cause claim. The CWA will make an entry in the case record regarding the decision and

You're viewing an archived copy from the New Jersey State Library.

will document the basis of its decision. The claim may be corroborated by the following types of evidence:

i. Birth certificates or medical or law enforcement records which indicate that the child was conceived as the result of incest or forcible rape;

ii. Court documents or other records which indicate that legal proceedings for adoption are pending before a court of competent jurisdiction;

iii. Court, medical, criminal, child protective services, social services, psychological or law enforcement records which indicate that the putative father or absent parent might inflict physical or emotional harm on the child, parent, or parent-person;

iv. Medical records which indicate emotional health history and present emotional health status of the child for whom support would be sought; or, written statements from a mental health professional indicating a diagnosis or prognosis concerning the emotional health of the parent, parent-person or the child for whom support would be sought;

v. A written statement from a public or licensed private social agency that the applicant/recipient is being assisted by the agency to resolve the issue of whether to keep the child or relinquish him or her for adoption; and

vi. Sworn statements from individuals other than the applicant/recipient with knowledge of the circumstances which provide the basis for the good cause claim.

2. Additional information: If, after examining the corroborative evidence, the CWA finds additional information is necessary in order to make a good cause determination, it will promptly notify the client, specifying the type of document which is needed.

i. Upon request by the client, the CWA will make a reasonable effort to obtain specific documents the client is not reasonably able to obtain without assistance.

3. Corroborative evidence not submitted or inadequate:

i. Claim based on client's anticipation of physical harm: The CWA will evaluate the good cause claim when the agency believes the claim is credible without corroborative evidence and such evidence is not available. A decision will be made based on the client's statement and the results of the investigation. This determination will be reviewed, approved or disapproved by supervisory personnel and the findings recorded in the case record.

ii. Corroborative evidence insufficient for determination: The CWA may further verify the good cause claim and, where necessary for a final determination, conduct an investigation. The investigation will include contact of the absent parent or putative father. Prior to such contact, however, the client will be notified so that he or she may:

(1) Present additional corroborative evidence to make the contact unnecessary;

(2) Withdraw the application for assistance or have the case closed; or

(3) Have the good cause claim denied.

(g) Granting or continuation of assistance: If the client has complied with the requirements of (f) above for providing corroborative evidence, assistance shall not be denied, delayed or discontinued pending the determination of whether or not good cause for refusal to cooperate exists.

1. Periodic review: Determinations of good cause which are based on circumstances subject to change such as those discussed in (e)2 above will be reviewed not less frequently than at each redetermination. If the CWA determines that circumstances have changed and good cause no longer exists, it will rescind its findings and enforce the cooperation requirements delineated in (c) above.

(h) Refusal to cooperate: If the CWA determines that no good cause exists for the client's refusal to cooperate, the client shall be notified of the determination and given an opportunity to cooperate, withdraw the application for assistance, or have the case closed. The client shall also be advised of his or her rights to a fair hearing to appeal this adverse decision in accordance with N.J.A.C. 10:81-7.1(c).

1. In the event of continued refusal to cooperate, the parent or parent-person will be denied eligibility without regard to other eligibility factors (see N.J.A.C. 10:82-2.4). Any aid for which the child is eligible shall then be provided in the form of protective payments (see N.J.A.C. 10:81-4.9). The noncooperating parent or parent-person may not be named as the protective payee. The appointment of a protective payee may be appealed in accordance with provisions of N.J.A.C. 10:81-4.14.

2. If the CSP Unit determines that the client has refused to cooperate and has not claimed good cause for that refusal, his or her needs will be deleted from the assistance grant.

i. In the event the custodial parent is initially uncooperative and later becomes cooperative, the needs of the custodial parent will be deleted retroactively for the actual period of noncooperation.

ii. In the event the custodial parent refuses to cooperate but the CSP Unit is successful in its efforts, the needs of the custodial parent will be deleted retroactively for the period during which the refusal to cooperate frustrated the CSP Unit's efforts.

3. Maintenance of CSP effort: The deletion of the AFDC parent or parent-person from the eligible unit shall not be construed as a bar to continuing effort by the CSP Unit to establish paternity or obtain support for the AFDC children.

(i) CSP interaction:

1. Review of CSP Unit: Prior to a final determination of good cause for refusing to cooperate, the Income Maintenance Unit will provide the CSP Unit an opportunity to review and comment on the findings and will consider recommendations from that unit. Additionally, the CSP Unit may participate in any fair hearing resulting from a good cause determination.

2. Notice to CSP Unit: If the CSP referral form has already been routed to the CSP Unit, the IM worker shall promptly notify the CSP Unit that good cause has been claimed. The worker shall also report promptly to the CSP Unit as soon as a determination in the good cause claim has been made and shall advise whether or not child support enforcement may proceed without the participation of the parent or parent-person (see (j) below).

(j) Enforcement without parent's cooperation: When the CWA makes a determination that good cause for refusal to cooperate exists, it will also determine whether or not child support enforcement and/or establishment of paternity can proceed without risk of harm to the child or parent with whom he or she lives if the enforcement or collection activities do not involve their participation. This decision, with the basis for the determination, will be recorded in the case record.

1. CSP recommendation: The CSP Unit will be given the opportunity to review the proposed determination and will be notified promptly regarding the decision.

2. Notification of client: The client will be notified that child support enforcement or establishment of paternity will

You're viewing an archived copy from the New Jersey State Library.

proceed without the client's cooperation. The client may choose to withdraw his or her application or have the case closed. The client must also be advised of his or her rights to appeal this decision in accordance with N.J.A.C. 10:81-7.1(c).

(k) Record keeping: The CWA shall maintain records of activities relative to good cause claims and shall make them available for Federal or State review upon request. Form PA-48, Summary of Good Cause Claims, shall be used for maintaining records of activities connected with good cause claims. Form PA-48A, Report on Claims of Good Cause for Refusing to Cooperate in Establishing Paternity and Securing Child Support, shall be prepared semi-annually. It shall cover the October-March and April-September report periods and must be sent to the Division by April 15 and October 15, respectively.

10:81-11.6 Incentive payment

(a) Twelve percent incentive: An amount equal to 12 percent of all support collections shall be retained by the CWA with the exception of those collections made on behalf of or in conjunction with other jurisdictions (intrastate or interstate).

1. Support collection defined for the purpose of calculating the 12 percent incentive shall include court ordered child support, court ordered alimony or spousal support collected in conjunction with child support and voluntary support payments.

2. Incentive payments for collections on behalf of other jurisdictions will be forwarded by that jurisdiction to the appropriate agency. Accordingly, CWAs are to pay 12 percent incentives to other CWAs within the State and calculate incentive owed to appropriate out-of-state jurisdictions for child support collections received from those jurisdictions, for payment via the State IV-D Agency.

3. Incentive payments will be divided evenly between jurisdictions when more than one jurisdiction within the State is involved in the enforcement or collection of any child support obligations. Incentives on collections processed through the State CSP Unit will be divided evenly between the State and local jurisdiction.

(b) Deduction of the incentive payments: The CWA will be responsible for the calculation of incentive payments. Any such payment shall be deducted from the Federal share of the amount of support collected. All incentive monies retained by the CWA will be deposited in the administration account.

10:81-11.7 Child support collection and establishment of paternity under Title IV-D

(a) State agency responsibilities: The State Bureau of Child Support and Paternity Programs, located in the Division of Public Welfare, shall be the single organizational unit responsible for the supervision of the administration of the Child Support and Paternity Program. This unit shall be referred to as the Bureau of CSP Programs.

1. Responsibilities of the Bureau of CSP Programs include but are not limited to the following:

i. The coordination of activities involving CWA/CSP Units, the county probation departments, county prosecutor's offices, the county adjuster's offices (for URESA activity), the county sheriff's offices, the State Attorney General's Office, and the Administrative Office of the Courts;

ii. The operation of the State Parent Locator Service (SPLS) and the coordination of the local parent location efforts;

iii. The transmittal of regulatory and procedural information to the CWA/CSP Units;

iv. The supervision of the Child Support and Paternity Program including monitoring activities;

v. Application to the U.S. Department of Health and Human Services for use of Federal courts with regard to the collection of child support;

vi. The initiation of collection action through the U.S. Secretary of the Treasury;

vii. Provision of technical aid to county agencies encountering problems;

viii. The coordination of activities involving collection of past due child support through Federal/State tax refunds.

10:81-11.8 Responsibilities of the CWA

(a) Each CWA shall maintain a Child Support and Paternity (CSP) Unit.

(b) Staffing requirements: The CWA shall allocate and/or hire staff for the CSP Unit in quantity sufficient to effectively and efficiently carry out the provisions of N.J.A.C. 10:81-11.9 and parent locator functions outlined in N.J.A.C. 10:81-11.13 through 14. No CSP functions may be performed by staff that also performs income maintenance or social service functions. The CWA must maintain a separate line of authority for CSP staff. Exceptions may be granted to the staff separation requirement if it can be documented that such separation is not administratively feasible in sparsely populated counties. Approval for such exception must be granted by the Director of the Division of Public Welfare and the U.S. Department of Health and Human Services.

10:81-11.9 Responsibilities of the CWA/CSP Unit

(a) This unit shall be responsible for taking appropriate action to locate absent parents, to establish paternity and/or secure child support due AFDC recipients; for referral of cases, when the whereabouts of the absent parent is unknown, to the State Parent Locator Service; and for providing services for location, filiation and obtaining support for non-public assistance persons.

(b) Notification to remit support payments to the CWA-Form CSP-157, Case Information Exchange Notice:

1. Purpose: All support rights due AFDC-C recipients are assigned to the CWA and paid through the appropriate county probation department. Form CSP-157, Case Information Exchange Notice, shall be used to facilitate notification to the county probation department.

2. Completion and routing of Form CSP-157: Form CSP-157 must be completed in duplicate by the CSP Unit for any case in which a court order for child support exists and the beneficiary listed is someone other than the CWA. The original of this form shall be immediately forwarded to the appropriate probation department responsible for collection of the support order and the copy placed in the CSP Unit's case file.

3. Appropriate probation department defined: The appropriate probation department shall be defined as the probation department which is currently collecting support payments for the AFDC recipient pursuant to a court order or in direct pay cases the probation department in the county in which the absent parent resides.

4. Return receipt of Form CSP-157 from the probation department: Upon return receipt of Form CSP-157 from the county probation department, the CWA/Fiscal Unit shall be notified to initiate an account.

(c) Investigative interview: In cases where a court order does not exist and sufficient current information is not already available, the CSP Unit shall arrange for an interview with the AFDC recipient no later than 10 working days after receipt of the referral document.

You're viewing an archived copy from the New Jersey State Library.

1. Purpose of interview: The purpose of the interview shall be to obtain any information which may be necessary to assist the CSP Unit in the establishment of paternity and/or support and/or in its search for an absent parent (see N.J.A.C. 10:81-11.13 through 14). Such information shall be recorded in the case record (see (e)5 below).

2. Action resulting from the interview:

i. If the information provided by the AFDC recipient is sufficient to warrant legal action, such action shall be taken in accordance with (d) below.

ii. If the AFDC recipient refuses to cooperate (see N.J.A.C. 10:81-11.5), the CSP Unit shall immediately contact the IM worker and such recipient's needs shall be deleted from the grant, subject to the requirements of adverse notice (see N.J.A.C. 10:81-7.1(k)).

iii. If the probation department refers an AFDC parent or parent-person to the CSP Unit for refusal to cooperate (see N.J.A.C. 10:81-11.5), the CSP Unit shall conduct an interview with such client to ascertain if there exists actual refusal to cooperate, the CSP Unit shall proceed in accordance with (c)2ii above. If it is determined that such person has cooperated, any pertinent information shall be forwarded to the probation department.

(d) Legal action taken by the CSP Unit: If the CSP Unit collects information sufficient to locate the absent parent, legal proceedings shall be initiated for the purpose of establishing paternity and/or obtaining support.

1. Consent process: For all cases in which sufficient information is available to initiate proceeding*s* for the purpose of establishing paternity and/or obtaining support, a consent order will be attempted in accordance with individual county procedures.

i. Purpose: The consent process is to facilitate time efficient and cost effective methods to establish paternity and/or support orders.

ii. Definition: The consent process is a conference between the plaintiff and the defendant before a hearing officer, to agree to a specific amount of child support based on an approved support formula, to be paid through the appropriate probation department.

iii. Results: If paternity is acknowledged and/or support is agreed upon, an order is established and forwarded to the appropriate court for review and approval by the judge.

2. Filiation proceedings: With regard to cases in which paternity has not been acknowledged, the CSP Unit shall file a complaint to establish paternity in a court of competent jurisdiction.

i. Blood test scheduling: If paternity is denied and the court orders blood tests, the CWA/CSP Unit shall schedule the test at the appropriate facility.

ii. Payment for blood test: The CWA/CSP Unit shall have the court stipulate that the defendant is responsible for payment of the blood test. The only exceptions would be for the following reasons:

(1) The court specifies that the defendant is not financially responsible, if he is excluded.

(2) The defendant has been declared indigent by the court.

(A) Note: Defendant can be held liable for the cost in cases where he is found indigent, for possible future payment.

iii. Legal proceedings waived: Filiation proceedings may be waived in any case involving incest or forcible rape, or in any case in which legal proceedings for adoption are pending, if, in the judgment of the CWA, it would not be in the best interest of the child to establish paternity.

iv. Order of filiation: If the court finds that the person charged is the father, an order of filiation is made which also specifies the support to be paid by the father for the maintenance of the child.

v. Refusal or inability to identify father: In cases where the mother refuses, or claims inability, to reveal the identity of the reputed father, a complaint may be filed naming the defendant as follows:

(1) "John Doe, reputed father of (name of child) said name John Doe being fictitious". Such a complaint must be accompanied by the affidavit of inquiry made by the CWA director or duly authorized representative, stating the mother's refusal or inability to identify the reputed father and that other diligent inquiry has failed to reveal the identity. The court may then hold an examination of the mother who withheld disclosure of the name of the reputed father. If she refuses to cooperate, the court may hold her in contempt.

(A) Normally after such a complaint is filed and an examination held as required for disclosure or identity of the reputed father, a warrant will be issued against the reputed father so that when he is personally served, he may be subject to the jurisdiction of the court. This is followed by a hearing where testimony is given by the parties, on the basis of which the court decides the issue of paternity.

vi. Order of filiation denied: If a court of competent jurisdiction denies an order of filiation against an individual, the CSP Unit shall take no further action with regard to that alleged absent parent, except for appeal of the decision of the court, if warranted.

3. Support proceedings: In cases where paternity has been legally established through marriage and an agreement cannot be reached at the consent conference, a nonsupport complaint shall be filed in a court of competent jurisdiction.

4. Filing of complaint: The applicant/recipient is not required, as a condition of eligibility for assistance, to sign a complaint to establish paternity or obtain support. Such complaints shall be filed in the name of the CWA by the director or his or her authorized representative. Whenever possible, the complaints should be filed in the name of both the CWA and the client to ensure continuation of the court action should the client's assistance be terminated.

5. Treatment of cases in which the absent parent resides out-of-state: In cases where the absent parent resides out-of-state, proceedings to establish paternity and/or secure child support shall be in accordance with the Uniform Reciprocal Enforcement of Support Act (1968)(URESA). The CWA shall file a URESA nonsupport complaint in accordance with individual county procedure (see (d)4 above).

6. Treatment of cases in which the absent parent is incapacitated: In cases where it has been verified that the absent parent is permanently disabled, the case shall be processed in the routine manner for obtaining or enforcing a court order, thus ensuring periodic financial evaluation.

7. Treatment of cases in which bankruptcy has been declared: The discharge of any child support obligation in bankruptcy proceedings conducted under Title II of the U.S. Code is prohibited. Therefore, cases in this category shall be brought to the attention of the county probation department for appropriate action.

8. Treatment of cases in which the absent parent is incarcerated and involved in a work release program: If the absent parent is incarcerated in a prison that has a work release program, the CWA shall notify the work release coordinator that the prisoner is liable for child support.

You're viewing an archived copy from the New Jersey State Library.

9. Treatment of case in which the absent parent is deceased: In cases where the absent parent is deceased, verification of death must be obtained and a copy of the death certificate placed in the IV-D file. The case shall be designated as a closed IV-D case for statistical purposes.

10. Treatment of a case in which the absent parent is in the military: In cases where the absent parent is serving in the military, formal legal proceedings should be initiated (see (d)1 through 5 above).

i. If the absent parent is temporarily stationed out of the country and New Jersey does not have reciprocity with the particular country, the absent parent's commanding officer shall be contacted to obtain a voluntary admission of paternity and/or a military allotment for child support.

ii. In cases where the absent parent is serving in the military and there is a valid court order under the jurisdiction of a probation department within the State, a request for an allotment shall be made through the appropriate probation department, provided the absent parent has failed to make payments equal to the support payable for two months or longer.

(e) Documentation by the CSP Unit-Form CSP-158, Case Preparation Information Sheet:

1. Purpose: The Case Preparation Information Sheet, Form CSP-158, shall be used to record all identifying information concerning the client, *[that]* **the** absent parent and the children of the absent parent, and as a referral to the Intake Unit for initiation of legal action.

2. Completion of Form CSP-158: A Form CSP-158, Case Preparation Information Sheet, shall be completed in duplicate for each absent parent.

3. Routing of Form CSP-158: In cases where there is a valid address for the absent parent, the original of form CSP-158 shall be forwarded to the appropriate agency for initiation of legal action. A copy shall be retained in the CSP case file.

4. Return receipt of Form CSP-158: Upon return receipt of CSP-158, a copy shall be forwarded to the CWA/Fiscal Unit to initiate an account if appropriate. The disposition of the case shall be noted in the CSP case file.

5. CSP case record: Separate CSP case records shall be maintained for all AFDC cases referred to the CSP Unit. This regulation does not necessarily require a separate case folder but at a minimum, income maintenance records and CSP records must be physically segregated within the containing binder.

i. Purpose of CSP case record: The purpose of the CSP case record is to compile, in one easily accessible location, all information relevant to CSP activities.

ii. The CSP case record shall contain the following information as applicable to each case:

(1) The referral from income maintenance to the CSP Unit for each AFDC applicant/recipient or an application for those individuals requesting nonpublic assistance (NPA) services.

(2) A copy of the Case Preparation Information Sheet, Form CSP-158.

(3) A record of any contact with the AFDC applicant/recipient or NPA individual. The date and reason for contact, and the result thereof shall also be documented.

(4) A record of any contacts with the absent parent, the date and reason therefore, and the results of such contacts.

(5) A record of efforts to utilize local locate sources, including dates and results of these efforts.

(6) A record of referral to the State PLS, including the dates and results of such referral.

(7) A record identifying the court order.

(8) A record of communications to and from the Bureau of CSP Programs or any other CSP agency.

(9) A record of communications to and from income maintenance staff concerning the case.

(10) A record of deletions, terminations, suspensions or transfer of case/individual, the date and the reason for such action.

iii. Legal proceedings waived: If legal proceedings are waived in accordance with (d)2iii above, that fact shall be noted in the CSP case record and no further action shall be taken by the CSP Unit.

(f) Application for IRS collection: Application for full collection by the IRS may be made only in those cases which involve a delinquent amount of a child support obligation under the order of a court of competent jurisdiction. Applicants/recipients of AFDC may be eligible for this service under Section 402(a)26 of the Social Security Act and 45 CFR 232.11 since the application for assistance assigns support rights to the State. Under Section 454(6) of the Social Security Act, non-AFDC families may also be eligible for this service when a signed "Application for IV-D Services" is obtained from the client.

1. Minimum amounts for IRS collection: Application for collections by IRS may be made only when the delinquent amount owed exceeds $750.00.

2. Fee chargeable to CWA: The CWA in the county in which the application was initiated (whether for AFDC or non-AFDC case) will be billed a collection fee of $122.50 for each application certified by DHHS.

3. Frequency of application: No application for certification can be made within six months of a previous application in the same case except to correct an error or to make an adjustment to a prior application.

4. Approval or disapproval of application: If the Bureau of CSP Programs approves the application, it will then be submitted to the DHHS Regional Office of Child Support Enforcement, which will approve or disapprove the application. The CWA or county probation department (CPD) will be notified, in writing, by the Bureau of CSP Programs with regard to approval or rejection of the application.

5. Diligent effort to collect delinquent child support: The local CWA/CPD IV-D Unit must first make diligent and reasonable efforts to collect the delinquent amounts utilizing the State collection mechanisms. These efforts should include, among others, appropriate steps to locate the delinquent support obligor, to ascertain that person's current or last known employer, and to locate and levy against that person's assets.

6. Form CSP-109, Application for IRS Collection: Application for such services is made via Form CSP-109, Application for IRS Collection of Child Support. Applications may be submitted by the director of the CWA or his or her designee, or the chief probation officer or his or her designee. Certification and authorization of pertinent court order information and arrearage amounts must also be signed by the chief probation officer or any individual so designated by the chief. The application shall be submitted to the Bureau of CSP Programs and a copy retained in the case record.

(g) Access to IRS data for child support enforcement: Upon written request, the IRS is authorized to disclose individual income tax return information to state and local child support enforcement agencies. The State CSP Unit has been designated the single State unit responsible for requesting information and ensuring adequate safeguards against wrongful disclosure in accordance with Federal requirements. Records that may be accessed include master file information and tax return information.

You're viewing an archived copy from the New Jersey State Library.

1. Master file information: This information includes filing status, dollar amounts, nature of income, and the number of dependents. The State will record this information and then forward it to the requesting county.

2. Tax return information: This information includes gross income, names and addresses of payers of income, and names of dependent(s) claimed. The IRS will supply this information only if it is not reasonably available from any other source. The State will attempt to verify this information through third party sources. Only third party verification will be forwarded to the requesting CSP Unit.

3. Fee chargeable to CWA: The fee to the CWA for master file information is $.20 per name search and $2.65 per name for tax return information. The CWA will be billed at the end of each report quarter for the number of requests received by the State Child Support Unit. These expenses are reimbursable at the 70 percent Federal matching rate.

4. Restrictions against use of IRS data: Tax information disclosed to child support enforcement agencies shall not be used in litigation and shall not be divulged to third parties.

5. Security requirements: The Federal Government has issued the following security requirements for IRS tax information.

i. Minimum security required will be that of a locked container stored in a room that is locked when not in use and located in a building that is either locked or under security guard protection when not occupied. No more than two authorized personnel are permitted to have keys or the lock combination of the container. Only authorized personnel may be allowed access to the tax information on a "need-to-know" basis.

ii. An access list of persons authorized to process and request IRS data must be submitted to the New Jersey Bureau of Child Support and Paternity Programs (State CSP Bureau) before any information can be released. Access to areas where IRS information is stored or processed must be controlled to the degree that unauthorized personnel, to include janitorial staff, must be escorted there by an authorized individual during non-working hours. Locks or combination to the security container must be changed yearly or upon departure or reassignment of authorized personnel. When written material containing IRS data is no longer needed, it must be returned to the State CSP Bureau. No information provided by IRS may be copied in any manner. Records must be maintained as to the disposition of such material. Periodic inspections of State and local facilities by the IRS will be conducted to ensure that security precautions and confidentiality requirements are being met.

6. Unauthorized disclosure of information: It shall be unlawful for any officer, employee or agent, or former officer, employee or agent of any state or any local child support enforcement agency to disclose to any person, except as authorized in this title, any return or return information acquired by him or another person. Any violation of this paragraph shall be a felony punishable by a fine in any amount not exceeding $5,000, or imprisonment of not more than five years, or both, together with the costs of prosecution.

7. IRS data request procedures: A request for IRS data is accomplished by submission of CSP Form-122, Request for IRS Master File Information, or CSP Form-123, Request for IRS Return Information.

i. Completion of Form CSP-122: Form CSP-122 shall be completed in duplicate and shall include the name(s) and title(s) of the designated official(s) authorized to maintain IRS master file data, the name(s) and title(s) of agency personnel authorized access to IRS information, a signature of the agency's director or designated representative, and the name, Social Security number, and welfare case number (WC#) (or probation case number) for each case requested.

ii. Completion of Form CSP-123: Form CSP-123 shall be completed in duplicate and shall include the name(s) and title(s) of the designated official(s) authorized to maintain IRS return information, the name(s) and title(s) of agency personnel authorized access to IRS information, the signature of the agency's director or designated representative, the taxpayer's name, welfare case number (WC#) (or probation case number), address, SSN, and tax period requested. In addition, a statement shall be included outlining the need for this request.

iii. Routing of Form CSP-122 and Form CSP-123: Forms CSP-122 and CSP-123 shall be submitted in duplicate to the State CSP Unit.

8. Documentation by CWA/CPD: The CWA/CSP Unit or CPD IV-D staff shall maintain individual records noting the dates when the information was received, who received the information, who had access to the information, and the date the information was returned to State.

(h) Collection of delinquent child support payments through offset of Federal income tax: Federal income tax refunds shall be offset when court ordered child support payments owed to county welfare agencies are delinquent.

1. Eligible cases: Court ordered child support payment*s* must be at least three months in arrears and the delinquency must total at least $150.00 to be eligible for Federal Tax Refund Offset.

2. CWA responsibilities: CWA/CSP Unit shall be responsible for submitting cases to the IRS Offset process where child support or a judgment has been ordered payable directly to the CWA by a court of competent jurisdiction via Form CSP-152, Tax Refund Offset Data Form. The CPDs will be responsible for submittal of those public assistance cases under their supervision which meet the eligibility requirements.

i. Completion of Form CSP-152, Tax Refund Offset Data Form: Form CSP-152 must be completed for each absent parent to be submitted for IRS Offset in accordance with instructions listed on the form. It should be noted that if the absent parent is under multiple court orders, only one Form CSP-152 should be completed.

ii. Completion of Form CSP-151, Batch Transmittal Tax Refund Offset Form: A CSP-151 form will be completed to transmit a batch of CSP-152 forms. Batches will include up to 25 cases. Each CSP-151 form must include a batch control number. The batch control number must be three digits and is to be prefaced with the submitting county's local code as outlined on Form CSP-152. Batches should be numbered consecutively (for example Atlantic: 001-001, 001-002, 001-003).

iii. Routing of Form CSP-152 and Form CSP-151: Forms CSP-151 and CSP-152 are to be forwarded to the State CSP Unit.

3. Automated submittal of cases for IRS Offset: Those county probation departments that are automated may submit cases for IRS Offset via magnetic tape. Specifications for magnetic tape layout will be issued annually.

4. Submittal date: The State CSP Unit must submit all requests for collection annually by October 1 of each tax year to the Office of Child Support Enforcement (OCSE).

5. Notification procedure for cases potentially eligible for offset: All taxpayers submitted for offset against their Federal income tax refund due to child support arrearages will receive notification of the offset prior to the end of the current tax year.

You're viewing an archived copy from the New Jersey State Library.

6. Inquiries or appeals pertaining to the offset: Taxpayers will be notified that any inquiries or appeals regarding the offset of their Federal income tax refund should be directed to the State CSP Unit.

7. Update of cases submitted for offset: Necessary updates (deletions or corrections) of cases submitted for offset, will be submitted via Form CSP-152 to the State CSP Unit. All updates must be received by OCSE prior to December 15 of the current tax year.

i. Completion of Form CSP-152; Deletions: If the original arrearages figure submitted for offset has been paid in full, the original amount of arrearage will be placed in "amount owed" (blocks 68 through 75) on Form CSP-152 and a "D" will be placed in the "Action Code" (block 80). A deletion may be submitted immediately provided the arrears have decreased to 49 dollars or less.

ii. Completion of Form CSP-151; Deletions: Deletion forms should be batched in the same manner as initial submittals (see (h)2ii above). These batches should contain only deletions and the batch transmittal must be identified as containing only deletions by printing a large "D" above the batch information area.

iii. Completion of Form CSP-152; Corrections: If the arrears have been reduced since the original submittal of the case, the new arrearage figure will be placed in "Amount Owed" (blocks 68-75) of Form CSP-152 and a "C" will be placed in the "Action Code" (block 80).

iv. Completion of Form CSP-151; Corrections: Correction forms should be batched the same number as original submittals (see (h)2ii above). These batches should contain only corrections and the batch transmittal must be identified as containing corrections by printing a large "C" above the batch information area. Multiple corrections should be tracked to ensure submittal of the most current information possible.

(1) Note: Batches should be numbered sequentially in order of submittal regardless of the type of batch.

v. Routing of Forms CSP-151 and CSP-152 for update: Forms CSP-151 and CSP-152 are to be routed in the same manner as original submittals (see (h)2iii above).

vi. Automated submittal of deletions and corrections for IRS offset: Those counties that are automated and have submitted original request for offset via magnetic tape, will submit request for deletion or correction via magnetic tape in accordance with annual instructions for tape layout.

8. Joint returns for cases submitted for Federal IRS tax refund: In situations where a taxpayer and his employed spouse have filed a joint return and the spouse is not responsible for the child support debt, the involved parties should be referred to their nearest IRS Service *[office]* ***Office*** to complete a 1040X Form for a prorated refund. The parties should bring a copy of their completed tax return and copies of all W-2 forms.

9. Interstate notification: In interstate cases, only the state that has been assigned the support rights may request offset of IRS refunds. The submitting state must inform the reciprocating state of the submittal and advise that state when a collection is received so that accurate accounts can be maintained.

(i) Collection of delinquent child support payments through the New Jersey State Income Tax/Homestead Rebate (SOIL) Project: Delinquent child support payments owed to the county welfare agency may be offset through the New Jersey State Income Tax/Homestead Rebate (SOIL) Project.

1. Eligible cases: Cases with a minimum arrearage of $25.00 may be submitted for offset under this program.

i. Note: Cases submitted under the Federal IRS Offset Project should not be submitted under this program. Cases submitted for the Federal Offset Project will automatically be forwarded for offset under the SOIL Project.

2. Submittal of eligible cases: CWA/CSP Unit shall be responsible for submitting cases to the SOIL Project where child support or a judgment has been ordered payable directly to the CWA by a court of competent jurisdiction. The CPDs shall be responsible for submittal of those public assistance cases under their supervision which meet the eligibility requirements. Cases will be submitted via Form CSP-152.

i. Completion of form CSP-152, Tax Refund Data Form: form CSP-152 shall be completed in the same manner used when submitting for the Federal Tax Refund Offset (see (h)2i above).

ii. Completion of Form CSP-151, Batch Transmittal Tax Refund Offset Form: Form CSP-151 shall be completed in the same manner used when submitting for the Federal Income Tax Refund Offset (see (h)2ii above). Each batch should contain only cases submitted for the SOIL Project and must be indicated as such by printing a large "S" above the batch information area on the batch transmittal form.

(1) Note: Batches should be numbered sequentially, in order of submittal, regardless of the type of batch.

iii. Routing Forms CSP-151 and CSP-152: *[forms]* ***Forms*** CSP-151 and CSP-152 shall be routed to the State CSP Unit in the same manner used when submitting for the Federal Income Tax Refund Offset (see (h)2iii above).

3. Automated submittal of cases for collection of delinquent child support payments through the N.J. State Income Tax/Homestead Rebate (SOIL) Project: Counties that are automated may submit cases for State Income Tax/Homestead Rebate Offset via magnetic tape in accordance with specifications issued annually.

4. Submittal date: The State CSP Unit must submit all requests for collection of delinquent child support through the N.J. State Income Tax/Homestead Rebate (SOIL) Project annually by January 1.

5. Additions for collections of child support payments through Homestead Rebate: The State CSP Unit must submit all additional requests for Homestead Rebate Offset annually by June 1.

6. Notification procedure for cases potentially eligible for offset of State Income Tax/Homestead Rebate: All taxpayers submitted for offset against their State Income Tax/Homestead Rebate due to child support arrearages will receive notification of the offset from the Division of Taxation.

7. Inquiries or appeals pertaining to the offset: Taxpayers will be notified that any inquiries or appeals regarding the offset of their State Income Tax/Homestead Rebate should be directed to the State CSP Unit. Taxpayers will have 35 days from the date of the notice to appeal the offset.

8. Update of cases submitted for offset, State Income Tax Refund/Homestead Rebate: Necessary updates (deletions or corrections) will be processed in the same manner as cases submitted for Federal Income Tax Refund Offset (see (h)7 above).

i. Note: Cases submitted should be identified as Offset of State Income Tax Refunds/Homestead Rebate by printing a large "S", in addition to the "D" for deletions or "C" for correction***s***, on the CSP-151, Batch Transmittal Tax Refund Offset Form.

9. Joint returns for cases submitted for State Income Tax Refund/Homestead Rebate: In situations where the debtor and his employed spouse may have filed a joint return and the spouse is not responsible for this child support debt, a written

You're viewing an archived copy from the New Jersey State Library.

request for an appeal must be forwarded to the state CSP Unit and must include taxpayer's name, spouse's name, and both Social Security numbers. This appeal will be referred to the Division of Taxation for appropriate action.

(j) Title IV-D services available to non-public assistance persons: Appropriate child support services are to be made available to non-public assistance persons upon application filed by such individual with the IV-D Agency. These services shall include locating absent parents, establishing paternity and securing support.

1. Form CSP-111, Application for *[Non Public]* ***Non-Public*** Assistance Child Support and Paternity Services: Non-public assistance individuals requesting services from the CWA shall apply for such services by signing Form CSP-111. This form shall be executed in duplicate.

i. Purpose: In order for the CWA/CPD to obtain FFP for non-public assistance child support and collection activities, an individual must sign an application for such services.

ii. Routing of Form CSP-111: This form must be executed in duplicate. The original shall be filed in the NPA applicant's case record and the duplicate given to the client at the time of application.

2. Parent Location Services: NPA persons are entitled to receipt of PLS services to the same extent and for the same purposes as public assistance persons.

i. No active intrastate order: If no active intrastate order exists, the parent locator service shall be utilized by the county welfare agency to locate the absent parent for the purpose of obtaining child support (see N.J.A.C. 10:81-11.14).

ii. Active intrastate support order: If an active intrastate order exists, the county probation department charged with enforcement of the order will be responsible for providing parent locator service to the non-public assistance person.

3. Establishing paternity: Non-public assistance persons are entitled to receipt of services regarding the establishment of paternity to the same extent as public assistance persons.

4. Obtaining an order: Non-public assistance persons seeking support payments shall be referred to the county intake unit responsible for initiating consent conference.

5. Documentation of action taken by CSP Unit: All action taken by the CSP Unit on behalf of a non-public assistance person shall be documented in a CSP case file in accordance with (e) above.

10:81-11.10 Fiscal record maintenance

The CWA shall be responsible for the maintenance of records involving receipt of child support payments. Procedures contained in Chapter IV of the Accounting Manual shall be followed.

10:81-11.11 Good cause determination

(a) The CSP Unit shall not undertake *[the]* ***to*** establish paternity or secure child support when the unit has received notice from the income maintenance unit that there has been a finding of good cause for noncooperation (N.J.A.C. 10:81-11.5), except as noted in N.J.A.C. 10:81-11.5(j)2.

1. Activities suspended: Upon receipt of notice from the IM Unit that an applicant/recipient has claimed good cause (see N.J.A.C. 10:81-11.5(i)2), the CSP Unit will, until notified of a final determination, suspend all activity in regard to collection of support and/or establishment of paternity.

2. CSP activity without client participation: When there has been a finding that good cause exists but the IM Unit notifies the CSP Unit that child support enforcement may proceed without participation of the applicant/recipient, the CSP Unit will undertake to establish paternity or secure child support without involvement in any way of the applicant/recipient (see N.J.A.C. 10:81-11.5(j)).

10:81-11.12 Notification of deletions, terminations, suspension or transfer of case/individual

(a) In the case of termination, deletion or transfer, the appropriate probation department shall be notified of such action no later than 10 days after the effective date via Form CSP-157, Case Information Exchange Notice. In the event of a case suspension beyond three months, the appropriate probation department shall likewise be notified.

1. Completion and routing of Form CSP-157, Case Information Exchange Notice: The appropriate section(s) of Form CSP-157 shall be completed in duplicate and the original of this form shall be forwarded to the appropriate probation department responsible for collection of the support order and the copy placed in the CSP Unit's case file (see N.J.A.C. 10:81-11.9(b)[(]3).

2. Return receipt of form CSP-157: Upon return receipt of Form CSP-157 from the probation department a copy shall be forwarded to the CWA/Fiscal Unit, if appropriate, and a copy shall be placed in the CSP case file.

10:81-11.13 Parent Locator Service

(a) The locating of absent parents for the purpose of establishing paternity and enforcing child support obligations is a CWA responsibility. To fulfill this requirement, the CWA shall establish a parent locator service within the CSP Unit to perform parent locator services as described in N.J.A.C. 10:81-11.14.

1. The CSP Unit will conduct parent location activity in all cases for which no court order exists. In cases where a court order does exist, the probation department has responsibility for parent location activities; however, it is recommended that on cases where court ordered support is not being received the CWA notify the probation department of the need for enforcement.

10:81-11.14 CWA Parent Locator responsibilities

(a) Form PA-450A, Parent Locator Request Form: Referrals to the State PLS and Federal PLS for parent location activity are accomplished via Form PA-450A.

1. Completion of Form PA-450A: When the whereabouts of a parent is unknown, the CSP Unit shall complete a PA-450A from information obtained during the investigative interview and ensure that the six critical data elements described in the data entry guide are completed.

2. Routing Form PA-450A: The CSP Unit shall immediately transmit PA-450As to the State PLS. Batches will contain no more than 40 cases. Bundles should contain no more than 20 batches.

3. Updated PA-450As: When additional location information is obtained by the CSP Unit after the original Form PA-450A has been forwarded to the State PLS, an updated Form PA-450A shall be sent.

(b) Local investigation: The CSP Unit shall conduct a concurrent investigation with the State PLS in an effort to locate the absent parent at the county level. The State PLS shall be notified immediately if the absent parent is located after such referral. If the investigation reveals additional location information, such new information shall be forwarded to the State PLS (see (a)3 above).

1. Sources: The following sources are to be used by the CWA/CSP Units during its investigation, as appropriate. All of these sources may not be available in every county. This list of sources is not exclusive.

You're viewing an archived copy from the New Jersey State Library.

i. Gas and electric utilities (regarding disconnections or transfer of services);
ii. Telephone company;
iii. Neighbors and landlords;
iv. Last known employer of absent parent regarding:
(1) Current employment;
(2) Date and reason for termination;
(3) Social Security number;
(4) Address to which last W-2 form was mailed;
v. Friends of absent parent;
vi. Local post office for change of address;
vii. Absent parent's relatives;
viii. Recipient's relatives;
ix. Loan companies;
x. County court house records:
(1) Loan agreements;
(2) Mortgages;
(3) Real property ownership;
xi. Voter registration records;
xii. Local law enforcement agencies; and
xiii. Credit bureaus and credit reporting agencies.
(c) Inter-county cooperation requirement:
1. When an absent parent is believed to be in another county within the State, the CSP Unit shall send a request to such county's CSP Unit for assistance in locating the parent.
2. The CSP Unit must take action (including contact of sources enumerated in (b)1 above) as appropriate in response to direct requests received from other counties within the State when the requesting county has reason to believe that the absent parent may be located in that county.
(d) Absent parent located at client's address: If the absent parent is located and is residing at the same address as the client, an immediate referral from the CSP Unit to the appropriate IM Unit and the Fraud Unit is required. Such referral shall be recorded in the CSP file and shall include the date and reason for the referral.

10:81-11.15 State PLS
(a) The State PLS shall be responsible for absent parent searches at the State agency level, coordination of interstate location activities, and referrals to the Federal PLS.
1. Sources to be utilized by State PLS: The following sources are to be utilized by the State PLS, as appropriate. This list is not exclusive.
i. State Division of Motor Vehicles;
ii. State Division of Unemployment and Disability Insurance;
iii. Records of public assistance agencies;
iv. Parent Locator Services of other states;
v. Federal PLS;
vi. State Department of Treasury; and
vii. *[State Division of Correction and Parole.] ***State Department of Corrections.***
2. Notification of results of State PLS efforts: The State PLS will notify the CSP Unit immediately via Form PA-450A and PA-450B Parent Locator Source Response Form, of information obtained on a case.

10:81-11.16 Disclosure of information
(a) The use or disclosure of information concerning applicants or recipients of child support services is limited to purposes directly connected with the administration of public assistance as it relates to the establishment of paternity and collection of child support.
1. Information concerning this program may be provided in connection with:
i. Administrative requirements of the Child Support and Paternity Program including Parent Locator activities;
ii. The administration of any Federal or federally assisted program which provides assistance, in cash or in kind, or services directly to individuals on the basis of need;
iii. Any investigations, prosecutions, criminal or civil proceedings conducted in connection with the administration of this program.
iv. Probation department activities as they relate to the Child Support and Paternity Program.
2. Nothing in this subchapter is to be construed to be in conflict with the regulations on safeguarding information as stated in N.J.A.C. 10:81-7.30 through 7.35.

10:81-11.17 Retention and destruction of case records
(a) Authorization: Each county welfare agency will retain all material normally kept in the IV-D case folder for the time periods indicated below. At the expiration of such time period the Child Support and Paternity Unit may, at its option destroy records in accordance with the retention period indicated below, continuing to retain those portions as indicated in (b) below. In permanent available archives, the CSP Unit will retain information showing the date and manner of destruction of each "IV-D case folder" destroyed.
1. NOTE: "IV-D case file" can be construed to mean the referral document from the IV-A Unit, and any and all other documents and information relevant to the client and the absent parent(s).
(b) Retention periods:
1. No arrears owed to CWA "Closed Case": In destroying records in which no arrears are owed in the court order, the CSP Unit should provide for the permanent retention of information by which to assure itself in the future of the absence of any claim and the reason(s) therefore. See table below.

CASE FOLDERS	RETENTION PERIOD
i. Absent parent has died during which period a court order for child support existed. ii. Client terminates her assistance grant and no court order for child support existed at any time. iii. Client terminated assistance grant and all arrears owed to the CWA have been satisfied.	Three and one-third (3 ⅓) years after agency action or court action, or all arrears have been satisfied.

You're viewing an archived copy from the New Jersey State Library.

2. Reimbursement owing "Open Cases": In each instance of unresolved "suits and claims" matters, open and unpaid assigned support or unpaid arrearage amounts, retain all records in each case until the question is resolved, then retain accordingly.

CASE FOLDERS	RETENTION PERIOD
i. Client terminates assistance. ii. Client is receiving an assistance grant, order for support exists or efforts are continuing to establish an order for support.	Three and one third (3 ⅓) years after recovery of all arrearage owed to the CWA is satisfied.

(c) Requests for destruction of case records will be in accordance with N.J.A.C. 10:81-7.13(c).

(d) When disposal is authorized records must be destroyed in accordance with N.J.A.C. 10:81-13(d).

(a)

NEW JERSEY COMMISSION FOR THE BLIND AND VISUALLY IMPAIRED

Vending Facility Program Operated by the New Jersey Commission for the Blind and Visually Impaired. Designated as the State Licensing Agency

Adopted Repeal: N.J.A.C. 10:97 and Appendix A
Adopted New Rule: N.J.A.C. 10:97

Proposed: December 5, 1983 at 15 N.J.R. 2020(a).
Adopted: April 1, 1984, by George J. Albanese, Commissioner, Department of Human Services.
Filed: April 2, 1984 as R.1984 d.149, **without technical changes** not requiring additional public notice and comment (see N.J.A.C. 1:30-3.5).

Authority: N.J.S.A. 30:6-15.1 and 15.2, P.L. 74-732, as amended by P.L. 83-565 and P.L. 93-516; 34 CFR, part 395.

Effective Date: April 16, 1984.
Expiration Date pursuant to Executive Order No. 66(1978): April 16, 1989.

Summary of Public of Public Comments and Agency Responses:

A petition for rule making was received from the National Federation of the Blind of New Jersey, Inc. (N.F.B.) prior to the completion of the proposed new rule. The Commission responded to the petition (15 N.J.R. 1669(b)), stating that the various items in the petition would be considered as the rulemaking process moved forward.

Comments on the proposed new rule were received from the Division of Advocacy for the Developmentally Disabled, Department of Public Advocate.

The following comments from the N.F.B. are included in the new N.J.A.C. 10:97: definition "blind person" (N.J.A.C. 10:97-1.3), completion of probation (N.J.A.C. 10:97-3.1), absences (N.J.A.C. 10:97-4.2), payment for supplies purchased (N.J.A.C. 10:97-4.4), equipment (N.J.A.C. 10:97-4.6) disciplinary probation (N.J.A.C. 10:97-8.2), sanitation (N.J.A.C. 10:97-4.9), pricing of merchandise (N.J.A.C. 10:97-4.12), notification of unusual incidents (N.J.A.C. 10:97-4.13), operator owned or leased vending machines (N.J.A.C. 10:97-4.15).

Comment: N.J.B. proposed a definition of active participation by the Committee of Blind Vendors which would call for "joint planning and approval of policies, standards and procedures affecting the operation of the program."

Response: The Attorney General of New Jersey has reviewed pertinent statutes and regulations and issued an opinion on "active participation by the Committee of Blind Vendors". It states that "the Committee has an advisory or recommendatory responsibility to provide the Commission for the Blind with its views and comments regarding the Vending Stand Program." It further states that "both policy regulations and the statute clearly require the State agency to take into account the views of the intended recipients of the services; neither accords the recipient with more than a feedback role."

The definition of "active participation by the Committee of Blind Vendors" submitted by N.F.B. does not conform with the Attorney General's opinion. N.J.A.C. 10:97-9 does describe the role of the Committee of Blind Vendors in accordance with Federal and New Jersey rules.

The petition from N.F.B. included their definition of active participation by the Committee of Blind Vendors throughout the rule. Except for the deletion of the Committee of Blind

You're viewing an archived copy from the New Jersey State Library.

Vendors in a non-conforming role, the following sections of the N.F.B. petition are included in the new rule: selection and training (N.J.A.C. 10:97-2.2); operating agreement (N.J.A.C. 10:97-3.2); Commission loans to start business; and repayment of loans (N.J.A.C. 10:97-3.4); and weekly sales report (N.J.A.C. 10:97-5.1).

Comment: The Public Advocate expresses reservations regarding basic entitlement of blind persons to participate in the Vending Facility Program. In addition, they commented that the definition of "blind person", in this rule, is more restrictive than the eligibility requirements for other Commission programs.

Response: The Vending Facility Program is the Randolph-Sheppard program (P.L. 93-516) in New Jersey. All vending sites, whether on federal, state or private property, are subject to Randolph-Sheppard regulations. The Randolph-Sheppard Act has eligibility criteria (N.J.A.C. 10:97-2.1(b)), one of which is that the person applying must meet the definition of blind person (N.J.A.C. 10:97-1.3).

The use of the term "entitlement" in connection with this program is inappropriate. There are other options available to eligible visually impaired and blind persons under the regular vocational rehabilitation program.

Comment: The Public Advocate suggested that the standardized testing mentioned under selection and training (N.J.A.C. 10:97-2.2(a)3) include the statement that the test be administered in the medium most convenient to the applicant.

Response: All the requirements of the Rehabilitation Act of 1973, as amended, and the Civil Rights Act of 1964 (N.J.A.C. 10:97-1.2) apply to this chapter. These acts require that reasonable accommodations be made for all persons. This would include material being available in the appropriate form. Testing for all Commission programs is made available in an accessible form.

Comment: The Public Advocate commented on a number of aspects related to training and placement. Both the Public Advocate and N.F.B. commented on the promotion process.

Response: The final phase of a person's training to become a licensee includes a period of on-the-job training at a vending site (N.J.A.C. 10:97-2.2(b)). Upon completion of training that person is placed on the "ready for employment list" (N.J.A.C. 10:97-2.2(d)).

When a site becomes available, the trained person who is assigned, undergoes a three (3) month probation period (N.J.A.C. 10:97-2.5). During this time, and until a license is issued to that person at the successful completion of probation (N.J.A.C. 10:97-3.1), the person is a trainee under the vocational rehabilitation program.

The Commission is concerned that both the operator and the trainee are protected in the event of injury during the period of on-the-job training. The Attorney General of New Jersey has recommended that the trainee have the status of unpaid employee, (N.J.A.C. 10:97-2.2(b)) in order to protect both parties.

Many operators have express the opinion that they have an obligation to provide training opportunities for new entrants into the program. Vending facilities for training (N.J.A.C. 10:97-2.3(a)) provides the authority for such training. In actual practice the operator provides the training and is reimbursed for extra costs. If special conditions make it unfeasible for an operator to provide this training at a particular time, it is obvious that the trainee would not benefit and another training site is then found.

At regional meetings, which were held to discuss drafts of this rule, the majority of the operators agreed that the information to be included in announcements of vacancies (N.J.A.C. 10:97-7.3) was adequate. If an operator is interested in applying for the vacancy, more detailed information is available. Most operators have expressed the opinion that, as independent business people, interested persons should take the responsibility to obtain any additional information.

Promotional assignments are made with regard to record of performance from site visit reports (N.J.A.C. 10:97-5.3(b)) and weekly sales reports (N.J.A.C. 10:97-5.1), as well as seniority. The Commission provides a professional staff to administer the program. Placement from the "ready for employment list" can only be made after the transfer and promotion process has been completed.

The operating agreement between the Commission and the operator is a standard agreement. The Agreement states the specific location of each facility and the hours of operation in order to conform to the permit issued to the Commission by the host site.

Comments: The Public Advocate questioned the method of valuation of stock in relation to loans of cash and/or stock to start business.

Response: Inventory taking (N.J.A.C. 10:97-3.5) follows Loans to start business (N.J.A.C. 10:97-3.4(a)). These sections are placed together because of their inter-relationship. The valuation of stock is by accepted business practice, wholesale cost.

Comment: The Public Advocate suggested that a minimum number of hours per week be included within personal operation of vending facility (N.J.A.C. 10:97-4.1).

Response: One of the objectives in the Randolph-Sheppard Act (P.L. 74-732) and of the program is to help blind persons to be self-supporting. Since the Randolph-Sheppard Act provides support and incentives to accomplish this objective, participation in the program carries the understanding that the operation of a vending facility is the full time and the primary occupation of the licensee. Hours of operation vary from site to site and are set forth in each operating agreement and each permit.

Comment: The Public Advocate and N.F.B. suggested that notification of unusual incidents (N.J.A.C. 10:97-4.13) be limited to those incidents that involve legal action.

Response: While the Commission agrees with both groups that legal action or threat of legal action must be reported, many incidents can be satisfactorily resolved before they reach such a stage. The Commission is responsible to help the operator to resolve problems. In addition, the Commission could be made a party to a legal action. It is important that all unusual incidents be reported for early resolution.

Comment: The Public Advocate would like "or any losses resulting from their neglect or failure to observe the regulations of the Commission", be deleted from responsibility for damage (N.J.A.C. 10:97-4.14).

Response: The operator is responsible for acts of commission as well as acts of omission which result in damage to Commission property.

Full text of the changes between proposal and adoption follow (additions to proposal shown in boldface with asterisks ***thus***; deletions from the proposal shown in brackets with asterisks *[thus]*).

You're viewing an archived copy from the New Jersey State Library.

CHAPTER 97
RULES GOVERNING THE VENDING FACILITY PROGRAM OF THE NEW JERSEY COMMISSION FOR THE BLIND AND VISUALLY IMPAIRED, DESIGNATED AS THE STATE LICENSING AGENCY

SUBCHAPTER 1. GENERAL PROVISIONS

10:97-1.1 Legal authority

(a) This chapter is promulgated pursuant to authority of P.L. 74-732, as amended by P.L. 83-565 and P.L. 93-516; 34 CFR, part 395.

(b) N.J.S.A. 30:6-15.1 and N.J.S.A. 30:6-15.2.

10:97-1.2 Uniform applicability of chapter compliance with Federal standards

This chapter shall be deemed uniformally and impartially applicable to all persons and procedures and is in complete compliance with the laws of the State of New Jersey, the Randolph-Sheppard Act, Title VI of the Civil Rights Act of 1964, and the Rehabilitation Act of 1973, as amended.

10:97-1.3 Definitions

"Blind person"- a person who, after examination by an ophthalmologist or by an optometrist, which ever such person shall select, has been determined to have:

1. Not more than 20/200 central visual acuity in the better eye with corrective lenses, or

2. An equally disabling loss of the visual field as evidenced by a limitation to the field of vision in the better eye to such a degree that its widest diameter subtends an angle of no greater than 20 degrees.

"Committee"- means Committee of Blind Vendors.

"Federal Set- Aside Funds"- funds which accrue to the Commission from an assessment against the net proceeds of each vending facility in the Vending Facility Program and any income from vending machines on Federal property which accrue to the Commission.

"Full Evidentiary Hearing"- for purposes of this code Full Evidentiary Hearing and Administrative Hearing are synonymous.

"License"- a written certificate issued by the Commission to a qualified legally blind person permitting the operation of a vending facility.

"Licensee"- a blind operator who has been duly licensed by the Commission.

"Managements services"- supervision, inspection, quality control, consultations, bookkeeping services, regulating, in-service training, and other related services provided on a systematic basis to support and improve vending facilities operated by blind vendors.

"Net profit or net proceeds"- the amount remaining from the sale of articles or services of vending facilities, and any vending machine or other income accruing to blind vendors after deducting the cost of such sale and other expenses. Any set-aside levy shall not be included in calculating net profit.

"Operator"- qualified blind person assigned by the Commission to operate a vending facility on Federal or other property. An operator is not an employee of the State of New Jersey.

"Operating agreement"- the agreement which shall be entered into between the Commission and each operator, covering the basic terms and conditions required of each party for the operation of a specific vending facility.

"Permit"- the agreement between the Commission and a department or agency in the control of the maintenance, operation and protection of Federal and non-Federal property whereby the Commission is authorized to establish a vending facility.

"Property manager"- The official responsible for the property where the vending facility is located.

"Ready for employment list"- a roster of blind persons who have successfully completed training for the vending facility operations and are certified by the Commission.

"Revocation of license"- termination of license for cause after a Full Evidentiary Hearing.

"Secretary"- the Secretary of the United States Department of Education.

"Set aside levy"- the extent to which funds are to be set aside from the net proceeds of the operation of the vending facilities and applicable vending machine income, in an amount determined by the Commissioner of the Rehabilitation Services Administration (U.S. Department of Education) to be reasonable.

"State licensing agency"- New Jersey Commission for the Blind and Visually Impaired.

"Suspension"- a temporary discontinuation of the Operating Agreement resulting in the halting of operations. The Operating Agreement will be restored when the reason for suspension has been remedied. If the reason for suspension is not or cannot be remedied, the operating agreement will be revoked, after a full evidentiary hearing.

"Vending facility"- means automatic vending machines, cafeterias, snack bars, cart service, shelters, counters, and such other appropriate auxiliary equipment which may be operated by blind licensees and which is necessary for the sale of newspapers, periodicals, confections, tobacco products, foods, beverages, and other articles or services dispensed automatically or manually and prepared on or off the premises in accordance with all applicable health laws, and including the vending or exchange of changes for any lottery authorized by State law and conducted by an agency of a State.

"Vending Facility Program fund-non-Federal"- funds which accrue to the Vending Facility Program from all non-Federal sources.

10:97-1.4 Objectives

(a) The regulations of the New Jersey Commission for the Blind and Visually Impaired are intended to set forth the administrative requirements governing the operation of the Vending Facility Program on Federal and non-Federal property.

(b) The Vending Facility Program is designed to:

1. Provide blind persons with remunerative employment;

2. Enlarge the economic opportunities for blind persons;

3. Stimulate blind persons to greater efforts in striving to make themselves self supporting.

4. Improve the public awareness of the business capabilities of blind and visually impaired persons.

SUBCHAPTER 2. PROGRAM ENTRY REQUIREMENTS

10:97-2.1 Application and qualification to enter program

(a) Any blind person desiring to operate a vending facility, under the supervision of the Commission, shall apply to the Commission and will be referred to the Vocational rehabilitation Program in order to receive proper evaluation.

(b) The interested blind person must be certified as eligible by the Vocational Rehabilitation Program and be a citizen of

You're viewing an archived copy from the New Jersey State Library.

the United States in order to participate in the Vending Facility Program.

10:97-2.2 Selection and training

(a) A blind person who has been certified eligible by the Vocational Rehabilitation Program and still wishes to enter the Vending Facility Program must meet the following minimum criteria:

1. Mobility skills-ability to move about and orient to environment, especially in small areas.

2. Self communication skills-the ability to keep information for oneself in some organized form and the ability to retrieve such information when needed.

3. The ability to do simple arithmetic as demonstrated by a standardized test of this skill.

(b) If selected for the program he/she will undergo a course of training which will include a period of on-the-job training at an actual vending facility.

(c) The vendor trainee will have the status of unpaid employee.

(d) Upon satisfactory completion of this training, the person will be issued a certificate and placed on the "ready for employment list".

10:97-2.3 Vending facilities for training

(a) Any vending facility may be used for evaluation or training under terms and conditions established in the operating agreement.

(b) The vendor trainee will be an unpaid employee.

10:97-2.4 Placement

When a vending facility is available, the Commission will make every effort to match the individual needs and capabilities of persons on the ready for employment list to the demands of the vending facility offered to him/her.

10:97-2.5 Probation for a new operator

(a) When a person from the ready for employment list is assigned to a vending facility, he/she will be subject to a probationary period of three (3) months.

1. Written reports will be prepared at end of six (6) weeks and at the end of three (3) months.

2. The three (3) month report will certify that the probationary period has or has not been successfully completed.

(b) This probationary period may be extended, one month at a time, with a maximum of two extensions.

1. A written report will be completed after each extension.

(c) All reports will be read to the operator and a copy of each report given to the operator.

10:97-2.6 Failure to complete probation

Any person who is unable to satisfactorily complete the probation period, after a maximum of two (2) extensions, will be terminated from the Vending Facility Program and referred for Vocational Rehabilitation re-evaluation.

SUBCHAPTER 3. LICENSING OF OPERATORS

10:97-3.1 Completion of probation period and license

(a) When the probationary period has been successfully completed, a license will be issued to the vending facility operator for an indefinite period but subject to suspension or revocation.

(b) This license shall be displayed to the public.

(c) The granting of a license to an operator is not subject to transfer and the license is immediately terminated by death, revocation or voluntary withdrawal from the business by the licensee.

10:97-3.2 Operating agreement

(a) An agreement shall be entered into between the Commission and the operator, covering the basic terms and conditions required of each party each time an operator begins business at any vending facility, including the probation period.

(b) No operator will be charged rental for the operation of a vending facility on Federal, State, county or municipal property.

10:97-3.3 Responsibility of the Commission

(a) The Commission will conduct surveys to establish new facilities in Federal and non-Federal locations.

(b) The Commission must comply with all of the Randolph-Sheppard requirements for a state licensing agency.

10:97-3.4 Commission loans to start business; and repayment of loans

(a) When a blind vendor is assigned to a facility, a non-interest bearing loan in the amount of up to $1,000 in cash and/or equivalent stock may be granted by the Commission, upon request of the operator, for the initial stock and supplies of a vending facility.

(b) Repayment may be deferred until the first day of the fourth month after the effective date of the operating agreement. The operator will be required to repay the loan within 18 months.

(c) Exceptions to the maximum loan may be granted by the Executive Director of the Commission upon written request of the operator, including justification which relates to the objectives of the program.

10:97-3.5 Inventory taking

(a) When a business is transferred from one operator to another, for any cause, the new operator has the option of purchasing some or all of the existing inventory of the previous operator, if the previous operator wishes to sell all or part of the inventory.

(b) The Commission shall schedule the taking of inventory on the effective date of transfer or closing of the facility. Both operators and a representative of the Commission are to be present so that there can be agreement as to amount and value of stock and supplies on hand.

(c) Either operator may waive, in writing, his/her right to participate in the scheduled inventory. If either operator refuses to participate in the inventory taking or signs a waiver, the Commission shall determine the value of the inventory and document the procedure in operator's record.

SUBCHAPTER 4. RULES OF OPERATIONS

10:97-4.1 Personal operation of vending facility

(a) The operator shall personally conduct the business assigned to him/her.

(b) The operator shall devote his/her full time to the conduct of the business.

10:97-4.2 Absences

(a) The operator bears full responsibility for the operation of the business during his/her absence.

1. In the event that an operator is absent, the operator shall select and compensate a qualified substitute.

You're viewing an archived copy from the New Jersey State Library.

2. Advance notice to the Commission is not necessary unless the absence would involve the closing of the facility.

10:97-4.3 Employees
(a) Preference in employment shall be given to other blind or visually impaired people and other disabled people.
(b) The operator is required to comply with all State and Federal laws pertaining to hiring and employment.

10:97-4.4 Payment for supplies purchased
(a) The operator may take advantage of credit extended by suppliers, provided that the Commission shall have no liability in the event that an operator abuses any such credit.
(b) The Commission may impose restriction on the use of credit by an operator in the event of a pattern of abuse.

10:97-4.5 Insurance
The operator shall carry Workers' Compensation for all workers hired by the operator and also public and product liability insurance.

10:97-4.6 Equipment
(a) Title to and interest in all equipment shall be vested in the Commission, with the exception of equipment that has been purchased or leased by the operator.
(b) Any request for purchase or lease of equipment by an operator must be made in writing to the Commission. The Commission will notify the operator of its decision regarding the request within twenty (20) days.
(c) The granting of permission to purchase equipment does not imply agreement on the part of the Commission to maintain the equipment or purchase the item from the operator at the time he/she leaves the program or from his/her heirs or assigns after his/her death.

10:97-4.7 Maintenance and repair of equipment
(a) All vending facility equipment in which the Commission has title shall be maintained in good repair to insure continued operation of the facility.
1. The operator will pay the first $50.00 for the repair of each item; the Commission will pay for repair charges over and above the first $50.00.
(b) Worn and obsolete equipment shall be replaced as necessary when the cost of repair of the equipment cannot be justified in relation to the value of the equipment.

10:97-4.8 Disposition of Commission owned property
The operator or his/her employees shall not destroy, sell or in any way alter or dispose of any of the fixtures, equipment or other property to which the Commission holds title or permit anyone else to do so without the written authorization of the Commission.

10:97-4.9 Sanitation
(a) Operators are required to meet all Federal, State, county and municipal health standards, including the standards required by the Commission. These standards include a regular schedule of maintenance of all fixtures and equipment and a regular scheduled cleanup of all areas of the facility by the operator.
(b) All recommendations regarding appearance and sanitation, made to an operator by a Commission field staff member, must be implemented within the time frame established by the Commission in the site review report.

10:97-4.10 Stock
(a) The type of articles to be sold in a facility shall be determined by the property manager and the Commission.
(b) Under no circumstances will approval be given for the sale of any item which is prohibited by law or ordinance.

10:97-4.11 Signs
The licensed operator shall use only such identifying signs and insignia as approved by the Commission and the property manager.

10:97-4.12 Pricing of merchandise
(a) Prices will be set by the operator in consultation with the Commission's representative.
(b) The retail price of merchandise at a facility shall not exceed the general price pattern prevailing in the immediate locality.

10:97-4.13 Notification of unusual incidents
(a) The operator shall immediately notify the Commission, by telephone, of any unusual incident.
1. An unusual incident is anything that causes or might cause the business a problem.
2. Such incidents may be, but are not limited to, any governmental or legal actions, customer's complaints, accidents and insurance claims.

10:97-4.14 Responsibility for damage
The operator and his/her workers, if any, shall be liable to the Commission for any damage of the equipment or fixtures owned by the Commission or any losses resulting from their neglect or failure to observe the regulations of the Commission.

10:97-4.15 Operator owned or leased vending machines
(a) Operators must obtain written approval from the Commission and the property manager to have vending machines as part of the facility.
(b) All income from these vending machines will be counted in the gross sales of the facility.

SUBCHAPTER 5. RECORDS AND MONITORING

10:97-5.1 Weekly sales report
(a) The operator must submit to the Commission the prescribed weekly sales report. A daily report, invoices or photocopies and, when available, cash register tapes or photocopies must also be submitted.
(b) The weekly report must be submitted within seven (7) days of the close of business for the week. This report does not constitute complete financial reporting as set forth in N.J.A.C. 10:97-5.2 below.

10:97-5.2 Record keeping
(a) The operator is required to keep books of account. These books of account shall meet the requirements of the Internal Revenue Services, Social Security Administration, the New Jersey Sales Tax Division, the Division of Employment Security, the Division of Workers' Compensation and any other agency having jurisdiction.
(b) Such records must be open for the inspection of the Commission one (1) working day after receipt of the notice requesting inspection.

You're viewing an archived copy from the New Jersey State Library.

10:97-5.3 Right of inspection

(a) The operator shall recognize any representative directed by the Commissioner of Human Services or the Commission to make unannounced inspections in order to monitor the appearance and conduct of the vending facility.

(b) The Commission shall make site visits at a minimum of four (4) times per year, however more frequent visits may occur. Each time a Commission representative visits a vending facility, a site visit report will be completed, read to the operator (who will have the right to include his/her comments) and signed by both the operator and the Commission representative. The operator will retain a copy and the Commission will retain a copy. It is the responsibility of the operator to implement the requirements set forth in the site visit report.

SUBCHAPTER 6. PROGRAM: FISCAL REQUIREMENTS

10:97-6.1 Federal Set Aside Fund

(a) The Federal Set Aside Fund consists of those funds accruing to the program from unassigned vending machine income from Federal locations and any set aside levy.

(b) The funds may be used only for purpose of:

1. Maintenance and replacement of equipment;
2. The purchase of new equipment;
3. Management services;
4. Assuring a fair minimum of return to vendors; or
5. The establishment and maintenance of retirement or pension funds, health insurance contributions, and provisions for paid sick leave and vacation time, if it is so determined by a majority vote of blind vendors, after the Commission provides to each vendor information related to the proposed purposes.

(c) Uses (b)1., 2., 3., and 4. can be authorized only by the Commission. Use (b)5. can only be authorized by a majority vote of all the operators in the Vending Facility Program.

10:97-6.2 Set aside levy

(a) The Commission may exercise the option of assessing a set aside levy from the net proceeds of the operation of the vending facilities whenever the Federal Set Aside Fund balance drops below $150,000. Funds may be set aside only for the purposes stated in N.J.A.C. 10:97-6.1(b) above.

(b) The Commission shall set out the method of determining the charge for each of the allowable purposes and this will be done with the active participation of the Committee of Blind Vendors.

1. This levy will be designed to prevent a greater charge for any purpose than is reasonably required for that purpose.
2. The Commission shall maintain and provide to the Committee of Blind Vendors adequate records to support the need for a set aside levy.

(c) The Commission will provide to the Committee of Blind Vendors, by the first of each calendar year, figures on the actual cost of the Vending Facility Program for the previous Federal fiscal year.

(d) The rate of levy must be submitted to, and approved by, the Commissioner of the Rehabilitation Services Administration prior to implementation.

10:97-6.3 Vending Facility Program Fund Non-Federal

The Vending Facility Program Fund-Non-Federal, consists of all monies accruing to the Program from non-Federal sources. These funds will be used to cover expenses which are necessary for the operation of the Program except for costs which can be paid from the Federal Set Aside Fund.

10:97-6.4 Vending machine income due blind vendors

Operators located on Federal property may be eligible for vending machine income pursuant to Randolph-Sheppard regulations *[(34 CFR 395:32)]* ***(34 CFR 395:8).*** Any such income due an operator which has been disbursed to the Commission, shall be remitted to the operator on at least a quarterly basis. All unassigned vending machine income from Federal sources will become a part of the Federal Set Aside Fund.

10:97-6.5 Access to program and financial information

(a) Each operator will be provided access, in braille, recorded tape, or print, to all financial data relevant to the operation of the Vending Facility Program.

1. This will include quarterly and annual financial reports, provided that such disclosure does not violate Federal and State laws pertaining to the disclosure of confidential information.

SUBCHAPTER 7. TRANSFER OF FACILITY FROM ONE OPERATOR TO ANOTHER

10:97-7.1 Advance notice of termination

If an operator decides to terminate his/her assignment as a vending facility operator, he/she shall notify the Commission by mail at least one (1) month in advance of the actual date of termination.

10:97-7.2 Procedure when operator leaves a facility

(a) Whenever an operator is transferred, terminated, or otherwise leaves a facility all equipment and other property belonging to the Commission shall be surrendered in good order and condition, except for reasonable wear and tear.

(b) All accounts and bills must be paid in full, and an inventory of stock taken as required under the provisions of "Inventory taking" at N.J.A.C. 10:97-3.4.

10:97-7.3 Promotions and transfers

(a) The supervisor of the Vending Facility Program will circulate a letter to all operators announcing vending facility vacancies.

1. The letter shall contain a description and the location of the facility, the net profit for the previous year, scheduled hours of operation and other significant information about the vacancy.

(b) Any interested operator must apply, in writing, to the supervisor of the Vending Facility Program within two (2) weeks.

(c) The selection will be made by evaluating the operator's record of performance with consideration to seniority.

(d) Once an operator accepts an assignment to a new location, the only way that he/she can return to the previous location is as a new applicant.

10:97-7.4 Interim operator

When a vending facility becomes vacant, it is often necessary to keep that facility operating in order that the location is not lost to the Vending Facility Program. Such a vacancy may be filled by the appointment of an interim operator, pending the completion of the formal promotion process. The interim operator may be appointed from the ready to employ list.

You're viewing an archived copy from the New Jersey State Library.

SUBCHAPTER 8. SUSPENSIONS AND GRIEVANCE PROCEDURES

10:97-8.1 Immediate suspension

(a) In the event that an operator is in violation of the regulations and/or laws of a governmental agency, he/she may be subject to immediate suspension.

(b) Grounds for the immediate suspension of an operator shall exist when any activity, policy or conduct of an operator presents a serious or imminent hazard to the health, safety, and well being of the public or otherwise demonstrates total unfitness or inability to operate a vending facility in compliance with all of the requirements of these regulations and all applicable Federal and State law.

(c) The operator will be notified of the reason for suspension. In addition, the operator will be afforded an Administrative Review as soon as possible after the suspension, but in no event later than ten (1) days after the suspension. The operator is entitled to all the grievance procedures afforded by New Jersey and Federal Law, including an Administrative Hearing if the Administrative Review does not resolve the problem (see N.J.A.C. 10:97-8.3(c)).

10:97-8.2 Disciplinary probation

(a) In situations other than immediate suspension, the operator must comply with all of the requirements in these regulations and of State and Federal law. In the event that there is a violation, the operator will be placed on disciplinary probation. The operator will be given a written notice by the Commission stating the grounds at issue and shall have a period of fifteen (15) days to correct any violation cited in notice.

(b) In the event that the violation is not corrected during the disciplinary probation period, the Commission may issue to the operator a notice of termination, citing any unresolved violations. Termination shall be effective fifteen (15) days after such notice of termination, provided that the operator be given given an opportunity for a Full Evidentiary Hearing/ Administrative Hearing prior to final termination.

10:97-8.3 Administrative Reviews and Hearings

(a) The Commission shall afford an opportunity for an Administrative Review to each operator who is dissatisfied with any action arising from the operation or administration of the Vending Facility Program when a written request is submitted within fifteen (15) days of the occurence of the action. The operator has the option of transmitting the grievance through the Committee of Blind Vendors.

(b) The Administrative Review shall be conducted by the Commission as an internal non-contested case not subject to New Jersey Uniform Administrative Procedure Rules (N.J.A.C. 1:1-1 et seq.).

(c) The Commission shall afford an opportunity for an Administrative Hearing to each operator when the matter is a contested case as determined by the Executive Director in accord with the Administrative Procedure Act (N.J.S.A. 52:14B-1 et seq.) and the Uniform Administrative Procedure Rules (N.J.A.C. 1:1.1 et seq.). A contested case is a matter:

1. Which requires a hearing by statute or constitutional provisions; and

2. Which is not susceptible of informal resolution; and

3. Which the required hearing is designed to result in an adjudication concerning the rights, duties, obligations, privileges, benefits or other legal relations of specific parties over which there exist disputed questions of fact, law, or disposition.

(d) All Administrative Hearings shall contain the following procedural elements to assure due process to blind vendors:

1. Notice; of the time and date of the hearing and the issues in dispute must be given sufficiently in advance of the hearing so that reasonable opportunity to prepare shall be afforded.

2. Right to be represented by counsel.

3. Impartial presiding official.

4. Right to present witnesses and to cross-examine adverse witnesses.

5. Decision on the record.

6. Transcript of the proceedings.

7. Notice, conduct of the hearing and decision within prescribed and reasonable time limits.

(e) Additionally, all Administrative Hearings shall be conducted pursuant to the Administration Procedure Act (N.J.S.A. 52:14B-1 et seq.) and the Uniform Administrative Procedure Rules (N.J.A.C. 1:1-1 et seq.) subject to any superseding Federal or State law (see N.J.A.C. 1:1-1 (a) and 34 C.F.R. 395).

SUBCHAPTER 9. COMMITTEE OF BLIND VENDORS

10:97-9.1 Committee of Blind Vendors

(a) The Commission shall provide for the biennial election of a State Committee of Blind Vendors which, to the extent possible, shall be representative of all blind vendors in the Vending Facility Program on the basis of such factors as geography and vending facility type, with the goal of providing for proportional representation of blind vendors on Federal property and blind vendors on other property.

(b) The Committee shall be elected by the majority of all operators in the State Program.

1. Participation by any blind vendor in any election shall not be conditioned upon the payment of dues or any other fee.

(c) The Committee of Blind Vendors shall:

1. Actively participate with the Commission in major administrative decisions and policy and program development decisions affecting the overall administration of the Vending Facility Program.

2. Receive and transmit to the Commission grievances at the request of blind vendors and serve as advocates for such vendors in connection with such grievances.

3. Actively participate with the Commission in the development and administration of the system for the transfer and promotion of the blind vendors.

4. Actively participate with the Commission in the development of training and re-training programs for blind vendors.

5. Sponsor, with the assistance of the Commission, meetings and instructional conferences for blind vendors within the State.

(d) It is the responsibility of the Committee of Blind Vendors to establish bylaws under which they will operate and which are accepted by the Commission.

You're viewing an archived copy from the New Jersey State Library.

LAW AND PUBLIC SAFETY

(a)

DIVISION OF ALCOHOLIC BEVERAGE CONTROL

Filing and Advertising Notice of Application for Municipal License

Readoption: N.J.A.C. 3:2-2.1, 2.2 and 2.4 through 2.16
Readoption with Amendment: N.J.A.C. 13:2-2.3

Proposed: February 21, 1984, at 16 N.J.R. 345(a).
Adopted: March 27, 1984 by John F. Vassallo, Jr., Director, Division of Alcoholic Beverage Control.
Filed: April 2, 1984, as R.1984 d.141, **without change**.

Authority: N.J.S.A. 33:1-5, 12, 19, 20, 22, 23, 24, 25, 26, 27, 34, 35, 39 and 74.

Effective Date of Readoption: April 2, 1984.
Effective Date of Amendments: April 16, 1984.
Expiration Date pursuant to Executive Order No. 66(1978): April 2, 1989.

Summary of Public Comments and Agency Response: **No comments received.**

Full text of the readoption appears in the New Jersey Administrative Code, as amended in the New Jersey Register, at N.J.A.C. 13:2-2.1, 2.2 and 2.4 through 2.16.

Full text of the readoption with amendment follows.

13:2-2.3 Issuing authority defined
Name of "issuing authority" in the form in section 2 of this subchapter usually means the governing board or body of the municipality, whatever the name may be, for instance the mayor and common council, the township committee, and so forth, except where a municipal board of alcoholic beverage control has been created, in which case such board is the issuing authority. If application is made by a member of any issuing authority or by a corporation, organization or association (except a club license) in which any member of an issuing authority is interested directly or indirectly, the director is the issuing authority and in that event the notice must state that objections be addressed to the Director of the Division of Alcoholic Beverage Control.

(b)

DIVISION OF ALCOHOLIC BEVERAGE CONTROL

Marketing and Advertising
Regulation of Display Services and Advertising Promoters

Adopted New Rule: N.J.A.C. 13:2-24.12

Proposed: November 21, 1983, at 15 N.J.R. 1921(a).
Adopted: March 27, 1984, by John F. Vassallo, Jr., Director, Division of Alcoholic Beverage Control.
Filed: April 2, 1984, as R.1984 d.140, **with technical and substantive changes** not requiring additional public notice and comment (see N.J.A.C. 1:30-3.5).

Authority: N.J.S.A. 33:1-3, 1-23, 1-35, 1-39.

Effective Date: April 16, 1984.
Expiration Date pursuant to Executive Order No. 66(1978): April 12, 1989.

Summary of Public Comments and Agency Responses:

Opportunity was afforded by the notice of proposal for interested persons to submit in writing, data, views or arguments relevant to the proposed regulation on or before December 21, 1983 and, pursuant thereto, letters were received from three such interested persons or organizations. A summary of each of them, in the order received and the responses made thereto, follows:

(1) David S. Piltzer, Esquire, on behalf of his client, The Alliance of New Jersey Liquor Retailers, Inc., a trade association he stated has approximately 125 licensed retailers, sent written comment objecting to the adoption of the proposed rule. He stated his client's position as being that there is no statutory authority for the adoption of the rule, that it would be unconstitutional and its adoption would be unwise and inappropriate. Mr. Piltzer claimed that the Alcoholic Beverage Law, N.J.S.A. 33:1-1, et seq., contains no express provision to require the licensing of "display services or advertising promoters," and since they are not involved directly in the manufacture, sale, or distribution of alcoholic beverages, they are not subject to licensing requirements, and therefore there is no authority to accomplish it indirectly by prohibiting licensees from dealing with these businesses unless they are "licensed." Mr. Piltzer went on to assert that each of the sections cited for the authority for the regulation fails to support the authority. Mr. Piltzer then went on to assert a constitutional infirmity with the regulation under the First Amendment since there is a right to reach the public's attention through the means of advertising the licensed businesses and products and government may not take actions which are

You're viewing an archived copy from the New Jersey State Library.

an unwarranted interference with the exercise of such "commercial speech". Mr. Piltzer cited cases to support his position. He also asserted that newspapers and advertising agencies would be precluded from doing business with any New Jersey licensee, and the rule would undoubtedly stifle all advertising by New Jersey licensees. Mr. Piltzer lastly urged that the rule would be unwise and inappropriate and the problems addressed by the rule could be better solved by hiring additional investigative personnel and better training investigators.

A written response was furnished to Mr. Piltzer, first pointing out that there are numerous reasons supporting the legislative authority of the director to adopt the rule, including the express authority in N.J.S.A. 33:1-39 to adopt regulations concerning the "identification of licensees and their employees" and the "control of signs and other displays on licensed premises," as well as the general authority to adopt regulations concerning "such other matters whatsoever as are or may become necessary in the fair, impartial, stringent and comprehensive administration of this chapter." As to the constitutional arguments, the response cited United States Supreme Court authority indicating states have authority under the 21st amendment to limit or ban alcoholic beverage advertising. The response then went on to point out that newspapers and other periodicals, whose services consist in providing advertising for a fee and establishing the appropriate mat or layout, are not "advertising promoters" within the intent of the regulation. That term rather encompasses the person who basically functions as an employee of the licensee in furtherance of the licensed business by providing marketing advice, product selection, display suggestions and other marketing recommendations to either an individual licensee or a group of licensees who have joined together to form an advertising cooperative. It was indicated that in any adoption notice concerning advertising promoters, the Division would clarify any confusion in the applicability of the regulation. Lastly, it was noted that the proposed rule is not intended to preclude any licensee from conducting lawful merchandising or marketing practices, but seeks only to identify and qualify those persons who provide direct advice or services in conjunction with the sale of an alcoholic beverage product.

(2) A comment was received from the New Jersey Liquor Stores Association, written by Thomas E. Leach, Legislative Consultant, advising that the officers of the Association instructed him to enter into the record that the Association has, since the inception of cooperative price advertising, repeatedly urged regulation of the kind embodied in the proposed rule. The comment also noted wholehearted concurrence with the benefits set forth in the Social Impact statement in the proposal. A response was furnished to the Association acknowledging the comment.

(3) Comment was received from the New Jersey Press Association, by Edwin W. Tucker, General Manager, with an appended opinion by its counsel, Thomas J. Cafferty, Esquire, expressing concern that the rule could be interpreted to include newspapers and suggesting that, if it were, it would be unconstitutional, and therefore it should not be adopted or it should be adopted with a clarification exempting all newspapers and their employees from its application, which would then furnish the division with the disciplinary tools it desires within the trade without impinging on the rights of a free press.

A response was made, both by telephone and in writing, noting that it was never intended to include newspapers or other periodic publications and referring to the summary in the proposal. It was also noted that a technical clarification would be included to eliminate any confusion should the provisions concerning advertising promoters be adopted. Lastly, the response also pointed out to the New Jersey Press Association and its members that the regulation is not intended in any way to interfere with advertising of alcoholic beverages, but is merely concerned with knowing what nonlicensees are involved to such an extent that they might be exercising the incidents of ownership of a license. Specifically, the Division is concerned with those persons, which it believes to be very few in number, who are entering into arrangements with licensees whereby they are basically controlling what is being advertised rather than how it is being advertised.

In addition to the written comments received, after filing of the proposal, counsel to the Division noted a possible ambiguity in the proposed N.J.A.C. 13:2-24.12(a) 1 and 2 if a publicly held corporation was registering under the proposed regulations. As written, the proposed rule could be construed to require all shareholders, no matter how small their interests, to be required to furnish the affidavit or certification under N.J.A.C. 13:2-24.12(a)2. Other regulations and licensing procedures for alcoholic beverage licenses only require disclosures by shareholders owning one percent or more of stock. Such was also intended here and therefore clarifying language is being added to N.J.A.C. 13:2-24.12(a)1 in the adoption.

Additionally, after the expiration period for public comment, the Division reassessed the within proposal and has determined to now only adopt the provisions proposed in new rule, N.J.A.C. 13:2-24.12 as they related to display services. The regulation of advertising promoters, as proposed, will be deferred while the Division undertakes further evaluation of the method proposed to achieve the control objectives fostered by regulating advertising promoters, as well as giving consideration to limiting the scope of regulations to individuals whose activities exclusively or predominately involve alcoholic beverage retailing activities.

The provisions requiring those businesses that furnish display or point-of-sale advertising materials to retail licensees shall be adopted. These business activities clearly encompass direct alcoholic beverage retailing activities on the licensed premises at the specific request of and as agents or employees for New Jersey licensed manufacturers and wholesalers or unlicensed out-of-state manufacturers, suppliers or importers that are authorized to sell their products in New Jersey. The display and point-of-sale advertising support provided by suppliers and wholesalers only occurs in conjunction with a retail licensee's actual sale or intended purchase of the alcoholic beverage product of the supplier or wholesaler. The services are integrally tied to the sale and visual display of alcoholic beverage products. The display company's activities occur on licensed premises and remain a part of the licensee's day-to-day display and sale of alcoholic beverage products.

To properly identify these display companies and the beneficial owners thereof, and to audit the transactions which occur are essential to insure compliance with numerous provisions in the Alcoholic Beverage Law and Division Regulations involving prevention of discrimination in services and prices, unlawful rebates and discounts, prohibited tied house and tied sales situations and other unlawful trade and marketing practices.

The changes in the adopted rule from the proposal will not change who and what are being affected as it relates to the display companies. Similarly, the mandates of the rule are not being changed as they relate to display companies. The same provisions being proposed are being adopted with the excep-

You're viewing an archived copy from the New Jersey State Library.

tion that advertising promoters are not included. The essential distinctions between entities that perform functions as display companies and entities that can be categorized as advertising promoters would indicate that the failure to adopt the registration, disclosure and report provisions as to advertising promoters would not, in and of itself, give rise to any new basis for comment or objection to the proposal by display companies. Display companies provide on-premises advertising and marketing materials and services at a specific retail licensed outlet for which they are paid on a job by job basis by an alcoholic beverage distributor or manufacturer. Advertising promoters are generally agents of a group of retail licensees for whom the advertising promoter provides continued advertising and marketing advice pursuant to a term agreement. Thus, the entity which generally retains the services differs. Display companies work for and on behalf of alcoholic beverage distributors, manufacturers and suppliers. In many instances, the manufacturer or suppliers has offices outside the State of New Jersey and access to its records is difficult and time consuming. Advertising promoters work for and on behalf of retail licensees that are soley located in the State of New Jersey and whose records are directly accessable to Division investigators.

In sum, the changes between the rule as proposed and as adopted are determined to be not substantial so as to require a further publication of a new proposal. The specific changes from the proposals included in the adoption involve the deletion of the term "advertising promoter" or its equivalent language throughout the new rule; the clarification provisions in N.J.A.C. 13:2-24.12(a)1 concerning publically traded corporations that would have to register under the rule; and the modification in N.J.A.C. 13:2-24.12(a)4 to replace the "March 1" date for display companies to obtain a "special permit" to "May 1" to obtain a "registration acknowledgement". The change of date is a result of the lapse of time between proposal and adoption. The elimination of the "special permit" and replacement with "registration acknowledgement" reflects the elimination of any fee requirements to be borne by the display companies. This latter change will reduce any potential economic costs on companies required to register and will not cause any economic hardship on the Division inasmuch as existing personnel and equipment can absorb this additional function.

Full text of the adoption follows (additions to the proposals shown in boldface with asterisks ***thus***; deletions to the proposal shown in brackets with asterisks *[thus]*).

13:2-24.12 Display services *[and advertising promoters]*

(a) No licensee, permittee, or registrant privileged to engage in the commerce of alcoholic beverages in this State shall, directly or indirectly, furnish to, provide payment for, receive or advertising accept anything of value from, or otherwise utilize in any manner whatsoever, any display service *[or advertising promoter]* unless such service *[or advertising promoter]* unless such service *[or promoter]* has registered with the Division in a form prescribed by the Director. Such registration shall include:

1. The name and address of the display service *[or advertising promoter]* and all officers, directors, partners, stockholders and/or employees thereof ***unless a publicly traded corporation, in which case only officers, directors and stockholders having at least one percent interest need be furnished***;

2. An affidavit or certification that no person listed in N.J.A.C. 13:2-24.12(a)1 would be disqualified from having an interest in an alcoholic beverage license in this State;

3. Copies of all existing *[promotion or]* ***display*** service agreements with licensees, permittees, registrants, suppliers, importers, manufacturers or cooperatives doing business in the State of New Jersey; and

4. The issuance of a *[special permit]*, ***registration acknowledgment***, which shall be renewable on "[March]* ***May*** 1 of each year *[, upon payment of a fee to be established by the Director]*.

(b) Every display service *[or advertising promoter]* shall file with the Director quarterly reports on or before the 15th of January, April, July and October for the preceding calendar quarter, which reports shall identify the amounts and sources of all monies received from any licensee, permittee, registrant, suppliers, importer or manufacturer of alcoholic beverages, *[or cooperative]*; indicate the name, address, and license number of all licensees to which services were furnished; and set forth, *[if applicable,]* the value of the *[advertising or]* display materials furnished to or on behalf of each such licensee. Such reports shall be confidential pursuant to N.J.A.C. 13:2-29.2(a)3.

(c) Every licensee, permittee or registrant privileged to engage in the commerce of alcoholic beverages in this State shall maintain on its licensed premises all written agreements and detailed records of all transactions with any display service *[or advertising promoter]* for a period of three years.

(a)

DIVISION OF MOTOR VEHICLES

Driver Control Service
Administrative Hearing

Adopted Amendments: N.J.A.C. 13:19-1.2, 1.3, 1.5, 1.6, 1.7, 1.8 and 1.13
Adopted Repeals: N.J.A.C. 13:19-1.4, 1.9, 1.10, 1.11 and 1.12

Proposed: December 19, 1983 at 15 N.J.R. 2143(a).
Adopted: March 23, 1984 by Clifford W. Snedeker, Director of the Division of Motor Vehicles.
Filed: March 28, 1984 as R.1984 d.129, **without change**.

Authority: N.J.S.A. 39:5-30 and N.J.S.A. 52:14B-1 et seq.

Effective Date: April 16, 1984.
Expiration Date pursuant to Executive Order No. 66(1978): April 16, 1989.

Summary of Public Comments and Agency Responses: **No comments received.**

Full text of the adoption follows.

13:19-1.2 Requests for hearings

(a)-(c) (No change.)

(d) Upon request for a hearing pursuant to this section, the Director may require the licensee to attend a prehearing conference conducted by designated employees of the Division.

You're viewing an archived copy from the New Jersey State Library.

(e) Where the Director does not require a prehearing conference, the matter shall be transmitted directly to the Office of Administrative Law pursuant to N.J.A.C. 1:1.

13:19-1.3 Notification of prehearing conference date

In cases where a prehearing conference is required, upon receipt of a request for a hearing, the Division shall notify the licensee of the date, time and place of the prehearing conference.

13:19-1.4 (Reserved)

13:19-1.5 Adjournments; Failure to appear

(a) No prehearing conference shall be adjourned from the scheduled prehearing conference date except for good cause and upon order of the Director or an employee designated by the Director. All requests for adjournment must be made in writing, with the reasons specified therein, not later than seven days before the date scheduled for the prehearing conference. All requests shall be sent to the following address:

Division of Motor Vehicles
Bureau of Suspensions and Restorations
25 South Montgomery Street
Trenton, New Jersey 08625
Attention: Prehearing Conference
Scheduling Unit

(b) No request shall be granted for an adjournment unless good cause is shown.

(c) No request shall be granted for the adjournment of a prehearing conference that is made after the time as provided in (a) above unless the licensee can show good cause and upon order of the Director or an employee designated by the Director.

(d) In the event a licensee fails to attend a prehearing conference wherein an adjournment has not been granted, the proposed action against the licensee shall be taken without further opportunity for a prehearing conference and the licensee shall be deemed to have abandoned his request for a hearing.

13:19-1.6 Representation by counsel

(a) At a prehearing conference before the Division, the licensee may be represented by a licensed New Jersey attorney at law, or may appear on his own behalf.

(b) No licensee, after having elected to represent himself at a prehearing conference, shall be granted another prehearing conference on the grounds that he lacked representation by counsel. Nor shall any licensee be entitled to another prehearing conference upon any claim of inadequacy of representation by counsel at a prehearing conference.

13:19-1.7 Driver improvement specialist

(a) The prehearing conference shall be conducted by the Director or by such departmental employee as the Director may designate.

(b) The person conducting such prehearing conference shall be referred to as a driver improvement specialist.

13:19-1.8 Prehearing conference; purpose; conduct; report; transmittal to the Office of Administrative Law

(a) The purpose of the prehearing conference is to attempt to reach a settlement in order to dispose of the proposed suspension action in a manner that is satisfactory to both sides. If a settlement is not reached, the parties shall use the prehearing conference to prepare the issues and evidence for the hearing.

(b) The driver improvement specialist responsible for conducting the prehearing conference shall conduct an informal conference with the licensee and the licensee's attorney, if he is represented by an attorney, for the purpose of reaching a settlement. The driver improvement specialist shall produce any relevant materials the Division may have which relate to the proposed suspension action and the licensee shall be permitted to produce any document or other evidence which relates to the proposed suspension action.

(c) The driver improvement specialist shall prepare a conference report for each prehearing conference. The conference report shall contain information relevant to the proposed suspension. If a settlement is reached between the Division and the licensee, the licensee shall sign the conference report indicating that both parties agreed to be bound by the terms of the settlement contained therein. If a licensee accepts the settlement, the licensee is deemed to have abandoned any further right to a hearing.

(d) If the parties cannot agree as to a settlement, then the conference report shall so indicate. Where the parties cannot reach an agreement, the matter shall be transmitted to the Office of Administrative Law for a hearing pursuant to N.J.A.C. 1:1.

13:19-1.9 (Reserved)

13:19-1.10 (Reserved)

13:19-1.11 (Reserved)

13:19-1.12 (Reserved)

13:19-1.13 Procedure as to when opportunities to be heard are granted

(a) The Division shall not take administrative action against a person unless it has first afforded the person an opportunity for a hearing in conformity with these provisions except as set forth in (b), (c), and (d) below.

(b) When the administrative action proposed by the Division against any person is one wherein the Division has authority to act without first providing an opportunity for a hearing, such action shall be valid, but the Division shall promptly afford the person an opportunity to be heard in conformity with the provision of this regulation.

(c) No hearing shall be provided when the action taken by the Division is required by any law which prescribes a suspension or revocation of a license or a privilege and which requires no exercise of discretion on the part of the Division of Motor Vehicles. No hearing shall be provided when a suspension or revocation of a license or privilege is suspended or revoked by order of a court of competent jurisdiction.

(d) When a license is not suspended or is restored with the distinct understanding that any subsequent moving violation will be cause for a summary suspension, the issue of any hearing requested with respect to a proposed suspension for such subsequent moving violation will be limited to:

1. Whether or not the licensee has been convicted of a subsequent moving violation; and

2. Determining whether or not the licensee received adequate notice that his license had been restored with that distinct understanding.

You're viewing an archived copy from the New Jersey State Library.

(a)

DIVISION OF MOTOR VEHICLES

Driver Control Service
Point System and Driving During Suspension

Readoption: N.J.A.C. 13:19-10

Proposed: February 21, 1984 at 16 N.J.R. 347(a).
Adopted: March 27, 1984 by Clifford W. Snedeker, Director of the Division of Motor Vehicles.
Filed: March 28, 1984 as R.1984 d.128, **without change.**

Authority: N.J.S.A. 39:5-30, 39:5-30.5 and 39:4-14.3q.

Expiration Date pursuant to Executive Order No. 66(1978): March 27, 1989.

Summary of Public Comments and Agency Responses: **No comments received.**

Full text of the readoption appears in the New Jersey Administrative Code at N.J.A.C. 13:19-10, as amended in the New Jersey Register.

(b)

BOARD OF MEDICAL EXAMINERS
DIVISION OF CONSUMER AFFAIRS

Limited Privileges and Conditions of Practice Permitted for a Graduate Physician Pending Licensure

Adopted New Rule: N.J.A.C. 13:35-2.13

Proposed: February 6, 1984 at 16 N.J.R. 216(a).
Adopted: March 23, 1984 by State Board of Medical Examiners, Edwin H. Albano, M.D., President.
Filed: April 2, 1984 as R.1984 d.138 **with substantive changes** not requiring additional public notice and comment (see N.J.A.C. 1:30-3.5).

Authority: N.J.S.A. 45:9-2.

Effective Date: April 16, 1984.
Expiration Date pursuant to Executive Order No. 66(1978): August 1, 1988.

Summary of Public Comments and Agency Responses:

On March 14, 1984 Edwin H. Albano, M.D., President of the New Jersey State Board of Medical Examiners in the Division of Consumer Affairs in the Department of Law and Public Safety pursuant to the authority of N.J.S.A. 45:9-2 and in accordance with the application provisions of the Administrative Procedure Act, adopted, with changes from the regulation as originally proposed and as set forth in 16 N.J.R. 216 not deemed to require republication, the text of N.J.A.C. 13:35-2.13 permitting limited privileges and conditions of practice for a graduate physician pending licensure, with minor changes describing the status of medical schools whose graduates are the subject of the rule and clarifying the nature of the fee required to take the FLEX examination. That is, the medical schools will be described as recognized by the Board rather than "approved" by the Board in section (a) and (b), and the applicant will be paying only the fee needed for the taking of the FLEX examination itself, rather than the larger fee required for application for full licensure in this State.

Only two comments were received. The president of the University of Medicine and Dentistry was in favor of the rule. A letter submitted on behalf of the Committee of Interns and Residents addressed several issues to the attention of the Board, and appeared to be in favor of the rule. In light of the absence of objections, and the Board's belief that the rule properly addresses several issues of concern to licensees and potential licensees, the rule is adopted, to be effective upon publication.

Full text of the adoption follows (additions to the proposal shown in boldface with asterisks ***thus***; deletions from the proposed shown in brackets with asterisks *[thus]*).

13:35-2.13 Limited privileges and conditions of practice permitted for a graduate physician pending licensure

(a) Persons who are graduates of medical schools *[approved] **recognized** by the Board may commence a period of supervised post-graduate training in a licensed hospital in this State immediately upon graduation. A training period commencing prior to the formal start of an L.C.M.E. or A.O.A.-approved post-graduate year term shall not exceed six months and shall be documented in the hospital records.

(b) Persons who are graduates of foreign medical schools *[approved] **recognized*** by the Board but who are not yet deemed eligible for licensure in this State because of the requirements of N.J.S.A. 45:9-8 and N.J.A.C. 13:35-3.11 may sit for the FLEX upon completion of one year of approved post-graduate training and satisfaction of all other requirements of N.J.S.A. 45:9-1 et seq., including payment of the application fee for *[licensure] **the FLEX examination***.

1. The Board shall issue to a person passing the FLEX in this circumstance a Certificate which shall state that the person named on the Certificate has applied for licensure in this State, has received a passing grade on the FLEX, and may engage in the practice of medicine and surgery in a formal, supervised training program approved by the Board.

2. The holder of said Certificate may issue medical orders for treatment and for medication only under supervision and only for patients in the licensed hospital in which the physician is receiving post-graduate training.

3. The Certificate shall expire four years from the date of issuance or upon receipt of full licensure, whichever is earlier.

You're viewing an archived copy from the New Jersey State Library.

(a)

BOARD OF MEDICAL EXAMINERS

Advertising and Solicitation Practices

Adopted Repeal: N.J.A.C. 13:35-6.10
Adopted New Rule: N.J.A.C. 13:35-6.10

Proposed: January 3, 1984 at 16 N.J.R. 32(a).
Adopted: March 15, 1984 by Board of Medical Examiners, Edwin H. Albano, M.D., President.
Filed: April 2, 1984 as R.1984 d.139, **with substantive and technical changes** not requiring additional public notice and comment (see N.J.A.C. 1:30-3.5).

Authority: N.J.S.A. 45:9-2

Effective Date: April 16, 1984.
Expiration Date pursuant to Executive Order No. 66 (1978): August, 1988.

Summary of Public Comments and Agency Responses:

On March 14, 1984, pursuant to the authority of N.J.S.A. 45:9-2, the Board of Medical Examiners repealed the former text of N.J.A.C. 13:35-6.10 regulating advertising and solicitation practices of licensees of the Board of Medical Examiners, and in accordance with the applicable provisions of the Administrative Procedure Act, the Board adopted in its place under the same citation the text proposed and published at 16 N.J.R. 32 on January 3, 1984, with changes not in violation of N.J.A.C. 1:30-3.5. Further, the Board voted to alert readers in the published notice of adoption that a new provision restrictive of certain styles of advertising in public media will be proposed in the next available Register (that is, a provision prohibiting drawings, animations, clinical photographs, dramatizations, music or lyrics in radio or television advertisements) which will be added to the present adopted text as new section (m).

The other changes, deemed not to require republication, are the following: grammatical correction to N.J.A.C. 13:35-6.10 (d) and (1) to make clear that the paragraph pertained to the Board of Medical Examiners, and a spelling correction in f(2). N.J.A.C. 13:35-6.10(e) is modified in response to public comments to make clear that traditional community-based informational services such as Welcome Wagon may continue to include announcements and information or literature from licensees. Also, new wording was adopted for N.J.A.C. 13:35-6.10(h) based upon the suggestion of New Jersey Bell Telephone which advised that the proposed wording would result in considerable expense to Board licensees in advertising media such as telephone yellow pages; the Board determined that, while all licensees must be identified on professional stationery and at the office location, advertisements intended for off-premises display or circulation need list only the professional service corporation or trade name along with nature of practice, address or telephone number, and the name of at least one of the practicing licensees. The Board's responses to other public comments is set forth in a committee report which was reviewed and adopted by the Board on March 14. The report is available for public inspection. The Board's determination to continue to prohibit the advertising of "free services" or the substantial equivalent of free services (for example, "$5.00 examination") was, as noted in the report, supported by testimony presented at the public hearing conducted on October 6, 1983. Not only did respected and credible witnesses speak on the high abuse potential of "free service" advertising done within the confines of a physician's office, but those speaking in favor of it described the very effects that the Board had feared as in fact happening in office settings where certain practitioners were inducing the public to come in with an offer of "free examination."

Full text of the adoption follows (additions to the proposal shown in boldface with asterisks ***thus***; deletions from the proposal shown in brackets with asterisks *[thus]*).

13:35-6.10 Advertising and solicitation practices

(a) Definitions: The following words and terms when used in this section shall have the following meanings unless the context clearly indicate otherwise.

1. The term "advertisement" shall mean any attempt directly or indirectly by publication, dissemination, or circulation in print or electronic media which directly or indirectly induces or attempts to induce any person or entity to purchase or enter into an agreement to purchaser services, treatment, or goods related thereto from a Board licensee.

2. "Board licensee" shall mean any individual holding a license issued by the State Board of Medical Examiners.

3. The term "routine professional service" shall refer to a service which a board licensee or professional association routinely performs.

4. The term "print media" shall include newspapers, magazines, periodicals, professional journals, telephone directories, circulars, handbills, flyers, billboards, signs, matchcovers and other similar items, documents or comparable publications, the content of which is disseminated by means of the printed word. The term shall not include aerial displays.

5. The term "electronic media" shall include radio and television, but shall not include communications made by sound equipment from a motor vehicle.

6. The term "range of fees" shall refer to an expressly stated upper and lower limit on the fees charged for services or goods offered by a Board licensee.

(b) A Board licensee may provide information to the public by advertising in print or electronic media.

(c) A Board licensee who engages in the use of advertising which contains any of the following shall be deemed to be engaged in professional misconduct:

1. Any statement, claim or format which is false, fraudulent, misleading or deceptive;

2. Any misrepresentation of a material fact;

3. The suppression, omission or concealment of any material fact under circumstances which a Board licensee knows or should know that the omission is improper or prohibits a prospective patient from making a full and informed judgment on the basis of the information set forth in the advertisement;

4. Any claim that the service performed or the materials used are superior to that which is ordinarily performed or used in the profession;

5. Any promotion of a professional service which the Board licensee knows or should know is beyond the licensee's ability to perform;

You're viewing an archived copy from the New Jersey State Library.

6. A technique or communication which appears to intimidate, exert undue pressure or to unduly influence a prospective patient or consumer;

7. Any personal testimonial attesting to the quality or competence of a service or treatment offered by a licensee;

8. The communication of any fact, data or information which may personally identify a patient;

9. An offer to pay, give or accept a fee or other consideration to or from a third party for the referral of a patient;

10. Any print, language or format which directly or indirectly obscures a material fact:

11. Any statement offering gratuitous services or the substantial equivalent thereof, provided, however, nothing herein contained shall be deemed to prohibit the rendering by a Board licensee of professional services for which no fee is charged.

(d) *[A] **The*** licensing board may require a licensee to substantiate the truthfulness of any assertion or representation set forth in an advertisement. Failure of a Board licensee to provide factual substantiation to support a representation or assertion shall be deemed professional misconduct.

(e) A Board licensee shall not engage either directly or through the use of any agent, employee or representative in in-person solicitation with a prospective patient or consumer. This subsection shall not prohibit ***a licensee from offering services through materials provided to a community service organization which makes known the availability of all professional services desiring to be listed; nor shall it prohibit*** the offering of services by a Board licensee to any bona fide representative of prospective patients including, but not limited to employers, labor union representatives, or insurance carriers.

(f) Advertising making reference to or setting forth a fee shall be limited to that which contains a fixed or a stated range of fees for specifically described routine professional services or goods offered by licensees.

1. A Board licensee who advertises fees shall disclose all relevant and material variables and considerations which are ordinarily included in such a service so that the fee will be clearly understood by prospective patients or consumers.

2. In the absence of such disclosure referred to in (f)1 above, the stated fees shall be presumed to include everything ordinarily required for such a service. No additional charges shall be made for an advertised service unless the advertisement includes a specific delineation of additional services contemplated in the fee to be charged therefore.

(g) Offers of discounts or fee reductions shall state a bona fide fee or range of fees against which such discounts are to be made.

(h) *[All Board licensee advertisements and public representations shall contain the name and address or telephone number of the Board licensee, professional service corporation or trade name under which the practice is conducted and shall also set forth the names of all licensees who are principals, partners, or officers in the firm or entity identified in the advertisement and the nature of the professional practice.] **The name and nature of professional practice of every licensee practicing independently or as an employee of another licensee or of a professional service corporation shall appear on professional stationery and shall be conspicuously displayed and kept at the entrance of the place where the licensed practice is conducted.***

(i) The responsibility for the form and content of any advertisement offering services or goods by a Board licensee shall be jointly and severally that of each Board licensee who is a principal, partner or officer of the firm or entity identified in the advertisement.

(j) The time period during which an advertised fee will remain in effect shall be set forth on the face of the advertisement. In the absence of such disclosure, the effective period shall be deemed to be 30 days from the date of the advertisement's *[initial] **final*** publication.

(k) A video or audio tape of every advertisement communicated by electronic media shall be retained by the Board licensee and shall be made available for review upon request by the Board or its designee. A copy of any advertisement appearing in the print media shall also be retained by the licensee and made available for review. The tapes and print media copies required to be retained by this subsection, shall be kept for a period of three years from the date of the last authorized publication or dissemination of the advertisement.

(l) All Board licensee advertisements and public representations intended to be displayed or circulated away from the office premises shall contain the name and address or name and telephone number of the Board licensee or the professional service corporation or trade name under which the practice is conducted and the nature of the professional practice. All such advertisements, including telephone directory advertisements may, if desired, list only the professional service corporation or trade name but must disclose the nature of the practice, and address or telephone number, and the name of at least one of the principal practitioners.

(m) (Reserved)

*[l]**(n)*** Nothing contained in this section shall be construed to prohibit *[a] **the*** licensing board from adopting additional regulations concerning advertising by Board licensees. To the extent that any conflict or inconsistency may arise between the provisions of this section and any subsequently adopted rule dealing more specifically with the same subject matter as set forth, such subsequent adopted rule shall control.

(a)

STATE BOARD OF NURSING

Licensure by Examination and Endorsement; Foreign Nurses; Nursing Procedures

Adopted Amendments: N.J.A.C. 13:37-2 through 6
Adopted Repeal: N.J.A.C. 13:37-9, 10 and 11

Proposed: November 7, 1983 at 15 N.J.R. 1850(a).
Adopted: February 3, 1984, Kathleen M. Dirschell, President, New Jersey State Board of Nursing.
Filed: April 2, 1984 as R.1984 d.137, **with substantive and technical changes** not requiring additional public notice and comment (see N.J.A.C. 1:30-3.5).

Authority: N.J.S.A. 45:11-23, 45:11-24(d) (8) and (19), 45:11-26 and 45:11-27.

You're viewing an archived copy from the New Jersey State Library.

Effective Date: April 16, 1984.
Expiration Date pursuant to Executive Order No. 66(1978): Subchapters 2, 5, and 6 expire April 16, 1989. Subchapter 3 expires November 27, 1984; Subchapter 4 expires September 25, 1985.

Summary of Public Comments and Agency Responses: **No comments received.**

N.J.A.C. 13:37-2.1 has been changed to require registered nursing applicants to submit their final record as proof of successful completion of the nursing course. This is not a change in existing policy or practice and is consistent with the requirements on licensed practical nursing applicants. For this reason, it is not a substantive change requiring additional notice and comment. The change in wording made in N.J.A.C. 13:37-4.5 is not a substantive change requiring additional notice and comment. The added words only serve to clarify the current practice and does not change current policy in any way. The changes in N.J.A.C. 13:37-4.6 are not substantive changes requiring additional notice and comment. The change requires all foreign candidates to take the "CGFNS" exam before being granted a permission to work letter. The changes made in N.J.A.C. 13:37-5.4 and 6.1 are technical changes which clarify the meaning of the sections.

Full text of the adoption follows (additions to the proposal indicated in boldface with asterisks ***thus***; deletions from the proposal indicated in brackets with asterisks *[thus]*).

SUBCHAPTER 2. LICENSURE BY EXAMINATION FOR PROFESSIONAL NURSES

13:37-2.1 Educational requirements
(a) Applicants who entered schools of nursing on and after June 22, 1938 shall have completed a course of at least three calendar years duration.
(b) Applicants who entered schools of nursing on and after June 11, 1947 shall have completed the course of study required at such school meeting the requirements of N.J.A.C. 13:37-1.6.

13:37-2.2 Nature of examinations
The examination shall be the licensing examination approved by the New Jersey State Board of Nursing.

13:37-2.3 Examinations; temporary work permits
(a) An individual who has met all of the qualifications of a registered nurse shall be required to apply for and pass the licensing examination in order to receive a license to practice nursing in the State.
(b) An individual who has submitted an application to take the first licensing examination scheduled by the Board following completion of an approved course of study in nursing shall be issued a temporary work permit enabling such person to work as a graduate nurse in hospitals, institutions and agencies approved by the Board for this purpose, pending the results of the first licensing examination.
(c) If an individual passes the licensing examination, the temporary work permit shall be extended until such time as the Board issues a plenary license.
(d) If an individual fails to pass the licensing examination, such person shall be required to forthwith surrender the temporary work permit to the Board and refrain from further practice as a graduate nurse.
(e) An individual who is unable to apply for or take the first scheduled licensing examination following completion of an approved course of study in nursing may receive permission to work as a graduate nurse upon a showing of good cause, such as illness or emergency, timely made to the Board.
(f) If an individual fails to pass three consecutive licensing examinations, such person shall be required to submit to the Board proof of having completed recognized remediation in the areas of need before applying to take a fourth examination.

13:37-2.4 Passing score on examination
The passing score on the examination shall be determined and reviewed annually by the Board.

SUBCHAPTER 3. EXAMINATION FOR PRACTICAL NURSES

13:37-3.1 Education requirements
Applicants shall have completed 10th grade education or the equivalent and meet the requirements of N.J.A.C. 13:37-3.2.

13:37-3.2 Nursing school course
(a) Applicants shall have completed a course of at least 44 weeks in length, excluding vacations and holidays, as prescribed by N.J.A.C. 13:37-8.4 (course of study), in an approved school of practical nursing. Applicants shall submit their final record as proof of successful completion of the nursing course.
(b) Applicants who are not graduates of an approved school of practical nursing shall be eligible for admission to the examination, provided they submit evidence of having completed an approved professional nursing program.

13:37-3.3 Nature of examination
The examination shall be the licensing examination approved by the State Board of Nursing.

13:37-3.4 Passing examination score
The passing score on the examination shall be determined by the State Board and reviewed annually.

13:37-3.5 Examinations; temporary work permits
(a) An individual who has met all of the qualifications of a licensed practical nurse shall be required to apply for and pass the licensing examination in order to receive a license to practice nursing in the State.
(b) An individual who has submitted an application to take the first licensing examination scheduled by the Board following completion of an approved course of study in nursing shall be issued a temporary work permit enabling such person to work as a graduate nurse in hospitals, institutions and agencies approved by the Board for this purpose, pending the results of the first licensing examination.
(c) If an individual passes the licensing examination, the temporary work permit shall be extended until such time as the Board issues a plenary license.
(d) If an individual fails to pass the licensing examination, such person shall be required to forthwith surrender the temporary work permit to the Board and refrain from further practice as a graduate nurse.
(e) An individual who is unable to apply for the first scheduled licensing examination following completion of an approved course of study in nursing may receive permission to

You're viewing an archived copy from the New Jersey State Library.

work as a graduate nurse upon a showing of good cause, such as illness or emergency, timely made to the Board.

(f) If an individual fails to pass three consecutive licensing examinations, such person shall be required to submit to the Board proof of having completed recognized remediation in the areas of need before applying to take a fourth examination.

13:37-3.6 Waiver; practical nurse; license by examination

(a) A practical nurse licensed in this State by waiver pursuant to N.J.S.A. 45:11-27(b)(3) shall be permitted to apply for a license to practice practical nursing by examination and shall be granted said license provided that the applicant:

1. Fulfills the requirements as stated in N.J.S.A. 45:11-27(a) 1 and 2;

2. Has satisfactory experience in practical nursing for a period of not less than five years within the past ten years.

3. Successfully completes the examination for practical nurses as approved by the Board.

SUBCHAPTER 4. FOREIGN NURSES

13:37-4.1 Initial inquiry

(a) Professional nurse: Upon receipt of an initial inquiry from a foreign nurse applicant, the applicant shall be required to submit an information form. If the applicant appears to satisfy the requirements for licensure, the applicant shall be required to submit:

1. Official application accompanied by the required fee (fee not refundable);

2. A verification of licensure or registration in the foreign country or in the event such verification is unavailable, proof that the applicant is a graduate of an approved school of professional nursing;

3. Student final record or an equivalent school of nursing record, or in the event such record is unavailable, proof that the applicant is a graduate of an approved school of professional nursing;

4. Evidence of completion of four years of high school or the equivalent.

(b) Practical nurse: Upon receipt of an initial inquiry from a foreign nurse applicant, the applicant shall be required to submit an information form. If the applicant appears to satisfy the requirements for licensure, the applicant shall be required to submit:

1. Official application, accompanied by the required fee (fee not refundable);

2. Verification of licensure or registration in the foreign country or in the event such verification is unavailable, proof that the applicant is a graduate of an approved school of practical nursing;

3. Student final record or the equivalent, or in the event such record is unavailable, proof that the applicant is a graduate of an approved school of practical nursing;

4. Evidence of having completed two years of secondary school in the country of nursing education or the equivalent.

13:37-4.2 Eligibility letter

Upon being satisfied that the applicant is eligible for licensing as a professional nurse or practical nurse in this State, the Board will furnish the applicant with an eligibility letter to be used for immigration purposes.

13:37-4.3 Deficiencies

Prior to being examined for registration, applicants deficient in medical, surgical, pediatric, obstetric or psychiatric nursing shall complete an accredited course in an approved school of professional nursing in the areas of deficiency.

13:37-4.4 Examinations; temporary work permits

(a) An individual who has met all of the qualifications of a nurse shall be required to apply for and pass the licensing examination in order to receive a license to practice nursing.

(b) An individual who has submitted an application to take the first licensing examination scheduled by the Board following completion of an approved course of study in nursing and arrival in this country shall be issued a temporary work permit ***if eligible*** enabling such person to work as a graduate nurse in hospitals, institutions, and agencies approved by the Board for this purpose, pending the results of the first licensing examination.

(c) If an individual passes the licensing examination, the temporary work permit shall be extended until such time as the Board issues a plenary license.

(d) If an individual fails to pass the licensing examination, such person shall be required to forthwith surrender the temporary work permit to the Board and refrain from further practice as a graduate nurse.

(e) An individual who is unable to apply for the first scheduled licensing examination following completion of an approved course of study in nursing and arrival in this country may receive permission to work as a graduate nurse upon a showing of good cause, such as illness or emergency, timely made to the Board.

(f) If an individual fails to pass three consecutive licensing examinations, such person shall be required to submit to the Board proof of having completed recognized remediation in the areas of need before applying to take a fourth examination.

13:37-4.5 Employment prior to licensure

[a] The Board may issue a permission to work letter ***if eligible*** pending examination; provided, however, that the applicant shall have furnished the Board with either an alien registration number, visa classification number or letter from the United States Immigration Service permitting such employment.

13:37-4.6 Language comprehensive requirement

[a] All foreign nurses candidates ([from non-English speaking countries or countries wherein the primary language is other than English, prior to being granted a permission to work letter as a nurse in this State]* ***prior to taking the examination*** shall submit to the Board a certificate from the Commission on Graduates of Foreign Nursing Schools*.* *[or evidence that they have successfully completed the Test of English (TOEFL) Examination with a minimum score acceptable to the Board and determined annually.]*

SUBCHAPTER 5. LICENSURE BY ENDORSEMENT

13:37-5.1 Initial inquiry

(a) Professional nurse: Upon receipt of an initial inquiry from an applicant who has been licensed by examination or original waiver in another state, the applicant shall be required to submit:

1. License to practice professional nursing;

2. Official application for licensure by endorsement;

3. Verification of licensure in another state to be completed by the state board in the state of licensure;

You're viewing an archived copy from the New Jersey State Library.

4. Foreign nurse graduates shall submit proof of completion of the equivalent in high school and school of nursing record.

(b) Practical nurse: Upon receipt of an initial inquiry from an applicant who has been licensed by examination or original waiver in another state, the applicant shall be required to submit:

1. License to practice practical nursing;
2. Official application for licensure by endorsement;
3. Verification of licensure in another state to be completed by the state board in the state of licensure. In the event such form is incomplete concerning high school, the applicant shall be required to provide proof of completion of at least 10th grade in high school.

13:37-5.2 Evaluation of credentials

Applicants having the educational requirements and passing scores in their State Board Examinations equal to those required in this State at the time of their graduation from an approved nursing program or school may be licensed by endorsement.

13:37-5.3 Deficiencies

(a) Applicants not meeting the high school requirements shall be required to pass the General Educational Development Test or the equivalent.

(b) Applicants not meeting the requirements as defined in N.J.A.C. 13:37-1.6 or 13:37-8.4 shall be required to eliminate any deficiencies in an accredited program of nursing as well as pass the licensing examination approved by the Board of Nursing.

13:37-5.4 Passing score

(a) Professional nurse applicants shall have the following scores:

1. Applicants licensed in their state of licensure prior to March 1954 shall be required to have attained the passing score required in their state of licensure.
2. Applicants licensed in their state of licensure on and after March 1954 and prior to July 1982 shall be required to have attained in all subjects in the State Board Test Pool Examination the scores required of applicants for licensure by examination*[.]* ***in this State.***
3. Applicants licensed in their state of licensure after July 1982 shall be required to have attained the score required for all applicants for licensure by the licensing examination approved by the Board of Nursing.
4. Applicants not having the passing score required by New Jersey Board of Nursing shall be required to retake the examination.

(b) Practical nurse applicants shall the following scores:

1. Applicants licensed in their state of licensure prior to January 1, 1949, shall be required to have attained the passing score required in the state of licensure.
2. Applicants licensed between January 1, 1949 and December 31, 1960 shall be required to have received a score of 350; applicants licensed after January 1, 1961, a score of 375 on the State Board Test Pool Examination and applicants licensed after October 1982, a score of 350 on NCLEX-PN, except that where the state of licensure did not utilize such examination at the time of licensure, that applicant shall be required to have attained the passing score on the examination conducted by the state of licensure having previously availed itself of the State Board Test Pool Examination or NCLEX-PN was not using such examination at the time of licensure, the applicant shall be required to retake such examination.

13:37-5.5 Employment prior to licensure

Upon the applicant's exhibiting to the Board a license to practice nursing in another state and filing with the Board the official application for licensure by endorsement, the Board may issue a permission to work letter granting permission to be employed as a nurse pending the Board's evaluation of such application and the verification by the Board of licensure in another state.

SUBCHAPTER 6. NURSING PROCEDURES

13:37-6.1 Nursing procedures

Nursing procedures shall be determined by the Nursing Practice Act of *[the]* ***this*** State*, *[which, are]* subject to ***the*** interpretation and revision by the Board of Nursing.

SUBCHAPTERS 9.-11. (RESERVED)

TREASURY-TAXATION

(a)

DIVISION OF TAXATION

Cigarette Tax

Readoption: N.J.A.C. 18:5

Proposed: February 6, 1984 at 16 N.J.R. 228(a).
Adopted: March 16, 1984 by John R. Baldwin, Director, Division of Taxation.
Filed: March 19, 1984 as R.1984 d.94, **without change.**

Authority: N.J.S.A. 54:40A-20.

Expiration Date pursuant to Executive Order No. 66(1978): March 19, 1989.

Summary of Public Comments and Agency Responses: **No comments received.**

Full text of the readoption may be found in the New Jersey Administrative Code at N.J.A.C. 18:5 as amended in the New Jersey Register.

(b)

DIVISION OF TAXATION

Local Property Tax
Farmland Assessment

Adopted Amendment: N.J.A.C. 18:15-2

Proposed: December 19, 1984 at 15 N.J.R. 2152(a).
Adopted: March 26, 1984 by John R. Baldwin, Director, Division of Taxation.
Filed: March 27, 1984 as R.1984 d.125, **without change.**

Authority: N.J.S.A. 54:4-23.1 et seq., specifically 54:4-23.21.

You're viewing an archived copy from the New Jersey State Library.

Effective Date: April 16, 1984.
Expiration Date pursuant to Executive Order No. 66(1978): August 12, 1988.

Summary of Public Comments and Agency Responses: **No comments received.**

Full text of the adoption follows.

18:15-2.1 Persons required to file
In order that land is agricultural or horticultural use may be assessed under the act, the owner of such land must file an application and supplemental form requesting such assessment with the assessor of the taxing district in which such land is situated on or before August 1 of the pre-tax year.

18:15-2.2 Forms FA-1 and FA-1S, required
Application for assessment under the act may be made only upon completion of the forms prescribed by the Director, identified as Form FA-1 and FA-1S. Copies of the forms may be obtained, upon request, from the assessor of each taxing district who is required to provide such forms for use by applicants.

18:15-2.3 Form FA-2 and FA-1S, signature and verification
The application, Form FA-1 and supplemental Form FA-1S are to be filed by the owner of the land at the time the application for farmland assessment is made. In the case of multiple ownership, (except corporate co-owners), one of the owners may sign on behalf of the other co-owners, and such signer will be presumed to have authority to sign on behalf of the other owners. In the case of a corporate owner or owners the full name of the corporation must be filled in, and accompanied by the signature and title of the corporate officer authorized to sign the application on its behalf.

18:15-2.4 Annual filing required
In order that land in horticultural or agricultural use continue to be assessed as farmland, the owner thereof must annually, on or before August 1 of the pre-tax year, complete and file Forms FA-1 and FA-1S with the assessor of the taxing district where such land is situated. See Form FA-1, revised March, 1974 and Form FA-1S, October 1983.

18:15-2.5 Extension of time for filing
The owner of land in horticultural or agricultural use may file the Application and Supporting Farm Information forms after August 1, but before December 31 of the pre-tax year if the taxing district in which the land is located completes a revaluation of all property in time to be reflected in the assessments for the next succeeding tax year.

18:15-2.6 Application forms; original and duplicate
(a) The original copy of all FA-1 and FA-1S forms submitted to the assessor shall be retained in the office of the assessor.
(b) The duplicate copy of each form shall be forwarded to the Local Property and Public Utility Branch by the assessor on or before November 10 of the pre-tax year.
(c) Copies of forms submitted to the assessor after August 1, but before December 31, under the provision for the extension of time to file shall be forwarded to the Local Property and Public Utility Branch by the assessor on or before January 10 of the year in which a revaluation becomes effective.
(d) Each duplicate copy of the application form shall, in the space reserved for official use, be signed and dated by the assessor and be marked "approved" or "disapproved."

(a)

DIVISION OF TAXATION

Motor Fuels Taxes

Readoption: N.J.A.C. 18:18

Proposed: February 21, 1984 at 16 N.J.R. 358(b).
Adopted: April 2, 1984 by John R. Baldwin, Director, Division of Taxation.
Filed: April 2, 1984 as R.1984 d.142, **without change.**

Authority: N.J.S.A. 54:39-10 and 54:50-1.

Effective Date: April 2, 1984.
Expiration Date pursuant to Executive Order No. 66 (1978): April 2, 1989.

Summary of Public Comments and Agency Responses: **No comments received.**

Full text of the readoption appears in the New Jersey Administrative Code at N.J.A.C. 18:18, as amended in the New Jersey Register.

(b)

DIVISION OF TAXATION

Sales and Use Tax
Motor Vehicles: Taxable and Exempt Services

Adopted Amendments: N.J.A.C. 18:24-7.12

Proposed: February 6, 1984 at 16 N.J.R. 235(a).
Adopted: March 26, 1984 by John R. Baldwin, Director, Division of Taxation.
Filed: March 27, 1984 as R.1984 d.126, **without change.**

Authority: N.J.S.A. 54:32B-24.

Effective Date: April 16, 1984.
Expiration Date pursuant to Executive Order No. 66(1978): August 12, 1988.

Summary of Public Comments and Agency Responses: **No comments received.**

You're viewing an archived copy from the New Jersey State Library.

Full text of the adoption follows.

18:24-7.12 Taxable and exempt services
(a)-(d) (No change.)
(e) A separately stated and identified charge for a motor vehicle inspection by an official inspection station to obtain an approval sticker as provided under N.J.S.A. 39:8-1, et seq. is exempt from tax. The charge for any repairs or adjustments required to obtain an approval sticker for a motor vehicle as a result of an inspection rejection is subject to tax as provided in (a) above.

OTHER AGENCIES

(a)

CASINO CONTROL COMMISSION

Accounting and Internal Controls
Standard Financial and Statistical Reports

Adopted Amendment: N.J.A.C. 19:45-1.6

Proposed: February 21, 1984 at 16 N.J.R. 361(a).
Adopted: March 28, 1984 by Walter N. Read, Chairman, Casino Control Commission.
Filed: March 30, 1984 as R.1984 d.135, **without change**.

Authority: N.J.S.A. 5:12-63(c), 5:12-69(a) and 5:12-70(l)(m)(n).

Effective Date: April 16, 1984.
Expiration Date pursuant to Executive Order No. 66(1978): April 7, 1988.

Summary of Public Comments and Agency Responses:

Comments were received from Adamar of New Jersey. Essentially, Adamar opposes the amendment because it believes additional costs would be incurred caused by the amendment. The commission rejected this comment. Adamar is required by the present regulation to reconcile its income statements from a fiscal to a calendar basis. Amended N.J.A.C. 19:45-1.6 would require all financial statements to be preapred on a calendar basis. The Commission does not require Adamar to change its books. It could continue to maintain its books on a fiscal basis, but present the financial statements on a calendar basis. The amendment should not be overly burdensome in that it only pertains to financial statements prepared under the New Jersey reporting requirements.

Full text of the adoption follows.

19:45-1.6 Standard financial and statistical reports
(a)-(b) (No change.)
(c) Annual reports to the Commission shall be based on a calendar year, beginning January 1, and ending December 31. Quarterly reports shall be based on calendar quarters ending March 31, June 30, and September 30. Monthly reports shall be based on calendar months.
(d)-(j) (No change.)

(b)

CASINO CONTROL COMMISSION

Taxes
Section 144 Investment Obligation and Investment Alternative Tax

Adopted Amendments: N.J.A.C. 19:54-2.9, 2.27

Proposed: February 21, 1984 at 16 N.J.R. 362(a).
Adopted: March 30, 1984 by Walter N. Read, Chairman, Casino Control Commission.
Filed: March 30, 1984 as R.1984 d.136, **without change**.

Authority: N.J.S.A. 5:12-63(c), 5:12-69(a), 5:12-70(e) and 5:12-144(f).

Effective Date: April 16, 1984.
Expiration Date pursuant to Executive Order No. 66(1978); April 15, 1988.

Summary of Public Comments and Agency Responses:

Full text of the current rules may be found at 15 N.J.R. 1838(a), 16 N.J.R. 381(b).

Full text of the adoption follows.

19:54-2.9 Eligibility: Completion and operation
(a) (No change).
(b) In approving an eligibility application for a proposed project, the Commission shall establish a completion date for the construction and improvement of the investment property and shall also establish the minimum operation period during which the completed investment property must be operated in accordance with the operation conditions imposed by the Commission. The Commission may revise the completion date upon a showing of good cause.
(c)-(g) (No change.)

19:54-2.27 Allowability: Recipient obligations and suitability
(a)-(c) (No change.)
(d) In the event that a recipient fails to meet any allowability conditions imposed by the Commission for a reason which was within the control of the casino operator or any casino licensee associated therewith, the casino operator shall forfeit any credit for equity investment or cumulative investment attributable to the non-conforming amount of the contribution and shall be liable for any investment obligation which becomes unsatisfied or incurred in the same manner as provided in N.J.A.C. 19:54-2.9 for failure to fulfill completion and operation conditions of an eligible investment. For purposes of this section, the non-conforming amount of a contribution shall be the value of that portion of the contribution which is not applied or used in accordance with the allowabil-

You're viewing an archived copy from the New Jersey State Library.

ity conditions. Where a contribution is subject to conditions for a specified period, the casino operator shall be entitled to retain credit for the same percentage of the contribution value as the percentage of the specified period in which the conditions were met.

(e) (No change.)

You're viewing an archived copy from the New Jersey State Library.

EMERGENCY ADOPTIONS

ENVIRONMENTAL PROTECTION

(a)

DIVISION OF WATER RESOURCES BUREAU OF SHELLFISH CONTROL

Closure of Seasonally Approved and Approved Areas for Shell-Fish Harvesting

Adopted Emergency Rule: N.J.A.C. 7:12-1.7

Emergency New Rule Adopted: March 29, 1984 by Robert E. Hughey, Commissioner, Department of Environmental Protection

Gubernatorial Approval: (See: N.J.S.A. 52:14B-21(c)): March 29, 1984

Emergency New Rule Filed: March 30, 1984 as R.1984 d.134

Authority: N.J.S.A. 58:24-2.

Emergency New Rule Effective Date: March 30, 1984.
Emergency New Rule Expiration Date: May 29, 1984.
DEP Docket No. 017-84-03.

Summary and Statement of Imminent Peril

In order to preclude imminent peril to the public health, this emergency rule closes all State waters currently classified as approved areas or seasonally approved growing areas for direct market harvesting of shellfish. Due to prevailing weather conditions and the effect therefrom resulting in the overflow of certain sewage treatment systems, unacceptable levels of pollution of approved and seasonally approved shellfish waters may be occurring, rendering shellfish taken therefrom dangerous to the public health.

Social Impact

This emergency new rule will protect the public health by ensuring that no direct harvesting of shellfish can take place until water quality conditions conform to the required State water quality standards for shellfish harvesting.

Economic Impact

This emergency new rule will have an impact upon the shellfish harvesting industry during the effective period of this rule. However, these economic impacts are outweighed by the potentially adverse public health impacts that may result to the public resulting from the prevailing weather conditions and the water quality conditions resulting from these weather conditions.

Full text of the emergency new rule follows.

7:12-1.7 Closure of approved areas and seasonally approved areas for shellfish harvesting

(a) As a result of prevailing weather conditions and the effect therefrom on existing sewage treatment systems, the Department hereby:

1. Suspends N.J.A.C. 7:12-1.4 and 1.5 (Seasonally Approved growing waters) previously approved for direct market harvesting of shellfish. The direct market harvesting of shellfish in these waters is hereby prohibited.

2. Prohibits the direct market harvesting of shellfish in all approved area waters of the State.

(b) Upon a determination that the said waters, set forth in subsection (a) above are safe for the direct market harvesting of shellfish, the Commissioner of the Department of Environmental Protection shall rescind this emergency rule, area by area, to their prior classification upon public notice thereof, which notice shall subsequently be published in the New Jersey Register.

AGENCY NOTE: On March 29, 1984, pursuant to statutory authority granted to the Department of Environmental Protection appearing at N.J.S.A. 58:24-2, the direct market harvesting of shellfish was prohibited in all State waters previously classified as approved or seasonally approved. This action was taken by promulgation of an emergency rule appearing at N.J.A.C. 7:12-1.7. Gubernatorial concurrence of the existence of imminent peril warranting emergency adoption of said rule ws attested to on March 29, 1984, by signature of Governor Thomas H. Kean, and the emergency rule was filed with the Office of Administrative Law effective March 30, 1984.

Subsequently, on April 1, 1984, the Division of Water Resources determined that the affected waters had become safe for the direct market harvesting of shellfish. The commissioner of the Department of Environmental Protection then determined that since the imminent peril necessitating the emergency adoption no longer existed, the provisions of the emergency rule were no longer applicable. The Commissioner therefore decided not to enforce the provisions of the emergency rule and allowed the harvesting of shellfish. The Commissioner has informed interested and affected persons of his decision to allow resumption of shellfish harvesting. The provisions of the emergency adoption will therefore not be enforced.

You're viewing an archived copy from the New Jersey State Library.

(a)

DIVISION OF WASTE MANAGEMENT

Sanitary Landfills; Records

Adopted Emergency Amendment and Concurrent Proposal: N.J.A.C. 7:26-2.13

Emergency Amendment Adopted: March 16, 1984 by Robert E. Hughey, Commissioner, Department of Environmental Protection.
Gubernatorial Approval (N.J.S.A. 52:14B-4(c)): March, 1984.
Emergency Amendment Filed: April 2, 1984 as R.1984 d.148.

Authority: N.J.S.A. 13:1B-3 and 13:1E-6.

Emergency Amendment Effective Date: April 2, 1984.
Emergency Adoption Expiration Date: June 1, 1984.
DEP Docket No. 015-84.

A **public hearing** concerning this proposal will be held on April 17, 1984 at:

Labor Education Center
Rutgers University
Ryders Lane and Clifton Avenue
New Brunswick, N.J. 08903

Interested persons may submit in writing, data, views or arguments relevant to the proposal on or before April 16, 1984. These submissions, and any inquiries about submissions and responses should be addressed to:

Barbara M. Greer
Office of Regulatory Services
Department of Environmental Protection
CN 402
Trenton, N.J. 08625

This amendment was adopted on an emergency basis and became effective upon acceptance for filing by the Office of Administrative Law (see N.J.S.A. 52:14B-4(c) as implemented by N.J.A.C. 1:30-4.4). Concurrently, the provisions of this emergency rule are being proposed for readoption in compliance with the normal rulemaking requirements of the Administrative Procedure Act, N.J.S.A. 52:14B-1 et seq., upon acceptance for filing by the Office of Administrative Law (see N.J.A.C. 1:30-4.4(d)).

The concurrent proposal is known as PRN 1984-230.

The agency emergency adoption and concurrent proposal follows:

Summary

The amendment to N.J.A.C. 7:26-2.13 requires transporters of solid waste to provide sanitary landfill owner/operators with information documenting the size and nature of the load being disposed of and its origin in terms of municipality, county and State. Both the transporter and the landfill operator must sign the information document, thereby certifying the accuracy of the information. If no information is provided by the transporter or if the load is not in conformance with the waste flow rules, N.J.A.C. 7:26-6, disposal must be disallowed.

With the extremely limited available landfill capacity now remaining in New Jersey, a crisis in solid waste disposal now exists. This crisis is exacerbated by the disposal, at a number of landfills, of waste which legally has not been directed to those landfills. By establishing more stringent reporting requirements for solid waste disposal, through this amendment, the Department of Environmental Protection hopes to deter illegal disposal. In addition, the documents required by the amendment will provide an effective enforcement tool to be used against violators of the waste flow rules and the Solid Waste Management Act in general.

In order to curtail the ongoing improper disposal practices which threaten to adversely affect public health and the environment, the Department of Environmental Protection has adopted this amendment through the emergency rulemaking procedure provided for in N.J.A.C. 52:14B-4(c) as implemented by N.J.A.C. 1:30-4.4. Nothing in this amendment shall be construed to allow the disposal of waste types which are not allowable by law.

Social Impact

The public will benefit from the improved management of solid waste flow which will be provided by this amendment.

Economic Impact

There will be no significant economic impact associated with this amendment. A positive economic impact to the public may result from the additional control over waste disposal activities afforded by the amendment. A slight negative economic impact upon the facility owner/operator and transporters will result because of the increased reporting requirements.

Environmental Impact

A positive environmental impact will result from this amendment in that it will provide the State with an increased ability to deter and take enforcement action against illegal disposers of solid waste. The additional information will also promote proper solid waste management and planning by providing early identification of remaining sanitary landfill capacity. This will enable the solid waste planning districts and State additional time to plan for alternate disposal sites.

The amendment may create a slightly longer entrance time for each individual transporter which, in turn, may affect normal traffic flow around the solid waste facility. However, this negative impact is not expected to be significant since the information will be obtained during that time which is required for weighing the waste.

Full text of the adopted emergency amendment and concurrent proposal follows (additions indicated in boldface **thus**; deletions indicated in brackets [thus]).

7:26-2.13 Sanitary landfills; records

(a) Sanitary landfills shall maintain a daily record of wastes received. The record shall include:

1. Identification of the solid waste facility by name and **facility** [N.J.S.W.A.] identification number;

2. Identification of the **transporter** [collector/hauler] by the **Division of Waste Management** [Solid Waste Administration (N.J.S.W.A.)] registration number assigned;

3. The cubic yard or gallon capacity of the delivery vehicle or container for each of three categories of wastes **as follows**:

i. Solids: Wastes ID 10 through 27 received (in cubic yards);

ii. Septage: Waste ID 73 and 74 received (in gallons);

You're viewing an archived copy from the New Jersey State Library.

iii. Bulk liquid and semiliquids: Waste ID 72 received (in gallons);

4. Date and time of delivery to the facility[.];

5. The license plate number of the delivery vehicle or other identification authorized by the department[.]; and

6. The place of origin of the waste identified by municipality, county and state.

(b) The **daily** record **shall** [will] be maintained on forms provided by the department (or duplication of same), or on systems acceptable to the department, shall be kept for five years, and shall be available for inspection by representatives of the department **or the local health department** at any time **during normal working hours**. [Monthly summaries of wastes received shall be submitted to the Division of Waste Management no later than twenty days after the last day of each month.]

(c) The information required to be recorded in the daily record, as set forth in (a) above, shall be supplied by the transporter to the facilityoperator on a waste origin/waste disposal (O and D) form (or duplication of same).

1. O and D forms shall be provided by the department to each registered transporter.

2. Prior to disposing of the solid waste, the transporter shall complete the O and D form and sign it, thereby certifying the accuracy of the information provided; and

3. The facility operator shall verify that the form has been completed, that the waste may be disposed of at the facility in compliance with the waste flow rules at N.J.A.C. 7:26-6.5, and, where applicable, is in conformance with the facility's computer recording of scale data and sign the completed form.

4. The facility operator shall retain all O and D forms for a minimum of one year and shall make them available for inspection by representatives of the department or the local health department at any time during normal working hours.

5. If an O and D form is not completed and signed by the transporter for each vehicle, or if the waste disposal would not be in compliance with the waste flow rules, as required in (c)3 above, the facility operator shall deny the transporter the right to dispose of the solid waste at the facility.

(d) Monthly summaries of wastes received shall be submitted by the owner/operator of each facility to the Division of Waste Management, on forms provided by the department (or duplication of same), no later than 20 days after the last day of each month.

[(c)] **(e)** Upon approval of the department, those sanitary landfills qualifying for exemption under N.J.A.C. 7:26-4.8 may compute quantities of waste received by using an alternative, acceptable method.

[(d)] **(f)** Waste identification and definition of solids include the following:

1. Solid wastes; waste ID number and definitions:

i. 10 Municipal (household, commercial and institutional): Waste originating in the community consisting of household waste from private residences, commercial waste which originates in wholesale, retail or service establishments, such as, restaurants, stores, markets, theatres, hotels and warehouses, and institutional waste material originating in schools, hospitals, research institutions and public buildings.

ii. 12 Dry sewage sludge: Sludge from a sewage treatment plant which has been digested and dewatered and does not require liquid handling equipment.

iii. 13 Bulky waste: Large items of waste material, such as, appliances, furniture, whole trees, branches, tree trunks and stumps. Also included are waste building materials and rubble resulting from construction, remodeling, repair and demolition operations on houses, commercial buildings, pavements and other structures. Discarded automobiles, trucks and trailers and large vehicles parts, and tires are included under this category.

iv. 23 Vegetative waste: Waste materials from farms, plant nurseries and greenhouses that are produced from the raising of plants. This waste includes such crop residues as plant stalks, hulls, leaves and tree wastes processed through a wood chipper.

v. 25 Animal and food processing wastes: Processing waste materials generated in canneries, slaughterhouses, packing plants or similar industries. Also included are dead animals.

vi. 27 Dry industrial waste: Waste materials resulting from manufacturing, industrial and research and development processes and operations, and which are not hazardous in accordance with the standards and procedures set forth at N.J.A.C. 7:26-8. Also included are nonhazardous oil spill cleanup waste, dry nonhazardous pesticides, and dry nonhazardous chemical waste.

[(e)] **(g)** Waste identification and definition of liquids include the following:

1. Liquid wastes; waste ID number and definitions:

i. 72 Bulk liquid and semiliquids: Liquid or a mixture consisting of solid matter suspended in a liquid media which is contained within, or is discharged from, any one vessel, tank or other container which has the capacity of 20 gallons or more. Not included in this waste classification are septic tank clean-out wastes and liquid sewage sludge.

ii. 73 Septic tank clean-out wastes: Pumpings from septic tanks and cesspools. Not included are wastes from a sewage treatment plant.

iii. 74 Liquid sewage sludge: Liquid residue from a sewage treatment plant consisting of sewage solids combined with water and dissolved materials.

[(f)] **(h)** The following waste types have been consolidated under other categories:

1. 11 Institutional (See 10, Municipal);
2. 14 Construction and demolition (See 13, Bulky Waste);
3. 15 Pesticides; (see 27, Dry industrial waste and N.J.A.C. 7:26-8);
4. 16 Hazardous waste containers (see N.J.A.C. 7:26-8);
5. 17 Dry hazardous waste (See N.J.A.C. 7:26-8);
6. 18 Dry nonhazardous chemical waste (See 27, Dry industrial waste);
7. 19 Junked autos (see 13, Bulky waste);
8. 20 Tires (see 13, Bulky waste);
9. 21 Dead animals (see 25, Animal and food processing waste);
10. 22 Leaves and chopped tree wastes (see 23, vegetative waste);
11. 24 Tree stumps (see 13, Bulky waste);
12. 26 Oil spill cleanup wastes (see 27, Dry industrial waste and N.J.A.C. 7:26-8);
13. 28 Infectious waste (see N.J.A.C. 7:26-1.4 and the requirements established by the New Jersey Department of Health);
14. 70 Waste oil and sludges (see N.J.A.C. 7:26-8);
15. 71 Semisolid waste oils and sludges (see N.J.A.C. 7:26-8);
16. 75 Pesticide liquids (see 72, Bulk liquid and semiliquids and N.J.A.C. 7:26-8);
17. 76 Liquid hazardous waste (see N.J.A.C. 7:26-8);
18. 77 Liquid chemical waste (see N.J.A.C. 7:26-8)[;].

You're viewing an archived copy from the New Jersey State Library.

MISCELLANEOUS NOTICES

ENVIRONMENTAL PROTECTION

(a)

DIVISION OF WATER RESOURCES

Amendment to the Northeast Water Quality Management Plan

Public Notice

Warren Township Sewerage Authority (WTSA) has applied to the New Jersey Department of Environmental Protection for an amendment to the Northeast Water Quality Management (WQM) Plan. WTSA has requested permission to expand the Warren Stage IV sewage treatment plant (STP) from the current design capacity of 0.45 million gallons per day (MGD) with better than secondary wastewater treatment to design capacity of 0.80 MGD with treatment Level 4. (Treatment Level 4 is defined on page V-104 of the Northeast WQM Plan). Based on a report evaluating the cost of implementing Level 4 treatment, expansion of Warren Stage IV plant was found to be more cost-effective than constructing a regional facility as proposed in the Northeast WQM Plan. This regional facility would have been located at the site of the Passaic (Stirling) STP and would have served Passaic Township and that part of Warren Township that is in the Upper Passaic River drainage area.

This notice is being given to inform the public that NJDEP has prepared an amendment to the Northeast WQM Plan. This plan was adopted pursuant to the "Water Quality Planning Act" (N.J.S.A. 58:11A-1 et seq.) and the "Federal Water Pollution Control Act, as Amended". This amendment for expansion of the Warren Stage IV STP from 0.45 MGD with better than secondary treatment to 0.80 MGD with Level 4 treatment. It also eliminates the plans for a regional wastewater treatment facility to serve Passaic Township and part of Warren Township.

All information dealing with the aforesaid water quality management plans and the "Water Quality Planning Act" is located at the office of NJDEP, Division of Water Resources, Bureau of Planning and Standards located at 25 Artic Parkway in the Township of Ewing, Mercer County. It is available for inspection between 8:30 A.M. and 4:00 P.M., Monday through Friday.

Interested persons may submit written comments on the amendment to Mr. George Horzepa, Bureau of Planning and Standards, at the NJDEP address cited above. All comments must be submitted within 30 days of the date of this public notice. All comments submitted by interested persons in response to this notice, within the time limits, shall be considered by NJDEP with respect to the amendment request.

Any **interested person** may require in writing that NJDEP hold a nonadversarial public hearing on the amendment. This request must state the nature of the issues to be raised at the proposed hearing and must be submitted within 30 days of the date of this public notice to Mr. Horzepa at the NJDEP address cited above. If a public hearing is held, the public comment period in this notice shall automatically be extended to the close of the public hearing.

(b)

DIVISION OF WATER RESOURCES

Public Notice

On April 25, 1984 a public information hearing will be held, beginning at 10 A.M. at the:

Labor-Education Center Auditorium
Ryders Lane
Cook College-Rutgers University
New Brunswick, New Jersey

The purpose of the meeting is to explain to the public the new sewer extension program which was recently adopted by the Department.

Staff from the Division of Water Resources, Bureau of Municipal Waste Management will give a presentation covering the procedures to follow in complying with this program.

The new procedures will become effective on July 1, 1984.

LAW AND PUBLIC SAFETY

(c)

DIVISION OF MOTOR VEHICLES

Bulk Commodities Application

Public Notice

Take notice that Clifford W. Snedeker, Director, Division of Motor Vehicles pursuant to the authority of N.J.S.A. 39:5E.11, hereby lists the names and addressed of applicants who have filed an application for a common carrier's Certificate of Public Convenience and Necessity and/or a contract carrier permit to engage in the business of transporting bulk commodities in intrastate commerce.

You're viewing an archived copy from the New Jersey State Library.

CONTRACT CARRIER (NON-GRANDFATHER)

J.P. HARRISON AND SON, INC.
7 BRUNSWICK PLACE
POINT PLEASANT, NEW JERSEY 08742

F. MATLOCK, INC.
5851 KESSLERVILLE ROAD
NAZARETH, PA 18064

JOHN'S CONTRACT HAULING, INC.
4 HILLCREST AVENUE
BRIDGETON, NEW JERSEY 08302

ANGELO R. RIZZI SR. INC.
BOX 295 RD 2
SEWELL, NEW JERSEY 08080

R&R TIGER, INC.
RR #3, BOX 327A
CALIFON, NEW JERSEY 07830

C&C FISHER, INC.
99 PARK AVENUE
WASHINGTON, NEW JERSEY 07882

GEORGE WUNDER CORP.
RR 4 BOX 156
CALIFON, NEW JERSEY 07830

JOSEPH A. BARTHEL, INC.
12 MAIN STREET
P.O. BOX 192
BRANCHVILLE, NEW JERSEY 07826

Protests in writing and verified under oath may be presented by interested parties to the Director of Motor Vehicles within 20 days following the publication date of an application.

OTHER AGENCIES

(a)

CASINO CONTROL COMMISSION

Petition for Rulemaking
Casino License Fees

N.J.A.C. 19:41-9.4(f)

Petitioner: The Claridge at Park Place, Inc.
Authority: N.J.S.A. 5:12-69(c), 5:12-70(e), 5:12-139, N.J.A.C. 19:42-8 and N.J.S.A. 52:14B-4(f).

Take notice that on March 1, 1984, the Claridge at Park Place, Inc. ("Claridge"), a casino licensee trading as The Claridge Hotel & Casino, petitioned the Casino Control Commission for an amendment to N.J.A.C. 19:41-9.4(f), which prescribes the method by which any liability of the Casino Control Fund as of the end of each fiscal year is apportioned among casino licensees. The regulation presently divides this liability equally among casino licensees, with adjustments being made for those licensees which are in operation for less than the entire fiscal year,

The Claridge asserts in its petition that N.J.A.C. 19:41-9.4(f), as presently structured, is "an unreasonable, arbitrary and discriminatory formula for allocating the outstanding liability of the Fund and is contrary to Federal and State constitutional standards of equal protection." The Claridge submits that the allocation of the outstanding liability of the Fund among licensed casinos "should be premised on a formula which embodies the proposition that the ability to pay into the Fund should be predicated on the ability to earn," and that the "basic objective measure of the ability to earn is based on the number of gaming units at a licensed casino/hotel facility." According to Claridge, "the number of gaming units is a truer measure of the regulatory efforts which must be expended at a licensed casino/hotel facility in that the greater the number of gaming units, the greater the amount of casino square footage, the greater the number of casino/hotel employees, and in the final analysis, the greater the number of hours which will be required by the Commission and Division staff members to regulate the facility."

The Claridge has requested that N.J.A.C. 19:41-9.4(f) be amended as follows:

A licensed casino facility shall be required to pay, as a component of the renewal fee for any casino license necessary to casino operations therein and as a condition of any such casino license, a share of the amount of any liability of the Casino Control Fund existing as of the close of business on June 30 of each fiscal year. The share for each licensed casino facility shall be the amount which is in the same proportion to the total liability as the proportion of the [number of months in the fiscal year when casino operations are conducted or authorized in the facility to the total number of such months for all licensed casino facilities. For purposes of this calculation any part of a calendar month shall be considered a full month. Any months during which a necessary casino license or operation certificate for a licensed casino facility has been suspended shall also be counted in determining the share of such facility. Further, the operation of the facility by a conservator or trustee shall be deemed continued operation by the casino operator for these purposes.] **total of gaming units in operation at a given licensed casino facility to the total number of gaming units in operation at all licensed facilities. For the purposes of this calculation a gaming unit is a slot machine or table game in existence on July 1 of any gaming year. In the event a licensed casino/hotel facility becomes licensed after July 1 of any gaming year, the calculation of the number of gaming units shall be the number of units designated in the operation certificate for that casino licensee.** The primary obligation to pay the assessed share of a licensed casino facility shall be upon the casino operator; provided that where a change of casino operators occurs during the fiscal year each such operator shall be liable for an amount of the share apportioned according to the time during which each operator functioned.

After due notice, this petition will be considered by the Casino Control Commission in accordance with the provisions of N.J.S.A. 5:12-69(c), N.J.A.C. 19:42-8 and N.J.S.A. 52-14B-4(f).

You're viewing an archived copy from the New Jersey State Library.

INDEX OF PROPOSED RULES

The *Index of Proposed Rules* contains rules which have been proposed in the New Jersey Register between April 4, 1983, and April 2, 1984, and which have not been adopted and filed by April 2, 1984. **The index does not contain rules proposed in this Register and listed in the Table of Rules in This Issue. These proposals will appear in the next Index of Proposed Rules.**

A proposed rule listed in this index may be adopted no later than one year from the date the proposal was originally published in the Register. Failure to timely adopt the proposed rule requires the proposing agency to re-submit the proposal and to comply with the notice and opportunity-to-be-heard requirements of the Administrative Procedure Act (N.J.S.A. 52:14B-1 et seq.) as implemented by the Rules for Agency Rulemaking of the Office of Administrative Law (N.J.A.C. 1:30).

The *Index of Proposed Rules* appears in the second issue of each month, complementing the *Index of Adopted Rules* which appears in the first Register of each month. Together, these indices make available for a subscriber to the Code and Register all legally effective rules, and enable the subscriber to keep track of all State agency rulemaking activity from the initial proposal through final promulgation.

The proposed rules are listed below in order of their Code citation. Accompanying the Code citation for each proposal is a brief description of its contents, the date of its publication in the Register, and its Register citation.

The full text of the proposed rule will generally appear in the Register. If the full text of the proposed rule was not printed in the Register, it is available for a fee from:

Administrative Filings
CN 301
Trenton, New Jersey 08625

N.J.A.C. CITATION		PROPOSAL DATE	PROPOSAL NOTICE (N.J.R. CITATION)
ADMINISTRATIVE LAW–TITLE 1			
1:1-1.3	Reaching the merits	9-6-83	15 N.J.R. 1398(a)
1:1-3.7, 3.12, 3.13	Lay representation in contested Cases	3-19-84	16 N.J.R. 472(a)
1:2-2.10	Lay representation in contested cases	3-19-84	16 N.J.R. 472(a)
1:6A-4.2	Lay representation in contested cases	3-19-84	16 N.J.R. 472(a)
1:6A-5.3	Special education hearings: transfer of record	3-5-83	16 N.J.R. 408(a)
AGRICULTURE–TITLE 2			
2:3-2	Readopt Livestock of Breeding and Herd Replacements	2-21-84	16 N.J.R. 294(a)
2:5-2	Readopt Equine Embargo rules	4-2-84	16 N.J.R. 578(a)
2:5-4	Area quarantine for avian influenza (with Emergency Adoption)	12-19-83	15 N.J.R. 2176(a)
2:32-2.17, 2.32, 2.36	Sire stakes conditions	2-21-84	16 N.J.R. 297(a)
2:69-1.11	Commercial values for fertilizers and conditioners	5-2-83	15 N.J.R. 658(a)
2:76-3	Farmland preservation programs	4-2-84	16 N.J.R. 579(a)
2:76-4	Municipally-approved farmland preservation	4-2-84	16 N.J.R. 582(a)
BANKING–TITLE 3			
3:1-2.21	New capital stock savings and loan associations	2-6-84	16 N.J.R. 174(a)
3:1-13.1	Public hearing: insurance tie-in prohibition by lenders	8-1-83	15 N.J.R. 1207(a)
3:1-13.1	Insurance tie-in prohibition	4-2-84	16 N.J.R. 586(a)
3:6-3	Readopt rules on Executive Officers and loan policy	3-19-84	16 N.J.R. 475(a)
3:19-2.1	Repeal maximum interest rate on home repair contracts	11-7-83	15 N.J.R. 1788(a)
3:22-1	Repeal maximum finance rate on insurance premiums	10-17-83	15 N.J.R. 1707(a)
3:22-1.4	Premium finance agreement disclosure	2-21-84	16 N.J.R. 298(a)
3:24	Licensing of check cashing businesses	4-2-84	16 N.J.R. 586(b)
CIVIL SERVICE–TITLE 4			
4:1-5.5	Awarding back pay	1-17-84	16 N.J.R. 97(a)
4:1-14.6	Interim appointments	12-5-83	15 N.J.R. 1975(a)
4:1-17	Leaves of Absence	4-2-84	16 N.J.R. 590(a)
4:2-14.1	Interim appointments	12-5-83	15 N.J.R. 1975(a)
4:2-17	Leaves of Absence	4-2-84	16 N.J.R. 590(a)
4:3-8.2	Repeal county welfare board promotion rules	11-7-83	15 N.J.R. 1788(b)
4:3-14.2	Interim appointments	12-5-83	15 N.J.R. 1975(a)
4:3-17	Leaves of Absence	4-2-84	16 N.J.R. 590(a)
COMMUNITY AFFAIRS–TITLE 5			
5:11	Readopt Relocation Assistance and Eviction rules	2-6-84	16 N.J.R. 175(a)
5:23-1.4, 2.23	UCC: Certificate of continued occupancy	2-6-84	16 N.J.R. 179(a)
5:23-4.5A, 4.18, 4.21	UCC: Private onsite inspection and plan review agencies	1-3-84	16 N.J.R. 3(a)
5:23-6.1, 6.2	Technical standards for fire suppression systems	2-6-84	16 N.J.R. 180(a)
5:27-1.6, 1.9	State-contracted community residences	2-6-84	16 N.J.R. 181(a)
5:27-5.3	Fire safety in rooming and boarding houses	2-21-84	16 N.J.R. 299(a)

You're viewing an archived copy from the New Jersey State Library.

N.J.A.C. CITATION		PROPOSAL DATE	PROPOSAL NOTICE (N.J.R. CITATION)
5:30-10.1, 10.2	Local finance: municipal port authorities	8-15-83	15 N.J.R. 1304(a)
5:37-11.6	Municipal and county employees deferred compensation programs: annual audit	9-6-83	15 N.J.R. 1408(b)
5:80-2	Private investment in HFA-financed housing	8-1-83	15 N.J.R. 1208(a)
5:100-1	Ombudsman for Institutionalized Elderly: administrative rules	3-19-84	16 N.J.R. 476(a)
EDUCATION-TITLE 6			
6:2-1.1-1.20	Appeals to the State Board	12-5-83	15 N.J.R. 1977(b)
6:8	Readopt Thorough and Efficient System rules	4-2-84	16 N.J.R. 597(a)
6:20-3.1	Determining tuition rates (public schools)	12-19-83	15 N.J.R. 2089(a)
6:20-3.1	Determining public school tuition rates: extention of comment period	2-6-84	16 N.J.R. 254(a)
6:20-8.1	Public school contracts: competitive bidding	2-21-84	16 N.J.R. 299(b)
6:28	Special Education rules	12-5-83	15 N.J.R. 1981(a)
6:28	Special Education	4-2-84	16 N.J.R. 611(a)
6:29-4	Readopt School Health Services rules	2-21-84	16 N.J.R. 300(a)
6:29-6	Readopt Physical Education and Athletics Personnel rules	2-21-84	16 N.J.R. 303(a)
6:39-1.1-1.4	Statewide testing program	6-20-83	15 N.J.R. 979(b)
ENVIRONMENTAL PROTECTION-TITLE 7			
7:1A-1-5	Water Supply Bond Loan Programs	4-2-84	16 N.J.R. 631(a)
7:1E-App. A	List of hazardous substances—Part V (with Emergency Adoption)	1-17-84	16 N.J.R. 158(a)
7:1G-1-5	Environmental Hazardous Substance List	4-2-84	16 N.J.R. 646(a)
7:7	Coastal Permit Program rules	12-19-83	15 N.J.R. 2090(a)
7:7A	Repeal	12-19-83	15 N.J.R. 2090(a)
7:7D	Repeal	12-19-83	15 N.J.R. 2090(a)
7:9-13	Readopt Sewer Extension Ban rules	4-2-84	16 N.J.R. 660(a)
7:12-2.7	Hard clam relay: Special Permits Program (with Emergency Adoption)	3-19-84	16 N.J.R. 558(a)
7:13	Flood hazard area rules	12-19-83	15 N.J.R. 2104(a)
7:13	Flood hazard area rules: public comment period	12-19-83	16 N.J.R. 396(b)
7:13-1.11(c)30	Delineated floodways for Delaware Bay tributaries	9-19-83	15 N.J.R. 1541(a)
7:13-1.11(d)	Floodway delineation in Roseland, Essex County	8-15-83	15 N.J.R. 1313(a)
7:13-1.11(d)	Floodway delineation along Third River in Clifton	9-6-83	15 N.J.R. 1412(a)
7:13-1.11(d)42	Delineated floodways for Green Brook and Bound Brook	9-19-83	15 N.J.R. 1540(a)
7:14-4.4	NJPDES: local control over dischargers	7-5-83	15 N.J.R. 1059(b)
7:14-8	Water pollution control: readopt civil penalty assessment rules	2-6-84	16 N.J.R. 181(b)
7:14A-1.9, 10.1, 10.5, 13.1, 13.2, 13.5-13.8	NJPDES: local control over dischargers	7-5-83	15 N.J.R. 1059(b)
7:14A-4.4, 4.7, 6.1, 6.2, 6.15	Hazardous waste land disposal	12-5-83	15 N.J.R. 1997(a)
7:14A-4.6	Hazardous waste management	2-21-84	16 N.J.R. 306(a)
7:14A-14	NJPDES: oil and grease effluent limitations	8-15-83	15 N.J.R. 1313(b)
7:19-4.3, 4.7, 4.9	Water supply allocation: payments for diversion	4-2-84	16 N.J.R. 664(a)
7:19-5	Small water company takeover	3-19-84	16 N.J.R. 563(a)
7:19A	Emergency Water Supply Allocation Plan rules	2-21-84	16 N.J.R. 308(a)
7:19B	Emergency Water Surcharge Schedule	2-21-84	16 N.J.R. 314(a)
7:23-1, 2	Readopt rules on Flood Control Bond Grants	4-2-84	16 N.J.R. 668(a)
7:25-4, 11, 20	Readopt Endangered, Nongame and Exotic Wildlife rules	1-17-84	16 N.J.R. 97(b)
7:26-1.4, 2.6, 2.10, 2.13, 3.5	Disposal of asbestos waste	3-5-84	16 N.J.R. 440(a)
7:26-1.4, 10.6, 10.8, 11.3, 12.2	Hazardous waste land disposal	12-5-83	15 N.J.R. 1997(a)
7:26-7.4, 7.6, 8.15, 9.1, 9.4, 9.6, 10.3, 12.1	Hazardous waste management	2-21-84	16 N.J.R. 306(a)
7:26-8.14	Delist leather tanning and TiO_2 wastestreams	11-7-83	15 N.J.R. 1816(a)
7:26-8.15(f)	Delist Indomethacin as hazardous waste	11-7-83	15 N.J.R. 1817(a)
7:26-13A	Hazardous Waste Facilities Siting Commission rules	3-5-84	16 N.J.R. 408(b)
7:28-42	Radio frequency radiation	1-3-84	16 N.J.R. 7(a)

You're viewing an archived copy from the New Jersey State Library.

N.J.A.C. CITATION		PROPOSAL DATE	PROPOSAL NOTICE (N.J.R. CITATION)
HEALTH–TITLE 8			
8:8	Blood collection, processing, storage and distribution	2-21-84	16 N.J.R. 316(a)
8:21-1.32	Drug manufacturer's labeling requirements	1-17-84	16 N.J.R. 99(a)
8:21-2.31–2.33	Repeal (see 8:21-13)	8-15-83	15 N.J.R. 1318(a)
8:21-2.40	EDB levels in food; recall of products (with Emergency Adoption)	3-5-84	16 N.J.R. 436(a)
8:21-13	Wholesale food establishments	8-15-83	15 N.J.R. 1318(a)
8:21A-2.45	Retention period for radioactive drug samples	11-7-83	15 N.J.R. 1818(a)
8:31-16.1	Hospital long-range strategic plans	1-17-84	16 N.J.R. 100(a)
8:31-28	Readopt Certification of Need and Designation of Regional Services	1-17-84	16 N.J.R. 101(a)
8:31B-3.23, 3.24, 3.43, 3.75	Hospital rate setting: outpatient dialysis reimbursement hospital-based physician costs	4-2-84	16 N.J.R. 669(a)
8:31B-4.32	Waiver extension of Medicare/Medicaid reimbursement principles (with Emergency Adoption)	2-6-84	16 N.J.R. 252(a)
8:33J	Certificate of Need: Nuclear Magnetic Resonance Services	1-17-84	16 N.J.R. 102(a)
8:33K	Certificate of Need: Residential Alcoholism Treatment Beds Standards	1-17-84	16 N.J.R. 104(a)
8:35	Repeal (see 8:43B-8)	2-6-84	16 N.J.R. 188(a)
8:43-2	Sheltered care homes: readopt Building Requirements rules	2-21-84	16 N.J.R. 325(a)
8:43B-3	Hospital facilities: readopt Physical Plant rules	2-21-84	16 N.J.R. 327(a)
8:43B-8	Hospital licensure: obstetric and newborn services	2-6-84	16 N.J.R. 188(a)
8:43B-10	Pharmaceutical services in hospital facilities	1-17-84	16 N.J.R. 107(a)
8:59-1	Workplace Hazardous Substances	3-19-84	16 N.J.R. 478(a)
8:71	Additions to generic drug list (see 15 N.J.R. 846(a), 16 N.J.R. 142(a))	6-6-83	15 N.J.R. 846(a)
8:71	Generic drug list additions (see 16 N.J.R. 142(b))	11-7-83	15 N.J.R. 1819(a)
8:71	Additions to generic drug list	2-6-84	16 N.J.R. 202(a)
HIGHER EDUCATION–TITLE 9			
9:2-3.8	Layoff notice at State Colleges	5-2-83	15 N.J.R. 663(a)
9:4-3.10–3.16	County colleges: State aid guidelines	4-2-84	16 N.J.R. 671(a)
9:7-2.10	Student Assistance: minimum academic progress	4-2-84	16 N.J.R. 674(a)
9:9-1.2, 9.3	Guaranteed Student Loan and Parent Loan amounts	2-6-84	16 N.J.R. 203(a)
HUMAN SERVICES–TITLE 10			
10:49-1.16	LTCF: loss of provider certification	1-17-84	16 N.J.R. 118(a)
10:49-10	Readopt Prepaid Health Care Services; Title XIX Eligibles	4-2-84	16 N.J.R. 675(a)
10:52-1.2, 1.3	Covered and non-covered inpatient hospital services	3-19-84	16 N.J.R. 483(a)
10:53-1.2, 1.3	Covered and non-covered inpatient hospital services	3-19-84	16 N.J.R. 483(a)
10:54-3	Readopt Medicaid Procedure Code Manual	3-19-84	16 N.J.R. 485(a)
10:54-3	Preproposal: radioimmunoassay laboratory fees	4-2-84	16 N.J.R. 677(a)
10:55-3.1	Prosthetic and orthotic procedure codes	4-2-84	16 N.J.R. 678(a)
10:63-1	Long Term Care Services Manual: readopt General Provisions	2-6-84	16 N.J.R. 204(a)
10:63-1.4	Long Term Care: services requiring consultations or referrals	9-19-83	15 N.J.R. 1543(a)
10:63-1.6	Lont-term care: authorization process	11-21-83	15 N.J.R. 1917(a)
10:81-3.34	PAM: Temporary absence of children from home	12-19-83	15 N.J.R. 2134(a)
10:81-8	PAM: readopt Other Governmental Programs	4-2-84	16 N.J.R. 679(a)
10:81-8.24	PAM: Medicaid Special; income calculations	4-2-84	16 N.J.R. 682(a)
10:81-11	PAM: Child Support and Paternity	2-21-84	16 N.J.R. 328(a)
10:81-App. D	Repeal (see 10:81-11)	2-21-84	16 N.J.R. 328(a)
10:82-4.10, 4.12	ASH: income from rentals	12-5-83	15 N.J.R. 2019(a)
10:82-3.1–3.7	ASH: resource eligibility in AFDC	3-19-84	16 N.J.R. 486(a)
10:85-3.3	GAM: maternity home care	4-2-84	16 N.J.R. 683(a)
10:85-5.3	GAM: DRG rates for outpatient services	5-2-83	15 N.J.R. 666(a)
10:90-4.8	AFDC: Recovery of overpayments and correction of underpayments	7-18-83	15 N.J.R. 1162(a)
10:94-5.6	Medicaid "cap" income eligibility standard	4-2-84	16 N.J.R. 684(a)
10:97	Vending Facility Program for Blind	12-5-83	15 N.J.R. 2020(a)
10:100-1.23	SSI payment levels recodified as 10:100–App. A (with Emergency Adoption)	7-18-83	15 N.J.R. 1188(a)
10:128	Residential Child Care rules	1-3-84	16 N.J.R. 10(b)
10:133	Aversive conditioning of autistic patients	9-6-83	15 N.J.R. 1432(a)
INSURANCE–TITLE 11			
11:3-7.8, 7.9	PIP premium on additional automobiles	3-19-84	16 N.J.R. 488(a)
11:3-8	Nonrenewal of auto insurance policies	1-17-84	16 N.J.R. 120(a)

You're viewing an archived copy from the New Jersey State Library.

N.J.A.C. CITATION		PROPOSAL DATE	PROPOSAL NOTICE (N.J.R. CITATION)
11:5-1.2, 1.27, 1.28	Real estate salesperson: license and educational requirements	3-19-84	16 N.J.R. 489(a)
11:5-1.25	Correction: Sale of interstate properties	12-5-83	15 N.J.R. 2026(a)
11:14	Auto body repair facilities	1-3-84	16 N.J.R. 25(a)
11:15	Hospital workers' group self insurance	2-21-84	16 N.J.R. 340(a)
LABOR-TITLE 12			
12:17-5.1	Claim for partial unemployment benefits	9-6-83	15 N.J.R. 1435(b)
LAW AND PUBLIC SAFETY-TITLE 13			
13:2-2	ABC: readopt filing and notice rules for Municipal License Applications	2-21-84	16 N.J.R. 345(a)
13:2-5	ABC: readopt Issuance of Special Permits by Director	3-19-84	16 N.J.R. 492(a)
13:2-7	ABC: readopt Transfers of State and Municipal Licenses rules	3-19-84	16 N.J.R. 493(a)
13:2-8	ABC: readopt Club Licenses rules	3-19-84	16 N.J.R. 494(a)
13:2-18	ABC: readopt Petition Proceedings; Discrimination Against Wholesalers rules	3-19-84	16 N.J.R. 495(a)
13:2-24	ABC: readopt Trade Member Discrimination, Marketing and Advertising rules	3-5-84	16 N.J.R. 412(a)
13:2-24.12	ABC: marketing and advertising	11-21-83	15 N.J.R. 1921(a)
13:2-25	ABC: readopt Diversion, Transshipment and Registered Distribution rules	3-19-84	16 N.J.R. 496(a)
13:2-26.1	ABC: readopt Retail Cooperative Purchases rules	3-19-84	16 N.J.R. 497(a)
13:2-27	ABC: readopt Labeling and Standards of Fill; Deposit Marked Containers rules	3-19-84	16 N.J.R. 497(b)
13:2-29	ABC: readopt Records rules	3-19-84	16 N.J.R. 498(a)
13:2-33	ABC: readopt Product Information Filing; Brand Registration rules	3-19-84	16 N.J.R. 499(a)
13:2-36.1	ABC: readopt Requests for Advisory Opinions rules	3-19-84	16 N.J.R. 500(a)
13:2-37	ABC: readopt Contracts of Employment and Conduct of Solicitors rules	3-19-84	16 N.J.R. 501(a)
13:2-39	ABC: readopt rules on Credit Terms; Required Records; Returns; Notices	3-19-84	16 N.J.R. 501(b)
13:10	Readopt Multiple Dwelling Reporting of tenancy composition	3-5-84	16 N.J.R. 415(a)
13:19-1	Motor vehicle license suspensions: prehearing conferences	12-19-83	15 N.J.R. 2143(a)
13:19-10	Readopt Point System and Driving During Suspension rules	2-21-84	16 N.J.R. 347(a)
13:19-10	Point System and Driving During Suspension: 25-day waiver of expiration of rules	3-19-84	16 N.J.R. 502(a)
13:20-2.3	Commercial motor vehicles: maximum width computation	9-19-83	15 N.J.R. 1559(a)
13:20-33	Motor Vehicles: readopt Licensed Reinspection Center rules	3-19-84	16 N.J.R. 503(a)
13:20-34.7	Motor Vehicles: reissuance of particular identifying marks	2-21-84	16 N.J.R. 347(b)
13:21-21	Used motor vehicles: temporary transit permits	8-1-83	15 N.J.R. 1233(a)
13:23	Licensing of commercial drivers' schools	2-6-84	16 N.J.R. 209(a)
13:35-2.4(k)	Chiropractic school accreditation	4-4-83	15 N.J.R. 503(a)
13:35-2.13	Graduate physician pending licensure: privileges and conditions	2-6-84	16 N.J.R. 216(a)
13:35-2.14	Graduate nurse midwife certification	4-2-84	16 N.J.R. 685(a)
13:35-3.11	Licensure of graduates of foreign medical schools	3-19-84	16 N.J.R. 503(b)
13:35-6.6	Prescribing and dispensing medications	3-5-84	16 N.J.R. 416(a)
13:35-6.10	Advertising by medical board licensees	1-3-84	16 N.J.R. 32(a)
13:35-7.1	Chiropractic practice: standards and scope	4-2-84	16 N.J.R. 686(a)
13:36	Readopt Board of Mortuary Science rules	3-19-84	16 N.J.R. 505(a)
13:37-2-6, 9, 10, 11	Board of Nursing: licensure by examination and endorsement; foreign nurses; nursing procedures	11-7-83	15 N.J.R. 1850(a)
13:40-5.1	Preparation of land surveys	11-7-83	15 N.J.R. 1834(a)
13:44-1.1, 1.2	Veterinary examiners: approval of schools; licensure examination	7-18-83	15 N.J.R. 1175(a)
13:44-2	Veterinary Medical Examiners: readopt General Rules of Practice	4-2-84	16 N.J.R. 688(a)
13:45A-20	Resale of tickets of admission to places of entertainment	3-5-84	16 N.J.R. 417(a)
13:45A-21	Sale of Kosher food	11-21-83	15 N.J.R. 1924(a)
13:46-5.1	Boxer licensure and medical examinations	5-16-83	15 N.J.R. 786(a)
13:47A-12	Limited registration for securities broker-dealers and agents	12-19-83	15 N.J.R. 2146(a)
13:49-1-8	Death Investigations rules: extension of comment period	10-3-83	15 N.J.R. 1672(a)
13:70-6	Thoroughbred Rules: readopt rules on Entries and Subscriptions	4-2-84	16 N.J.R. 690(a)
13:71-7.25, 7.26	Harness racing: application for driver's license	4-2-84	16 N.J.R. 691(a)
13:71-18.2	Harness racing: testing of drivers	2-6-84	16 N.J.R. 223(a)

You're viewing an archived copy from the New Jersey State Library.

N.J.A.C. CITATION		PROPOSAL DATE	PROPOSAL NOTICE (N.J.R. CITATION)
PUBLIC UTILITIES-TITLE 14			
14:3-3, 7	All Utilities: readopt Service, and Bills and Payments rules	4-2-84	16 N.J.R. 693(a)
14:3-4.7	Adjustment of charges for inaccurate billings	3-19-84	16 N.J.R. 511(a)
14:17-6.21	CATV: petitions to set aside variance refusal	1-17-84	16 N.J.R. 125(a)
14:18-1.2, 3.9	CATV: credit for service outages	9-6-83	15 N.J.R. 1447(a)
14:18-11.21	CATV: renewal of municipal consents	2-21-84	16 N.J.R. 348(a)
ENERGY-TITLE 14A			
14A:2-3	Readopt emergency allocation rules for motor gasoline	3-5-84	16 N.J.R. 419(a)
14A:22	Commercial and Apartment Conservation Service Program	2-21-84	16 N.J.R. 349(a)
14A:22	Commercial and Apartment Conservation Service Program: public hearing	2-21-84	16 N.J.R. 397(a)
STATE-TITLE 15			
TRANSPORTATION-TITLE 16			
16:21A	Bridge Rehabilitation and Improvement Fund: local aid (with Emergency Adoption)	3-5-84	16 N.J.R. 437(a)
16:21A	Bridge Rehabilitation and Improvement Fund (with Emergency Adoption)	3-5-84	16 N.J.R. 437(a)
16:28A-1.55	Parking on US 202 in Morris Plains	3-19-84	16 N.J.R. 512(a)
16:32	Designated routes for special categories of trucks	10-3-83	15 N.J.R. 1644(a)
16:32-1.2	Pre-proposal: Regulation of 102-inch-wide trucks	10-3-83	15 N.J.R. 1636(b)
16:41B	Newspaper dispensers on State highways	2-6-84	16 N.J.R. 225(a)
16:49	Transportation of hazardous materials	3-19-84	16 N.J.R. 513(a)
16:56	Airport Safety Improvement Aid	4-2-84	16 N.J.R. 694(a)
TREASURY-GENERAL-TITLE 17			
17:1-2.18	Alternate Benefit Program: contributions	4-2-84	16 N.J.R. 703(a)
17:2-3.3	PERS: contributory insurance rate	2-21-84	16 N.J.R. 358(a)
17:21	Repeal lottery game rules	8-15-83	15 N.J.R. 1361(a)
TREASURY-TAXATION-TITLE 18			
18:3	Readopt Alcoholic Beverage Tax Act rules	3-19-84	16 N.J.R. 513(b)
18:5	Readopt Cigarette Tax rules	2-6-84	16 N.J.R. 228(a)
18:12-7.12	Homestead Rebate: filing extention for claims (with Emergency Adoption)	2-6-84	16 N.J.R. 252(b)
18:15-2	Application for farmland assessment	12-19-83	15 N.J.R. 2152(a)
18:18	Readopt Motor Fuels Tax rules	2-21-84	16 N.J.R. 358(b)
18:19	Readopt Motor Fuels Retail Sales rules	3-5-84	16 N.J.R. 420(a)
18:24-7.12	Sales tax and motor vehicle reinspection	2-6-84	16 N.J.R. 235(a)
18:24-7.19	Sales Tax: manufactured and mobile homes	2-21-84	16 N.J.R. 359(a)
18:24-30	Sales tax exemption: prescription and over-the-counter drugs	6-6-83	15 N.J.R. 885(b)
18:35-1.18	Gross Income Tax: extension of time to file	3-19-84	16 N.J.R. 514(a)
TITLE 19 SUBTITLES A-L-OTHER AGENCIES (Except Casino Control Commission)			
19:30-6	Affirmative action in construction projects	4-2-84	16 N.J.R. 704(a)
19:61-5.5	State government positions with casino responsibility	3-19-84	16 N.J.R. 517(a)
TITLE 19 SUBTITLE K-CASINO CONTROL COMMISSION			
19:43-1	Readopt Casino Service Industries rules	3-19-84	16 N.J.R. 515(a)
19:45-1.1, 1.11, 1.25-1.29, 1.45, 1.47, 1.48	Casino Credit practices	10-17-83	15 N.J.R. 1743(a)
19:45-1.6	Standard financial and statistical reports	2-21-84	16 N.J.R. 361(a)
19:45-1.11	Questioning and detainment of persons	7-18-83	15 N.J.R. 1177(b)
19:46-1.5, 1.6	Use and handling of gaming tokens	1-3-84	16 N.J.R. 41(a)
19:46-1.27	Gaming equipment: slot stools	9-6-83	15 N.J.R. 1465(a)
19:47-2.2	Correction: Double shoe in blackjack		14 N.J.R. 832(a)
19:54-2	Investment obligations and investment alternative tax	11-21-83	15 N.J.R. 1931(a)
19:54-2.9, 2.27	Section 144 investment obligation and alternate tax	2-21-84	16 N.J.R. 362(a)

You're viewing an archived copy from the New Jersey State Library.

The following rules were proposed in the New Jersey Register, but have not been timely adopted and therefore have expired pursuant to N.J.A.C. 1:30-4.2(c).

N.J.A.C. CITATION		PROPOSAL DATE	PROPOSAL NOTICE (N.J.R. CITATION)
10:49-1.4	Proposal withdrawal: Personal care services	3-21-83	15 N.J.R. 420(b)
10:66-1.6, 3.3	Proposal withdrawal: Personal care services	3-21-83	15 N.J.R. 420(b)
11:3-6.1-6.4	Automobile insurance identification cards	3-7-83	15 N.J.R. 315(a)
11:10	Dental plan organizations	3-21-83	15 N.J.R. 423(a)
18:7-5.2	Corporation Business Tax: Entire net income	3-21-83	15 N.J.R. 427(a)

You're viewing an archived copy from the New Jersey State Library.

NOTES

You're viewing an archived copy from the New Jersey State Library.

NEW JERSEY

YOUR BASIC RULE RESEARCH STARTS WITH THE 31-VOLUME NEW JERSEY ADMINISTRATIVE CODE

A subscription to New Jersey Administrative Code (31 loose-leaf volumes) includes one year of updated replacement pages, plus 24 issues of the twice-monthly New Jersey Register – the official interim supplement to the Code.

ADMINISTRATIVE CODE TITLES	Prices
Full Set (includes all Titles below)	$500
Individual Titles (prices include one year of updated replacement pages)*	
1. Uniform Administrative Procedure	$35
2. Agriculture	$35
3. Banking	$35
4. Civil Service	$35
5. Community Affairs (two volumes)	$70
6. Education (two volumes)	$70
7. Environmental Protection (two volumes)	$70
8. Health (three volumes)	$105
9. Higher Education	$35
10. Human Services (three volumes)	$105
10A. Corrections	$35
11. Insurance	$35
12. Labor and Industry (two volumes)	$70
13. Law and Public Safety (three volumes)	$105
14A. Energy (includes 14–Public Utilities)	$35
15. State	$35
15A. Public Advocate	$35
16. Transportation	$35
17. Treasury–General	$35
18. Treasury–Taxation (two volumes)	$70
19. Other Agencies (Mortgage Finance Agency, Expressway Authority, Hackensack Meadowlands Development Commission, Highway Authority, Turnpike Authority, Public Employment Relations Commission, Sports and Exposition Authority, Election Law Enforcement Commission, Economic Development Authority, Public Broadcasting Authority)	$35
19K. Casino Control Commission	$35

*Individual Title Subscribers, add on a full year of the New Jersey Register (24 issues delivered by second class mail) for just $30 – a $10 saving over the regular annual rate. A full year by First Class Mail is just $80–also a $10 saving over the normal rate.

Full Set Subscribers, get the Register by First Class Mail for only an additional $50 (regular delivery is by second class mail).

ADMINISTRATIVE CODE ORDER FORM

Full Set, $500 [ ]
With First Class delivery of Register, $550 [ ]

Individual Titles (specify Title number and name, and number of copies):

_____

_____

_____

_____

(See price list) $ _____

With Register add-on ($30 or $80) _____

Total $ _____

New Jersey Register only (one year)

By second class mail, $40 [ ]

By first class mail, $90 [ ]

Prepayment is required. Please make check payable to Administrative Publications, CN301, Trenton, New Jersey 08625.

Name and Delivery Address:

_____

_____

_____

_____

You're viewing an archived copy from the New Jersey State Library.

CONTENTS
(Continued From Front Cover)

Pharmaceutical internships and externships: readopt Approved Training rules ..... 843(a)
Thoroughbred horses: administering medicine ..... 845(a)
Violent Crimes Compensation Board: practice and procedure ..... 846(a)
TRANSPORTATION
Speed rates on Route 179 in Hunterdon County .... 852(a)
Restricted Parking and Stopping: Route U.S. 1, U.S. 206 and 159 ..... 853(a)
Parking on Route 4 in Hackensack ..... 854(a)
Restricted Parking and Stopping: Rules U.S. 9 and I-280, Collector-Distributor Rd. ..... 855(a)
Restricted Parking and Stopping: Rtes 70, U.S. 1 Alternate; U.S. 22, 37, 56, 63 and 24 ..... 855(b)
Restricted Parking and Stopping: U.S. 1 Alternate and 45 ..... 858(a)
Restricted Parking and Stopping: Route 56 ..... 858(b)
Traffic Rules: Mid-Block Crosswalk on Route U.S. 206; other regular designated pedestrian crossing ..... 859(b)
Turns: Route U.S. 206 ..... 860(a)
Air safety and hazardous zoning ..... 860(b)
TREASURY
Purchase Bureau Procedures ..... 867(a)
Educational loans: collection from State employees . 868(a)

RULE ADOPTIONS

BANKING
Minimum Stock Subscription for Capital Stock Associations ..... 870(a)
COMMUNITY AFFAIRS
Relocation Assistance and Eviction ..... 870(b)
Uniform Construction Code: Certificate of Continued Occupancy ..... 873(a)
Uniform Construction Code: Tax Exemptions ..... 874(a)
Sale of Projects Owned by Nonprofit Corporations to Limited Dividend Partnerships ..... 875(a)
EDUCATION
Appeals to the State Board: General Provisions .... 878(a)
ENVIRONMENTAL PROTECTION
Flood Hazard Area Delineations ..... 881(a)
Pollutant Discharge Elimination System Significant Indirect Users: Sludge Quality Assurance ..... 882(a)
Non game and Exotic Wildlife: endangered species . 889(a)
HEALTH
Drug manufacturer's labeling requirement ..... 891(a)
Hospital Long-Range Strategic Plans ..... 891(b)
Process and General Criteria for the Certification of Need and Designation of Regional Services .... 893(a)
Financial Elements and Reporting Services Related to Patient Care ..... 893(b)
Certificate of Need: Residential Alcoholism Treatment Bed Standards ..... 894(a)
HUMAN SERVICES
Long Term Care Services Manual: General Provisions ..... 896(a)
PAM: Child Support Program ..... 898(a)
Vending facility operated by N.J. Commission for the Blind and Visually Impaired designated as the State Licensing Agency ..... 909(a)
LAW AND PUBLIC SAFETY
Filing and licensing Notice of Application for Municipal License ..... 916(a)
Marketing and Advertising: Regulation of Display Services and Advertising Promoters ..... 916(b)
Driver Control Service: Administrative Hearing .... 918(a)
Driver Control Service: point system and driving during suspension ..... 920(a)
Limited Privileges and Conditions of Practice Permitted for a Graduate Physician Pending Licensure .. 920(b)
Advertising and Solicitation Practices ..... 921(a)
Licensure by Examination and Endorsements: Foreign Nurses; Nursing Procedures ..... 922(a)
TREASURY-TAXATION
Cigarette Tax ..... 925(a)
Local property tax: farmland assessment ..... 925(b)
Motor Fuel Taxation ..... 926(a)
Sales and Use Tax: Motor Vehicles; Taxable and Exempt Services ..... 926(b)
OTHER AGENCIES
CASINO CONTROL COMMISSION
Accounting and Internal Controls: standard financial and statistical reports ..... 927(a)
Taxes: Section 144 Investment Obligation and Investment Alternative Tax ..... 927(b)

EMERGENCY ADOPTIONS

ENVIRONMENTAL PROTECTION
Shell-fish Harvesting: Closure of Seasonally Approved and Approved Areas ..... 929(a)
Sanitary Landfills: Records ..... 930(a)

MISCELLANEOUS NOTICES

ENVIRONMENTAL PROTECTION
Northeast Water Quality Management Plan ..... 932(a)
Public Information Hearing: Sewer Extension Program ..... 932(b)
LAW AND PUBLIC SAFETY
Certificate of Public Convenience and Necessity: bulk commodities transport applicants ..... 932(c)
OTHER AGENCIES
CASINO CONTROL COMMISSION
Casino License Fees: rulemaking petition ..... 933(a)

INDEX OF PROPOSED RULES 934

Filing Deadlines

May 21 issue:
Proposals ..... April 25
Adoptions ..... May 7
June 4 issue:
Proposals ..... May 9
Adoptions ..... May 21
June 18 issue:
Proposals ..... May 22
Adoptions ..... June 4