You're viewing an archived copy from the New Jersey State Library.

NEW JERSEY REGISTER

0100330 000 9
EDUCATION, DEPARTMENT OF
DIV LIBRARY, ARCHIVES, & HISTORY
CN 520
TRENTON NJ 08625 INTER-OFFICE

THE JOURNAL OF STATE AGENCY RULEMAKING

VOLUME 27 NUMBER 3
February 6, 1995 Indexed 27 N.J.R. 411-606
(Includes adopted rules filed through January 13, 1995)

MOST RECENT UPDATE TO NEW JERSEY ADMINISTRATIVE CODE: NOVEMBER 21, 1994
See the Register Index for Subsequent Rulemaking Activity.

NEXT UPDATE: SUPPLEMENT DECEMBER 19, 1994

RULEMAKING IN THIS ISSUE

EXECUTIVE ORDERS

OFFICE OF THE GOVERNOR
Executive Order No. 30 (1995): Advisory Panel on School Vouchers ..... 413(a)
Executive Order No. 31 (1995): Tribute to Senator Walter Rand ..... 413(b)

RULE PROPOSALS

Interested persons comment deadline 412

ADMINISTRATIVE LAW
Agency rulemaking: Federal standards ..... 414(a)
Agency rulemaking: document copying fees ..... 416(a)
EDUCATION
Public testimony session: equivalency and waiver process ..... 416(b)
Special Education: least restrictive environment; program options ..... 416(c)
ENVIRONMENTAL PROTECTION
Coastal zone management ..... 417(a)
HEALTH
Communicable diseases ..... 420(a)
HUMAN SERVICES
Division of Mental Health and Hospitals: client liaison services ..... 429(a)
Division of Youth and Family Services: capital funding program for community-based facilities ..... 431(a)
Division of Youth and Family Services: utilization of family day care providers ..... 432(a)
Division of Youth and Family Services: reasonable efforts; reasonable and diligent efforts; necessary activities to achieve a case goal ..... 433(a)
CORRECTIONS
Inmate prohibited acts: refusal to register as sex offender ..... 436(a)
Release of juvenile records ..... 436(b)
INSURANCE
Automobile physical damage claims ..... 437(a)
Small Employer Health Benefits Program: Board authorization of assessments and expenditure of program funds ..... 438(a)
Small Employer Health Benefits Program: public hearing on Board authorization of assessments and expenditure of program funds ..... 438(b)
Small Employer Health Benefits Program: policy forms; compliance and variability rider ..... 439(a)
LAW AND PUBLIC SAFETY
Division of Motor Vehicles: motorized bicycles ..... 440(a)
Division of State Police: motor vehicle race track rules . 445(a)
Thoroughbred racing: coupled horses; limitation of entries by trainers ..... 464(a)
Harness racing: entries; limitations of entries by trainers ..... 466(a)
Violent Crimes Compensation Board: award of additional counseling sessions ..... 467(a)
TRANSPORTATION
Speed limit zone along Grove Street-Haddonfield Road-Route 70 connector ramp in Cherry Hill ..... 468(a)
Speed limit zone along Penn Avenue-Route 70 connector ramp in Cherry Hill ..... 468(b)
Speed limit zone along Park Boulevard-Route 70 connector ramp in Cherry Hill ..... 469(a)
TREASURY-GENERAL
Alternate Benefit Program: enrollment eligibility; transfers from another State retirement system ..... 469(b)

(Continued on next page)

You're viewing an archived copy from the New Jersey State Library.

INTERESTED PERSONS

Interested persons may submit comments, information or arguments concerning any of the rule proposals in this issue until **March 8, 1995.** Submissions and any inquiries about submissions should be addressed to the agency officer specified for a particular proposal.

On occasion, a proposing agency may extend the 30-day comment period to accommodate public hearings or to elicit greater public response to a proposed new rule or amendment. An extended comment deadline will be noted in the heading of a proposal or appear in a subsequent notice in the Register.

At the close of the period for comments, the proposing agency may thereafter adopt a proposal, without change, or with changes not in violation of the rulemaking procedures at N.J.A.C. 1:30-4.3. The adoption becomes effective upon publication in the Register of a notice of adoption, unless otherwise indicated in the adoption notice. Promulgation in the New Jersey Register establishes a new or amended rule as an official part of the New Jersey Administrative Code.

RULEMAKING IN THIS ISSUE—Continued

TREASURY-TAXATION
- Corporation Business Tax: doing business in New Jersey ..... 471(a)
- Corporation Business Tax: priority of tax credits ..... 472(a)
- Public Utility Tax: expression of tax rates; Municipal Purposes Tax Assistance Fund ..... 473(a)
- Sales and Use Tax: sales for resale ..... 474(a)
- Gross Income Tax: partners and partnerships ..... 475(a)
- Savings Institution Tax Act rules ..... 479(a)

ELECTION LAW ENFORCEMENT COMMISSION
- Candidacy contribution reporting and limits: change of public hearing date ..... 480(a)

RULE ADOPTIONS

AGRICULTURE
- Animal health: biological products for diagnostic or therapeutic purposes ..... 481(a)

PERSONNEL
- Layoffs ..... 482(a)

COMMUNITY AFFAIRS
- Homelessness Prevention Program ..... 483(a)

ENVIRONMENTAL PROTECTION
- Shellfish growing water classifications ..... 484(a)
- Marine fisheries management: winter flounder, bluefish, weakfish, Atlantic sturgeon, lobster ..... 487(a)
- Air administrative procedures and penalties: administrative correction ..... 498(a)
- Registration fees for non-ionizing radiation producing sources: administrative correction ..... 498(b)

HUMAN SERVICES
- Department instructional staff: tenure status ..... 499(a)
- Division of Developmental Disabilities: administrative correction regarding placement appeals ..... 499(b)
- Manual of Requirements for Child Care Centers ..... 499(c)

CORRECTIONS
- Bureau of Parole: policies and procedures ..... 550(a)

INSURANCE
- Admission requirements for foreign and alien life and health insurers ..... 559(a)
- Insurance producers and limited insurance representatives: marketing conduct standards ..... 562(a)
- Small Employer Health Benefits Program: optional benefit riders ..... 565(a)
- Small Employer Health Benefits Program: Board membership ..... 585(a)

LABOR
- Services excluded from coverage by Unemployment Compensation Law ..... 501(a)

PUBLIC UTILITIES
- Business Energy Improvement Program ..... 503(a)
- Energy Facility Review Board ..... 503(b)
- Periodic reporting of energy information by energy industries ..... 504(a)

TRANSPORTATION
- Federal Aid Urban System Substitution Program: county and municipal aid ..... 504(b)
- Transportation Trust Fund Authority Act: municipal fund for road and bridge improvement projects ..... 504(c)
- Speed limit zones along Route 179 in West Amwell Township ..... 505(a)
- Handicapped parking along Route 57 in Washington Borough, Warren County ..... 505(b)
- No stopping or standing along Route 71 in Bradley Beach Borough ..... 505(c)
- Bus stop on U.S. 206 in Princeton Township ..... 506(a)
- Drawbridge usage along Route 152 in Atlantic County ..... 506(b)
- Turn prohibitions along Route 47 in Middle Township, Cape May ..... 506(c)
- Truck operations within State ..... 507(a)
- Transportation of hazardous materials ..... 509(a)
- Employer Trip Reduction Program tax credit ..... 521(a)
- Air safety and hazardous zoning ..... 525(a)

TREASURY-TAXATION
- Motor fuels taxes and retail sales of motor fuels ..... 535(a)

HIGHWAY AUTHORITY
- Garden State Parkway: administrative corrections regarding copy fees for records and reports ..... 548(a)

CASINO CONTROL COMMISSION
- Cash compliments based upon patron's actual loss ..... 549(a)
- Additional wager in pai gow poker ..... 549(c)
- Super Pan 9: temporary adoption of gaming rules ..... 549(b)

PUBLIC NOTICES

COMMUNITY AFFAIRS
- Homelessness Prevention Program: opportunity to comment on funds distribution ..... 587(a)

ENVIRONMENTAL PROTECTION
- Delaware and Raritan Canal State Park: public hearings on proposed exchange of lands ..... 588(a)

(Continued on page 606)

NEW JERSEY REGISTER

The official publication containing notices of proposed rules and rules adopted by State agencies pursuant to the New Jersey Constitution, Art. V, Sec. IV, Para. 6 and the Administrative Procedure Act, N.J.S.A. 52:14B-1 et seq. Issued monthly since September 1969, and twice-monthly since November 1981.

The New Jersey Register (ISSN 0300-6069) is published the first and third Mondays (Tuesday, if Monday is a holiday) of each month by OAL Publications of the Office of Administrative Law, CN 301, Trenton, New Jersey 08625. Telephone: (609) 588-6606. Subscriptions, payable in advance, are one year, $125 ($215 by First Class Mail); back issues when available, $15 each. Make checks payable to OAL Publications.

POSTMASTER: Send address changes to New Jersey Register, CN 301, Trenton, New Jersey 08625. Second Class Postage paid in South Plainfield, New Jersey.

Copyright 1995 New Jersey Office of Administrative Law

You're viewing an archived copy from the New Jersey State Library.

EXECUTIVE ORDERS

(a)

OFFICE OF THE GOVERNOR
Governor Christine Todd Whitman
Executive Order No. 30(1995)
Advisory Panel on School Vouchers

Issued: January 10, 1995.
Effective: January 10, 1995.
Expiration: Indefinite.

WHEREAS, tuition vouchers have been proposed to achieve education reform by providing an incentive to schools to improve and by allowing parents greater freedom to choose the schools that meet their children's needs; and

WHEREAS, I have proposed a limited tuition voucher pilot program to meet the legitimate needs of parents and students through increased flexibility; and

WHEREAS, the legislative leadership in both Houses has indicated a desire for further study and deliberation on this important issue; and

WHEREAS, the legislation to accomplish these objectives should be proposed with the active participation of concerned parties on a bipartisan basis;

NOW, THEREFORE, I, CHRISTINE TODD WHITMAN, Governor of the State of New Jersey, by virtue of the authority vested in me by the Constitution and by the Statutes of this State, do hereby ORDER and DIRECT:

1. There is hereby established the Advisory Panel on School Vouchers. The Advisory Panel shall be representative of a diversity of views and shall consist of fifteen (15) members as follows:

a. Seven (7) members, including the chair and vice chair, appointed by the Governor, no more than four of whom shall be of the same political party;

b. The Attorney General or her designee and the Commissioner of Education or his designee shall serve as ex officio members;

c. Three (3) members appointed by the President of the Senate, no more than two of whom shall be of the same political party;

d. Three (3) members appointed by the Speaker of the General Assembly, no more than two of whom shall be of the same political party.

2. The Advisory Panel shall assist the Governor and Legislature in proposing legislation to implement a tuition school voucher program based upon the objectives set forth below.

3. The proposed legislation should address the following objectives:

a. The proposal should be limited in scope and viewed as a pilot program so as to determine the feasibility and impact of expanding the program statewide;

b. The proposal must recognize the fiscal constraints of the State and be consistent with budgetary limitations; and

c. The proposal must include a mechanism and criteria to adequately and impartially evaluate the pilot program.

4. The Advisory Panel should also examine the fiscal, legal and administrative issues that may arise concerning implementation of the pilot program.

5. The Advisory Panel shall present its recommendations and proposed legislation no later than one year from the date of this Order to allow adoption and implementation for the 1996 school year.

6. The Advisory Panel is authorized to call upon any department, offices or agencies of State government to provide such information, personnel and assistance as deemed necessary to discharge its responsibilities under this Order. Each department, officer, division and agency of this State is hereby required to cooperate with the Advisory Panel and to furnish it with such information, personnel and assistance as is necessary to accomplish the purpose of this Order.

7. The Advisory Panel shall hold at least three (3) public hearings as it discharges its responsibilities under this Order.

8. This Order shall take effect immediately.

(b)

OFFICE OF THE GOVERNOR
Governor Christine Todd Whitman
Executive Order No. 31(1995)
Tribute to Senator Walter Rand

Issued: January 10, 1995.
Effective: January 10, 1995.
Expiration: Indefinite.

WHEREAS, it is fitting and appropriate to honor the memory and mourn the passing of Senator Walter Rand; and

WHEREAS, born in Philadelphia, Pennsylvania, Senator Rand tirelessly devoted his life to serving his community and his State; and

WHEREAS, Senator Rand served the Camden Board of Education with distinction, first as an Assistant Secretary and Purchasing Agent and then as an elected member from 1971 to 1974; and

WHEREAS, in 1975, Senator Rand was elected to the General Assembly serving there until 1981, whereupon he was elected to the Senate; and

WHEREAS, Senator Rand served as Chairman of the Senate Transportation and Public Utilities Committee and was an expert on transportation issues; and

WHEREAS, among Senator Rand's many accomplishments during his nearly 20-year tenure in the Legislature, he sponsored the law creating the Transportation Trust Fund and the law which led to the creation of the South Jersey Transportation Authority; and

WHEREAS, it is with deep sadness that we mourn the loss of Senator Rand and extend our sincerest sympathies to his family and friends.

NOW, THEREFORE, I, CHRISTINE TODD WHITMAN, Governor of the State of New Jersey, by virtue of the authority vested in me by the Constitution and by the Statutes of this State, do hereby ORDER and DIRECT:

1. The flag of the United States of America and the flag of the State of New Jersey shall be flown at half-staff at all State departments, offices, agencies and instrumentalities during appropriate hours on Wednesday, January 11, 1995 in recognition and mourning of the passing of Senator Walter Rand.

2. This Order shall take effect immediately.

You're viewing an archived copy from the New Jersey State Library.

RULE PROPOSALS

ADMINISTRATIVE LAW

(a)

OFFICE OF ADMINISTRATIVE LAW

Rules on Agency Rulemaking
Federal Exceedance Standards; Executive Order No. 27(1994)
Proposed Amendments: N.J.A.C. 1:30-1.2, 3.1 and 4.1

Authorized By: Jeff S. Masin, Acting Director, Office of Administrative Law.

Authority: N.J.S.A. 52:14B-4, 52:14B-7 and 52:14F-5(f), (h) and (i).

Proposal Number: PRN 1995-103.

Submit written comments by March 8, 1995 to:
Jeff S. Masin, Acting Director
Office of Administrative Law
9 Quakerbridge Plaza, CN 049
Quakerbridge Road
Trenton, New Jersey 08625

The agency proposal follows:

Summary

The proposed amendments seek to implement Executive Order No. 27 issued by Governor Whitman on November 2, 1994. The Executive Order directs that agencies should consider applicable Federal standards when adopting new rules or amending or readopting existing rules and whether those analogous Federal standards sufficiently protect the health, safety and welfare of New Jersey citizens. The Order further directs that, as part of the formal rulemaking process, the public should be advised as to the promulgating agencies' conclusions about whether the analogous Federal standards sufficiently protect New Jersey citizens. If the agency determines that the Federal standards do not adequately protect the public the agency must explain its reasons for maintaining standards beyond those Federally required. The amendments set out the requirements agencies must follow during the formal rulemaking process in furtherance of Executive Order No. 27.

N.J.A.C. 1:30-1.2, Definitions, is amended to include a definition of Executive Order No. 27 (1994). The Order is commonly known as the "Federal standards" or "Federal exceedance" Executive Order.

N.J.A.C. 1:30-3.1, Notice of proposed rule, subsection (c) is amended to require that upon submission of a notice of proposal to the OAL the agency head certify that the Executive Order No. 27 analysis permits the public to understand the purposes and expected consequences of the rulemaking. Subsection (f) is also amended by adding a new paragraph 5 which outlines the requirements of the Order. Agencies must address whether or not the rulemaking is affected by any analogous Federal standards. If the rulemaking is not subject to Federal standards the agency must prepare a statement explaining why a Federal exceedance standard analysis is not applicable. If the rulemaking is subject to Federal standards, but does not exceed those standards, the agency must prepare a statement certifying that Federal standards have not been exceeded. If the rulemaking, however, contains standards or requirements that exceed those imposed by Federal law the agency must prepare an analysis which discusses the policy reasons for imposing a standard beyond that required by Federal law; a cost-benefit analysis that supports the agency's decision to impose standards that exceed those required by Federal law; and whether the standard sought to be imposed is achievable under current technology. The Federal exceedance analysis applies to any new, readopted or amended rule that may be necessary to implement, comply with or participate in any program established under Federal law or under a State statute that incorporates or refers to Federal law, standards or requirements. As part of the proposal notice submission, the agency head must certify that the analysis will permit the public to understand plainly the purposes and expected consequences of the rulemaking.

N.J.A.C. 1:30-4.1, Notice of adopted rule, subsection (c) is amended with the addition of paragraph 8 which requires an Executive Order No. 27 statement or analysis and agency head certification upon adoption. If no changes to the rule are made upon adoption, then the statement or analysis published with the proposal may be used. If there are changes upon adoption, however, the changes must be analyzed pursuant to the Order and a new statement or analysis must be prepared.

Social Impact

The proposed amendments directly affect State agencies at the time of proposing new rules and readopting or amending existing rules. All rule promulgating agencies are affected by these new requirements since they must now prepare either a statement of non-applicability or an analysis of why the rulemaking exceeds standards imposed by Federal law. Agency rulemaking staffs must determine whether a Federal standard is implicated in a rulemaking and consider the requirements imposed by the Executive Order and justify the imposition of a standard beyond that required by Federal law.

The public will benefit from the rulemaking requirements proposed here. The public will be advised at the time of proposal whether or not a rulemaking contains Federal requirements and, if it does, whether the agency imposed requirements exceed those imposed by Federal law. The agency must justify to the public why the greater agency standard is necessary to sufficiently protect the health, safety and welfare of New Jersey citizens. These requirements to adequately advise the public of the rulemaking's implications must be certified by the agency head, and must be delineated in such a way as to ensure a full understanding of the expected purposes and consequences on the part of the public. No impact on OAL, other than economic as discussed below, is anticipated.

Economic Impact

The proposed amendments may have an economic impact on State agencies during the rulemaking process in that agency staffs will be required to analyze a proposed rulemaking in light of the Federal exceedance requirements and prepare the necessary statement or analysis prescribed by these rules. Although an additional requirement at time of proposal and possibly upon adoption, the economic burden or cost to State agencies is not readily calculable as such depends on the specific nature of each rulemaking. While a direct economic impact on the public is not anticipated, the additional information will provide an improved basis for comment on proposed rulemakings. While neither area of increase is quantifiable in advance, OAL will experience staff costs resulting from the additional time needed to review the Executive Order No. 27 analyses/statements, and increased New Jersey Register publishing costs.

Executive Order No. 27 Statement

An Executive Order No. 27 analysis is not required because the rulemaking requirements of the OAL are dictated by the New Jersey Administrative Procedure Act, N.J.S.A. 52:14B-1 et seq., and are not subject to any Federal requirements or standards.

Regulatory Flexibility Statement

A regulatory flexibility analysis is not required because the proposed amendments affect State agencies during the rule promulgation process and as such do not impose reporting, recordkeeping or other compliance requirements on small businesses as that term is defined in N.J.S.A. 52:14B-16 et seq.

Full text of the proposal follows (additions indicated in boldface **thus**; deletions indicated in brackets [thus]):

1:30-1.2 Definitions

The following words and terms, when used in this chapter, shall have the following meanings, unless the context clearly indicates otherwise.

. . .

"Executive Order No. 27(1994)" means the 27th executive order issued by Governor Whitman in 1994. Commonly referred to as the "Federal standards" provision, the executive order requires an explanation or analysis as to whether a rule exceeds standards or requirements imposed by Federal law. Federal law includes statutes, rules, regulations, orders, directives or guidelines.

. . .

You're viewing an archived copy from the New Jersey State Library.

1:30-3.1 Notice of proposed rule

(a)-(b) (No change.)

(c) The notice of proposed rule shall include the name of the adopting agency head and agency [and], the signature of the adopting agency head or other authorized signatory as provided in N.J.A.C. 1:30-2.4 **and a certification by the agency head that the analysis required by Executive Order No. 27 permits the public to understand accurately and plainly the purpose and expected consequences of the new, readopted or amended rule.**

(d)-(e) (No change.)

(f) The notice of proposed rule shall include a brief statement of the proposed rule, which shall include:

1. A summary statement of the proposed rulemaking with a clear and concise explanation of its purpose and effect. The summary shall describe, detail and identify:

i. Who and what will be affected by the proposal;

ii. How, when and where the effect will occur;

iii. What the proposal prescribes, proscribes or otherwise mandates;

iv. What enforcement mechanisms and sanctions may be involved; and

v. Any other relevant or pertinent information.

2. A social impact statement which describes the expected social impact of the proposed rulemaking on the public, particularly on any segments of the public proposed to be regulated, and including any proposed or expected differential impact on different segments of the public, including the rulemaking action, and justification therefor.

3. An economic impact statement which describes the expected costs, revenues, and other economic impact upon governmental bodies of the State, and particularly any segments of the public proposed to be regulated.

4. A regulatory flexibility analysis or statement.

i. All rules which impose reporting, recordkeeping or other compliance requirements on small businesses shall include a regulatory flexibility analysis which describes the methods utilized to minimize any adverse economic impact on small businesses.

ii. "Small business" means any business which is resident in New Jersey, independently owned and operated, not dominant in its field, and which employs fewer than 100 full time employees.

iii. Rules which do not impose reporting, recordkeeping or other compliance requirements on small businesses shall be accompanied by a regulatory flexibility statement which indicates that no such requirements are imposed, and the basis for that finding.

iv. Rules which impose reporting, recordkeeping or other compliance requirements on small businesses shall include in the regulatory flexibility analysis with as much quantification as is practical or reliable, the following:

(1) A description of the types and an estimate of the number of small businesses to which the rule will apply.

(2) A description of the reporting, recordkeeping and other compliance requirements, and the kinds of professional services likely to be needed to comply with the requirements.

(3) An estimate of the initial capital costs, and an estimate of the annual compliance costs, with an indication of any likely variation on small businesses of differing types and sizes.

(4) An indication of how the rule is designed to minimize any adverse economic impact on small businesses.

v. To indicate how the rule is designed to minimize any adverse economic impact on small businesses, the following approaches shall be considered in the regulatory flexibility analysis:

(1) The establishment of differing compliance or reporting requirements or timetables that take into account resources available to small businesses;

(2) The use of performance rather than design standards; and/or

(3) An exemption from coverage by all or part of the rule, provided that the public health, safety or general welfare is not endangered. A finding of endangerment shall explain the relationship between the regulatory requirement that cannot be exempted and the public health, safety or general welfare.

vi. The regulatory flexibility analysis in (f)4iv and v above shall be required whenever small businesses comprise part of, or the entire regulated group on which reporting, recordkeeping or other compliance requirements are imposed.

5. An Executive Order No. 27(1994) statement or analysis which addresses whether the rules in the notice of proposal contain standards or requirements that exceed standards or requirements imposed by Federal law. The analysis shall apply to any new, readopted or amended rule under the authority of or in order to implement, comply with or participate in any program established under Federal law or under a State statute that incorporates or refers to Federal law, standards or requirements.

i. Rules which are not subject to any Federal standards or requirements shall be accompanied by a statement to that effect and that a Federal exceedance analysis is not applicable to the rulemaking.

ii. Rules which contain standards that are the same as Federal standards or requirements shall be accompanied by a statement which states that the requirements of the rule are the same as those imposed by Federal law.

iii. Rules which exceed standards or requirements imposed by Federal law, notwithstanding the Federal government's determination that lesser standards or requirements are appropriate, shall be accompanied by an analysis which contains the following:

(1) A discussion of the agency's policy reasons for imposing standards or requirements which exceed those required by Federal law;

(2) A cost-benefit analysis that supports the agency's decision to impose standards or requirements which exceed those required by Federal law; and

(3) A discussion which supports the fact that the agency standard or requirement to be imposed is achievable under current technology.

iv. The agency head shall certify that the analysis permits the public to understand accurately and plainly the purposes and expected consequences of the new, readopted or amended rule.

(g)-(i) (No change.)

1:30-4.1 Notice of adopted rule

(a) When an agency adopts a proposed rule, the agency shall prepare a "notice of adopted rule" and submit the notice to the OAL. The notice of adopted rule shall comply with the requirements of this section.

(b) The agency shall complete and submit to the OAL a Certificate of Proposal, Adoption and Promulgation (form OAL/APF-1) signed by the adopting agency head, or other person authorized by statute to adopt rules, that the rule was duly adopted according to law and in compliance with the requirements of the Administrative Procedure Act, P.L. 1968, c.410, as amended by P.L. 1978, c.67 and P.L. 1981, c. 21, and of this chapter.

(c) The notice of adopted rule shall also contain:

1. The publication date of the notice of proposed rule;

2. The date of adoption, the name of the agency and the name and signature of the adopting agency head or any other person authorized by statute to adopt agency rules;

3. The date the notice of adopted rules is filed with the OAL;

4. The effective date of the rule;

5. The operative date of the rule if later than the date of Register promulgation;

6. The expiration date of the rule pursuant to Executive Order No. 66 (1978) or an exemption from the Order with reasons for the exemption;

7. A summary of any changes between the rule as proposed and adopted, and the reasons for the changes;

8. An Executive Order No. 27(1994) statement or analysis and agency head certification as required by N.J.A.C. 1:30-3.1(f)5.

i. If there are no changes upon adoption, the statement or analysis published as part of the proposal may be included;

ii. If there are changes upon adoption, the changes must be analyzed and a new statement or analysis prepared pursuant to the provisions of the Order;

You're viewing an archived copy from the New Jersey State Library.

[8.]**9.** Except for commenters requesting confidentiality or commenters whose confidentiality is protected by law, the names and affiliations, if any, of all persons who submitted oral or written comments, arguments, data and views concerning the proposed rule;

[9.]**10.** A summary of the comments, arguments, data and views received and points of controversy developed during the rulemaking proceeding; the reasons for adopting the public comments accepted; and the reasons for rejecting the public comments rejected; and

[10.]**11.** The text of any changes between the rule as proposed and as adopted, specifically indicating additions and deletions.

(a)

OFFICE OF ADMINISTRATIVE LAW

Rules on Agency Rulemaking
Copies of Documents; Fees
Proposed Amendment: N.J.A.C. 1:30-1.9

Authorized By: Jeff S. Masin, Acting Director, Office of Administrative Law.

Authority: N.J.S.A. 52:14B-7, 52:14F-5(f) and 47:1A-2.

Proposal Number: PRN 1995-93.

Submit comments by March 8, 1995 to:
Jeff S. Masin, Acting Director
Office of Administrative Law
9 Quakerbridge Plaza, CN 049
Quakerbridge Road
Trenton, NJ 08625

The agency proposal follows:

Summary

The Office of Administrative Law (OAL) proposes to amend N.J.A.C. 1:30-1.9(a) to conform the per page copy fees to be charged by the Division of Administrative Rules and Publications to those set forth in N.J.S.A. 47:1A-2. Specifically, the per page copy fee for the first through 10th page will increase from $.50 to $.75; for the 11th through 20th page, from $.25 to $.50; and for all pages over 20, from $.10 to $.25.

Social Impact

OAL does not foresee any social impact from the proposed copy fee increases; the only impact anticipated is economic, as discussed below. The nominal amounts of the fee increases should not affect access to copies.

Economic Impact

The proposed amendment will result in individuals and entities requesting copies of documents from the Division of Administrative Rules and Publications paying $.25 more per page for the first 20 pages, and $.15 more for each page thereafter. These increases are necessary in order to meet the administrative and material costs to OAL of providing copies, in keeping with agency policy to conform to the N.J.S.A. 47:1A-2 fee allowances.

Executive Order No. 27 Statement

The subject matter of this proposed amendment is not subject to any Federal standards or requirements. Fees for copies of State records are governed by N.J.S.A. 47:1A-2. Therefore, a Federal exceedance analysis is not applicable to this rulemaking.

Regulatory Flexibility Analysis

The proposed amendment imposes no reporting or recordkeeping requirements on small businesses, as defined under the Regulatory Flexibility Act, N.J.S.A. 52:14B-16 et seq. Persons and entities, including small businesses, seeking copies of documents from the Division of Administrative Rules and Publications will be required to pay the increased per page fee. Capital cost to the copy purchaser will vary with the number of pages ordered; payment of the increased fees will not require the employment of professional services. As the fee increases are intended to cover the cost of providing copies, which cost is not related to the business size of the copy requester, no lesser fees or exemptions are provided for small businesses.

Full text of the proposal follows (additions indicated in boldface **thus**; deletions indicated in brackets [thus]):

1:30-1.9 Copies of documents; fees

(a) Any person may obtain copies of filed documents from the Division of Administrative Rules and Publications pursuant to the provisions of N.J.S.A. 47:1A-2 upon payment of a fee as follows:

1. First page to 10th page: [$.50] **$.75** per page;
2. Eleventh page to 20th page: [$.25] **$.50** per page;
3. All pages over 20: [$.10] **$.25** per page.

(b) (No change.)

EDUCATION

(b)

STATE BOARD OF EDUCATION

Notice of Public Testimony Session
February 15, 1995

Take notice that the following agenda item will be scheduled for future consideration by the New Jersey State Board of Education. Pursuant to the policy of the New Jersey State Board of Education, **a public testimony session** will be held for the purpose of receiving public comment on Wednesday, February 15, 1995 beginning at 3:00 P.M. in the eighth floor training room, Department of Education, 225 East State Street, Trenton, New Jersey.

To reserve time to speak, call the State Board Office at (609) 292-0739 by 3:00 P.M., Friday, February 10, 1995.

Rule Proposal: N.J.A.C. 6:3A, Equivalency and Waiver Process.

(c)

STATE BOARD OF EDUCATION

Special Education
Least Restrictive Environment; Program Options
Proposed Amendments: N.J.A.C. 6:28-2.10 and 4.2

Authorized By: State Board of Education, Leo Klagholz, Secretary, State Board of Education and Commissioner, Department of Education.

Authority: N.J.S.A. 18A:4-15, 18A:7A-1 et seq., 18A:7B-2 et seq., 18A:7C-1 et seq., 18A:39-1, 18A:48-8, U.S.P.L. 93-112, sec. 504, 94-142 and 99-457.

Proposal Number: PRN 1995-88.

Submit written comments by March 8, 1995 to:
Sharon A. McAtee, Director
State Board Office
New Jersey Department of Education
225 East State Street, CN 500
Trenton, New Jersey 08625-0500

The agency proposal is attached.

Summary

On September 30, 1994 the Department of Education received conditional approval of New Jersey's State Plan for Special Education by the United States Department of Education through its Office of Special Education and Rehabilitative Services (OSERS). As a condition of the approval, OSERS has directed the New Jersey Department of Education to propose these specific amendments to the special education rules to bring the rules into compliance with Federal requirements.

N.J.A.C. 6:28-2.10(a)6 is being amended to include additional factors which must be considered when making a decision to place a pupil with educational disabilities in the regular classroom. The requirement to consider the ability of the program to implement the individualized education program (IEP) is being eliminated. This requirement is redundant as placement is based on the pupil's IEP.

N.J.A.C. 6:28-2.10(a)7 is being amended to clarify that when the IEP does not describe any restrictions, the pupil is educated in the school he or she would attend if not educationally disabled. The phrase "in the regular school program" is being deleted. The amended requirement will comply fully with the Federal regulation.

N.J.A.C. 6:28-4.2(a) is being amended to clarify that the full continuum of alternative placements is available to pupils with educational dis-

You're viewing an archived copy from the New Jersey State Library.

abilities ages three through 21. An early intervention program is being added to the list of alternative placements in subsection (a). Subsection (b), which specified the categories of alternative placements available to preschool aged children with educational disabilities, is being deleted. With the clarification of subsection (a) that a full continuum of alternative placements is available to pupils with disabilities from three years to 21 years and the inclusion of early intervention programs, the list is comprehensive. Therefore, subsection (b) is redundant.

Social Impact

The proposed amendments are a clarification of existing requirements and in most instances no change in practice is anticipated. In the instance of least restrictive environment, the amendments will provide clarification regarding the responsibilities of districts and the rights of parents and pupils. The proposed amendments regarding the full continuum of alternative placements clarify that all program options are available to preschoolers with educational disabilities. The same program options that were available to preschoolers will continue to be available. No further requirements are being added. However, districts where the full continuum of services was not available to preschoolers, may perceive added responsibility.

Economic Impact

State categorical aid is provided to local districts for the provision of special education programs and services. State and Federal Aid figures are listed below.

A schedule of State categorical aid from fiscal year 1987 to 1995 is given below.

State Aid Appropriated

1987	1995
$250,684,000	$582,500,000

Federal aid to New Jersey from 1987 to 1995 is as follows:

1987	1995
$56,308,254	$89,755,452

It is not anticipated that the amendments to the least restrictive environment or program options will have an economic impact as they are designed to provide clarification of existing Federal mandates.

Executive Order No. 27 Statement

As a requirement of the conditional approval of New Jersey's State Plan for Special Education, the United States Department of Education through OSERS has directed the New Jersey Department of Education to propose these specific amendments. The release of New Jersey's Federal allocation of approximately $77 million is dependent upon compliance with the Federal directive. These proposed amendments comply with the requirements specified by OSERS and do not exceed Federal regulations.

Regulatory Flexibility Analysis

These proposed amendments apply to public schools and to approved private schools for the handicapped and clinics and agencies which could be considered a small business as that term is defined by the Regulatory Flexibility Act, N.J.S.A. 52:14B-16 et seq. The proposed amendments do not change any existing reporting, recordkeeping or compliance requirements for private schools or clinics or agencies. Any costs incurred in compliance with the requirements of these amendments would be reimbursed to the schools by inclusion in their tuition which is paid through State and local district funds. In these instances, the Department is unable to change these requirements based on business size because these agencies serve pupils with educational disabilities from public schools with both Federal and State standards that are similar to public schools. The Department is unable to make the requirements different for that reason and, further, believes that the rules are necessary and not so burdensome as to require differing standards.

Full text of the proposal follows (additions indicated in boldface **thus**; deletions indicated in brackets [thus]):

6:28-2.10 Least restrictive environment

(a) Each public agency of education shall ensure that:

1.-5. (No change.)

6. Consideration is given to:

i. [The potentially beneficial or harmful effects which a placement may have on the pupil with educational disabilities or the other pupils in the class, and/or] **Whether the school district has made reasonable efforts to accommodate the child in a regular classroom with supplementary aids and services;**

ii. [The ability of the program to implement the pupil's individualized education program;] **A comparison of the benefits provided in a regular class and the benefits provided in a special education class; and**

iii. The potentially beneficial or harmful effects which a placement may have on the pupil with educational disabilities or the other pupils in the class.

7. When the individualized education program does not describe specific restrictions, the pupil is educated in the [regular school program provided in the] school he or she would attend if not educationally disabled; and

8. (No change.)

6:28-4.2 Program options

(a) A full continuum of alternative placements shall be available to meet the needs of pupils with educational disabilities [for special education and/or related services] **ages three through 21.** Educational program options include the following:

1.-8. (No change.)

9. An accredited nonpublic school which is not specifically approved for the education of pupils with educational disabilities according to N.J.A.C. 6:28-6.5; [and]

10. Instruction in other appropriate settings according to N.J.A.C. 6:28-1.1(d) and (e)[.]**; and**

11. An early intervention program (which is under contract with the Department of Health) in which the child has been enrolled for the balance of the school year in which the child turns age three.

[(b) A district board of education shall provide a program for a preschool handicapped pupil on one of the following settings:

1. An approved public or private program;

2. An accredited nonpublic school; or

3. An early intervention program (which is under contract with the Department) in which the child has been enrolled for the balance of the school year in which the child turns age three.]

ENVIRONMENTAL PROTECTION

(a)

ENVIRONMENTAL REGULATION

Rules on Coastal Zone Management

Proposed Readoption: N.J.A.C. 7:7E

Authorized By: Robert C. Shinn, Jr., Commissioner, Department of Environmental Protection.

Authority: N.J.S.A. 13:19-1 et seq., 13:9A-1 et seq., 12:5-1 et seq., and 13:9B-1 et seq.

DEP Docket Number: 54-94-12/106.

Proposal Number: PRN 1995-73.

Submit written comments by March 8, 1995 to:

Kimberly Hunter, Esq.
Administrative Practice Officer
Department of Environmental Protection
CN 402
Trenton, New Jersey 08625

The agency proposal follows:

Summary

Under Executive Order No. 66(1978), the Rules on Coastal Zone Management at N.J.A.C. 7:7E are scheduled to expire on July 24, 1995. As required by Executive Order No. 66, the Department of Environmental Protection (Department) has reviewed these rules and has determined for the reasons that follow that the rules are necessary, reasonable, and proper for the purpose for which they were originally promulgated. Accordingly, the Department is now proposing to readopt these rules.

The Rules on Coastal Zone Management (N.J.A.C. 7:7E) represent the State's substantive standards for the use and development of resources in the New Jersey coastal zone. The existing rules at N.J.A.C. 7:7E are administered by the Department of Environmental Protection's

You're viewing an archived copy from the New Jersey State Library.

Land Use Regulation Program, formerly the Division of Coastal Resources, and are used to review permit applications submitted pursuant to the procedures contained in the Coastal Permit Program rules at N.J.A.C. 7:7. The rules at N.J.A.C. 7:7E constitute the State's coastal Zone Management Plan and implement the Coastal Area Facility Review Act (CAFRA), N.J.S.A. 13:19-1 et seq., the Wetlands Act of 1970, N.J.S.A. 13:9A-1 et seq., and the Waterfront Development Law, N.J.S.A. 12:5-3. In addition, the rules apply to decisions regarding consistency of proposed Federal actions with the State's Coastal Zone Management Plan under Section 307(c)(1) of the Federal Coastal Zone Management Act, 16 U.S.C. 1451 et seq., as well as to decisions on water quality certifications under section 401 of the Federal Clean Water Act, 33 U.S.C. 1251 et seq. The rules are also used as a basis for making recommendations to the Tidelands Resource Council on applications for riparian grants, leases and licenses, and are applied in other departmental decision making processes in accordance with N.J.A.C. 7:7E-1.2(e).

The Rules on Coastal Zone Management were first approved by the Federal government in 1980, and have been amended numerous times since then. In response to the CAFRA amendments which were enacted in July 1993 and which became effective July 19, 1994 (P.L. 1993, c.190), the Department adopted substantial amendments to the Rules on July 18, 1994. The 1994 amendments included codification of existing Departmental practices and guidelines, incorporation of specific design standards and specifications, and the repeal of 19 sections to eliminate duplicative or unnecessary regulations.

Due to the extensive scope of these recently adopted amendments to N.J.A.C. 7:7E, the Department has decided it is not necessary to propose any additional amendments at this time. However, the Department intends in the near future to propose amendments to N.J.A.C. 7:7. N.J.A.C. 7:7 contains the procedures to be followed when applying for a permit under CAFRA, the Wetlands Act of 1970 (coastal wetlands) and the Waterfront Development Law. N.J.A.C. 7:7 also contains general permits and permits-by-rule for development that is regulated under CAFRA. The proposed amendments to N.J.A.C. 7:7 are intended to simplify the application process for certain smaller regulated developments in the State's coastal zone.

In accordance with the intent behind Executive Order 66(1978), this proposed readoption without change will extend the expiration date of N.J.A.C. 7:7E for five years.

A summary of the provisions of each subchapter of N.J.A.C. 7:7E follows:

Subchapter 1, Introduction, sets forth the purpose, jurisdiction and scope of the rules, describes the coastal decision-making process, contains definitions of terms, and discusses the foundations for requiring mitigation.

Subchapter 2, Location, Use and Resource Rules, defines and classifies all land and water locations into a General Land Area and one or more Special Areas.

Subchapter 3, Special Areas, divides environmentally sensitive areas into Special Water Areas (N.J.A.C. 7:7E-3.3 through 3.15), Special Water's Edge Areas (N.J.A.C. 7:7E-3.16 through 3.32), Special Land Areas (N.J.A.C. 7:7E-3.33 through 3.35) and Coastwide Special Areas (N.J.A.C. 7:7E-3.36 through 3.48). This chapter describes the 48 types of coastal areas which merit focused attention and special management rules and contains standards for beach and dune maintenance, information required in wetland mitigation proposals and guidelines for assessing threatened wildlife species in Environmental Impact Assessments.

Special Water Areas include shellfish habitat, surf clam areas, prime fishing areas, finfish migratory pathways, submerged vegetation habitat, navigation channels, canals, inlets, marina moorings, ports, submerged infrastructure routes shipwrecks and artificial reefs, wet borrow pits, and intertidal subtidal shallows. Special Water's Edge Areas include dunes, overwash areas, coastal high hazard areas, erosion hazard areas, barrier island corridor, bay islands, beaches, filled water's edges, existing lagoon edges, flood hazard areas, wetlands, wetland buffers, coastal bluffs, and intermittent stream corridors. Special Land Areas include farmland conservation areas and steep slopes. Coastwide Special Areas include historic and archaeological resources, specimen trees, endangered or threatened wildlife or vegetation species habitats, critical wildlife habitat, public open space, special hazard areas, excluded federal lands, special urban areas, Pinelands National Reserve and Pinelands Protection Areas, Hackensack Meadowlands District, wild and scenic river corridors, geodetic control reference marks, and Hudson River waterfront area.

Subchapter 4, General Water Areas, defines General Water Types, assigns General Water Area rules to each water type and summarizes the rationale and intent of the rules.

Subchapter 5, General Land Areas, describes the criteria (coastal growth rating, environmental sensitivity rating and development potential) to be used in determining a site's acceptable intensity of development for all mainland features located upland of special water's edge areas, including those areas that are also Special Areas, where both the General Land Area and Special Area rules must be complied with.

Subchapter 6, General Location Rules, outlines the process of determining the most acceptable route for linear development (that is, roads and utility lines) and discusses secondary impacts and the requirements for a secondary impact analysis.

Subchapter 7, Use Rules, lists sets of rules for particular uses of coastal resources (including housing, resorts, marinas, energy, transportation, mining, ports, commercial facilities and dredging) and contains rules and conditions addressed to particular developments. In general, this subchapter introduces conditions which must be satisfied in addition to the Location Rules (subchapters 2 through 6) and the Resource Rules (subchapter 8).

Subchapter 8, Resource Rules, contains rules and conditions used to review a proposed development in terms of its effects on various resources of the built and natural environment of the coastal zone, both at the proposed site as well as in its surrounding region and contains standards to which proposed development must adhere.

Social Impact

The proposed readoption of the Rules on Coastal Zone Management will have a positive social impact by maintaining the Department's ability to protect and enhance the resources of the coastal zone and to steer development into the most appropriate locations for the benefit of coastal residents, businesses and visitors. The maintenance and enhancement of coastal resources will provide clean waters for recreational uses such as boating, swimming, fishing and shellfishing. In addition, enhancement of sensitive beaches and dunes will provide protection from coastal storms and flooding, thereby minimizing the potential for loss of life and damage to private property.

The proposed readoption of the rules will allow the Department to continue in full force and effect the beneficial environmental programs resulting from the original promulgation and implementation of the Rules. The proposed readoption of the Rules would provide the Department with the regulatory structure necessary to enforce its responsibilities under the Coastal Area Facility Review Act, the Wetlands Act of 1970 (coastal wetlands) and the Waterfront Development Law.

The implementation of these rules has increased public awareness of the Coastal Zone and its problems. Issues such as public access to the waterfront, shellfish habitat protection, wetlands protection and beach preservation have all been the subject of recent public discussions and debate. The Coastal Management Program has not been the only cause of this concern, but it has sponsored and will continue to promote educational programs and publications, research, pilot projects, and revisions to State policies to increase public awareness and use of the Coastal Zone.

Economic Impact

The proposed readoption of the Rules on Coastal Zone Management will have a positive economic benefit through the protection and enhancement of coastal resources, and the tourism industry which is dependent on these resources. Although there are costs associated with demonstrating compliance with this chapter, including possible consultant fees for compliance statements, plan preparation costs, etc. these costs will not increase above those previously incurred. The coastal economy is driven by the tourism industry, which is in turn dependent on clean waters, clean beaches accessible to all members of the public, productive fish and shellfish resources and other resource enhancement efforts.

The proposed readoption of the rules will also provide an economic benefit in that permit applicants will continue to rely on the guidance provided in the rules in the preparation of permit applications pursuant to the Coastal Area Facility Review Act, the Wetlands Act of 1970 (coastal wetlands) and the Waterfront Development Law. These rules provide specific standards and conditions which apply to development requiring a coastal permit, and are used by permit applicants in the design of projects and in the preparation of permit applications and environmental impact statements.

The coastal area of the State has been the subject of comprehensive land use management for a number of important reasons. The coastal

You're viewing an archived copy from the New Jersey State Library.

ecosystem is a fragile and unique network of beaches and the ocean, tidal and inland wetlands, floodplains, estuarine areas, bays, streams and stream corridors, vegetation communities, and wildlife habitats. Approximately 35 percent of the State's population presently inhabits areas in or immediately surrounding the coastal area. Millions of people visit the New Jersey shore contributing an estimted $10.56 billion annually to the State's economy. The recreational and commercial fisheries contribute $736 million to the State's economy each year (based on 1991 data). Both the commercial fisheries and the recreational use of the State's coastal zone require good water quality and an aesthetically pleasing environment. The New Jersey Coastal Zone Management Program is the mechanism for balancing the competing requirements of human activities and for protecting and enhancing natural features of the coastal area, thereby maximizing its social, economic and environmental value. These rules are essential to the Department's continued protection of these resources, which are a vital component of the State's tourism economy.

Environmental Impact

The proposed readoption of the Rules will have a positive environmental impact by continuing to allow the Department to implement the State and Federal Coastal Zone Management, coastal wetlands and Waterfront Development legislation, all of which were adopted to protect coastal resources. The protection and enhancement of these resources will be furthered by this proposed readoption, which will provide for appropriate development in the environmentally sensitive coastal zone. These Rules have provided a balanced means of protecting the Coastal Zone by allowing careful development that is compatible with resource protection within the coastal area. The proposed readoption will allow this level of protection to continue.

Comparison with Federal Law

Governor Whitman's Executive Order 27 requires that all State regulations include a statement as to whether the rule or regulation in question contains any standards or requirements which exceed the standards or requirements imposed by Federal law. This Order will be effective on January 1, 1995 and this notice of readoption was signed and filed with OAL prior to the effective date of the Order. However, the following analysis of the Federal and State Coastal Management Acts is provided.

The Coastal Zone Management Act (P.L. 92-583) was passed by Congress and signed into law on October 27, 1972. The Act authorized a Federal grant-in aid program to be administered by the Secretary of Commerce, who in turn delegated this responsibility to the National Oceanic and Atmospheric Administration's (NOAA) Office of Coastal Zone Management (OCZM).

The Federal Coastal Zone Management Act sets no specific regulatory standards for development in the coastal zone, but merely provides broad guidelines and basic requirements for States developing coastal management programs. These guidelines and requirements for Program development and approval are contained in 15 CFR Part 923 as revised and published in the Federal Register. In summary, the requirements for Program approval are that the State develop a coastal management program that:

(1) Identifies the boundaries of the coastal zone subject to the management program;

(2) Defines those land and water uses within the coastal zone which have a direct and significant impact on coastal waters;

(3) Identifies and designates areas of particular concern within the coastal zone;

(4) Identifies the means by which the State proposes to exert control over the land uses and water uses referred to in (2) above, including a list of State constitutional provisions, laws, regulations and judicial decisions;

(5) Contains broad guidelines on priorities of uses in particular areas, including specifically those uses of lowest priority;

(6) Contains a description of the organizational structure proposed to implement the coastal management program, including the responsibilities and interrelationships of local, areawide, State, regional and interstate agencies in the management process;

(7) Contains a procedure for assessing public beaches and a planning process for the protection of and access to, public beaches and other public coastal areas of environmental, recreational, historical, esthetic, ecological, or cultural value;

(8) Contains a planning process for energy facilities likely to be located in or which may significantly affect, the coastal zone including a process for anticipating the management of the impacts resulting from such facilities; and

(9) Contains a planning process for assessing the effects, and studying and evaluating ways to control or lessen the impact of, shoreline erosion and to restore areas adversely affected by such erosion.

In 1978 the State of New Jersey's Coastal Zone Management Program was first approved by NOAA. The Program contains statements of policy which will be followed by the Department in making coastal decisions and which will guide other public and private actions affecting the coast. The State's Coastal Management Program has been designed to enable New Jersey to meet the requirements of the Federal Coastal Zone Amendment Act.

The Department was given responsibility to prepare and administer the State's coastal management program by the Governor. The Department's enabling legislation, the Coastal Area Facility Review Act, Wetlands Act, Waterfront Development Law and tidelands and shore protection statutes provide a strong mandate and basis for direct State agency involvement in key decisions involving the coastal region. The Department of Energy Act and Hackensack Meadowlands Reclamation and Development Act give some coastal responsibilities to other State agencies, and these are also included in the State's Coastal Management Program.

The State's Coastal Management Program meets the guidelines established under the Federal Coastal Zone Management Program, and the State of New Jersey has obtained approval from NOAA to implement its program under the Federal Coastal Zone Management Act. That Act does not contain specific regulatory standards for development in the coastal zone but identifies basic components that must be included in a State's coastal zone management plan. The Department believes that its Rules on Coastal Zone Management, which implement the State's coastal management program, do not exceed the Federal standards of the Federal Coastal Zone Management Act.

Regulatory Flexibility Analysis

The proposed readoption of the rules would apply to regulated development activity within the Coastal Zone. In general, many of the developers subject to the rules would be "small businesses" as defined by the New Jersey Regulatory Flexibility Act, N.J.S.A. 52:14B-16 et seq. These small businesses include real estate developers and builders and contractors in the building industry.

In order to comply with these rules, the small businesses may have to provide documentation demonstrating a project's consistency with the rules. In doing so, it is likely that small businesses will need to retain the services of professional engineers, surveyors and environmental consultants. However, it is anticipated that these costs for small businesses would be minimal, since the rules do provide specific guidance and direction regarding policy compliance and guidance is also available from Department staff. In addition, the Department has limited the application of the rules in cases of single family and duplex developments to a minimum, at N.J.A.C. 7:7E-7.2(f), and intends in the near future to propose amendments to its procedural rules (N.J.A.C. 7:7) in order to further reduce the regulatory burden on those developments. Therefore, the costs associated with permit applications for these types of smaller projects should be reduced.

Full text of the proposed readoption may be found in the New Jersey Administrative Code at N.J.A.C. 7:7E.

You're viewing an archived copy from the New Jersey State Library.

HEALTH

(a)

DIVISION OF EPIDEMIOLOGY, ENVIRONMENTAL, AND OCCUPATIONAL HEALTH SERVICES DIVISION OF AIDS PREVENTION AND CONTROL

Communicable Diseases

Proposed Readoption: N.J.A.C. 8:57
Proposed Repeal and New Rules: N.J.A.C. 8:57-1

Authorized By: Len Fishman, Commissioner, Department of Health, and the Public Health Council, John D. Slade, M.D., Chair.

Authority: N.J.S.A. 26:1A-7, 26:4-2 and 26:5C-5 et seq.

Proposal Number: PRN 1995-87.

A **public hearing** will be held at 2:15 P.M. on Monday, March 13, 1995 at Health and Agriculture Building Auditorium, Trenton, N.J. 08625.

Submit written comments by March 13, 1995 to:

Michael F. Lakat, Special Assistant
Office of the Assistant Commissioner
Division of Epidemiology, Environmental, and Occupational Health Services
CN 369
Trenton, New Jersey 08625-0369
FAX No.: (609) 588-7431

The agency proposal follows:

Summary

Pursuant to Executive Order No. 66(1978), N.J.A.C. 8:57 expires on April 20, 1995. This chapter was filed and became effective on April 20, 1990 as R.1990 d.121. All provisions of this chapter became effective prior to September 1, 1969. Revisions became effective May 20, 1984 as R.1984 d.121. Subchapter 4 became effective May 16, 1975 as R.1975 d.121. Subchapter 5 became effective October 8, 1976 as R.1976 d.315. Further revisions became effective December 13, 1977 as R.1977 d.467. Further amendments became effective July 24, 1978 as R.1978 d.244. Further amendments became effective October 1, 1978 as R.1978 d.293. Further amendments became effective September 1, 1979 as R.1979 d.244. Subchapter 1 was readopted effective November 12, 1980 as R.1980 d.498. Further amendments became effective January 4, 1982 as R.1981 d.502. Subchapter 4 was readopted pursuant to Executive Order No. 66(1978) effective July 18, 1983 as R.1983 d.311. Emergency amendments became effective January 22, 1985 as R.1985 d.40. N.J.A.C. 8:57-4.16 was readopted effective March 25, 1985 as R.1985 d.195. Further amendments became effective June 3, 1985 as R.1985 d.264. Subchapter 1 was readopted pursuant to Executive Order No. 66(1978) as R.1985 d.363, effective June 18, 1985 (amendments effective July 15, 1985). Subchapter 6 became effective June 16, 1986 as R.1986 d.277. Chapter 57 was readopted with amendments as R.1990 d.243. Subchapter 2, Isolation of Persons Ill or Infected with a Communicable Disease, was repealed by R.1990 d.243, effective June 4, 1990, and replaced by Reporting of Acquired Immunodeficiency Syndrome and Infection with Human Immunodeficiency Virus by R.1990 d.244, effective May 21, 1990 and operative June 4, 1990. The text at subchapter 3, Poliomyelitis Vaccine Records, was repealed by R.1990 d.243, effective June 4, 1990 and was replaced with new text by R.1990 d.245, effective May 21, 1990, operative June 4, 1990.

The Department of Health has reviewed the chapter and has determined that it remains necessary, reasonable, and proper for the purposes for which it was originally promulgated, except for the proposed changes indicated below.

Sections of this chapter include rules pertaining to disease entities falling under the jurisdiction of two separate divisions of the State Department of Health, and several different programs within these divisions.

This proposal addresses the repeal and adoption as new rules N.J.A.C. 8:57-1. This action is necessary to incorporate numerous changes in language, format, and organization of the rules. The remainder of the chapter is being readopted without amendments.

N.J.A.C. 8:57-1 Reportable Communicable Diseases

The Department of Health has reviewed this subchapter and has determined that it remains necessary, reasonable, and proper for the purposes for which it was originally promulgated. However, for the sake of clarity, the Department proposes that N.J.A.C. 8:57-1 be repealed and new rules adopted in order to incorporate numerous changes in language, format, and organization of the material. The proposed new rules establish the requirements of the reporting of communicable diseases to the State Department of Health. The Department's objectives for promulgating these rules follow.

N.J.A.C. 8:57-1 specifies who shall report certain communicable diseases, conditions, and laboratory isolates and the procedure and mechanism of such reporting. The responsibilities of laboratories, health care providers, hospitals, institutions, schools, preschools, child care centers, and health officers are delineated. In addition to the rules pertaining to reporting, specific powers to identify and control the spread of communicable diseases are afforded local health departments and the State Department of Health.

The changes in format from the current rules are necessary to eliminate duplication in reporting responsibilities. Current rules require all reporting sources to report all cases of reportable communicable disease. Although this was done to ensure completeness in reporting of any case of a reportable disease, most often only one report was received per case, despite the fact that two or three reporting sources were required to report the case. The reporting sources were creating presumed efficiencies for themselves by reasoning that as long as another reporting source was reporting the case they did not have to report it. Thus, in reality and in practice, the duplicate reporting rule was not meeting its goal or purpose, and significant under-reporting resulted. In the proposed new rules, the infectious disease surveillance system will be streamlined. The reporting source which has the definitive diagnostic data pertaining to a case of a reportable communicable disease will be the only source required to report that case. Additionally, the elimination of duplicate reports will be the first step in the development of an electronic reporting system which will be phased in through amendments to this subchapter within the next two or three years. When fully implemented, the entire surveillance system will be making the most efficient use of all reporting sources, and the public health system at the State and local level will be able to respond to communicable disease problems in a more timely and expeditious manner.

Besides streamlining the reporting process, there are a number of communicable diseases and disease syndromes, as well as focused surveillance reporting models, that have been added to N.J.A.C. 8:57-1 to detect and monitor new and emerging infectious diseases. Since the early 1970's, New Jersey has been challenged by many newly identified pathogens and syndromes, such as toxic shock syndrome, Legionnaires' diseases, Lyme disease and, most recently, cryptosporidiosis and *E. coli* 0157:H7. In addition, several diseases once presumed to be under control, such as tuberculosis and venereal diseases, have increased. Excessive use of antimicrobial drugs has contributed to the emergence of drug-resistant pathogens. Timely recognition of emerging new infections requires an early warning system which can detect these diseases when few cases have occurred, so that the disease can be quickly investigated and control efforts can be developed and implemented before the disease becomes a major public health crisis.

The Centers for Disease Control and Prevention encourage prompt detection of these new threats through the maintenance of effective disease surveillance systems, a thorough understanding of trends in incidence and distribution of known infectious agents, and good communication among clinicians, medical laboratories, and public health systems. The proposed new rules require laboratories to report positive results of specified laboratory tests for known infectious agents. For those diseases for which no diagnostic test is available, health care providers and hospitals are required to report all cases which are diagnosed on clinical grounds. Finally, three focused reporting models, the Pediatric Surveillance System, the Epidemiology Surveillance System, and the Intensive Care Unit (ICU) Surveillance System, will be added. The Pediatric Surveillance System will require specified sources to report weekly or monthly the number of patients diagnosed by disease code. The Epidemiology Surveillance System requires the reporting of the number of antibiotic-resistant organisms for specific antibiotics for special epidemiologic and laboratory studies. The ICU Surveillance System will require the reporting of cases of communicable diseases which have caused serious illness requiring ICU care and which dictate public health action, and cases which may represent emerging infectious

You're viewing an archived copy from the New Jersey State Library.

diseases, for example, presumptive streptococcal toxic shock syndrome, Hanta virus, end organ failure of an unknown or infectious etiology. All three systems will monitor disease trends statewide, identify potential new disease problems and enable the Department to take quick action to control them.

The proposed new rules require all laboratories to submit laboratory human isolates of *E. coli* 0157:H7, *Haemophilus influenzae* isolated from cerebrospinal fluid or blood, *Streptococcus pyogenes* isolated from cerebrospinal fluid or blood, penicillin-resistant *Streptococcus pneumoniae* and vancomycin-resistant *Enterococcus* spp. These isolates are added to the currently required submissions of isolates of *Neisseria meningitidis, Salmonella, Shigella,* and *Legionella pneumophila.* The additions represent examples of emerging infectious agents. The rationale for requiring their submission is identical to the requirement of other isolates in previous rules, that is, they afford public health laboratories the ability to subtype each organism and to identify unique variations in bacteria using newly identified procedures in technological innovations. These innovations are being used as important investigatory tools to identify sources for disease transmission. These innovations are similar to those used for fingerprinting in crime detection. This ability to "fingerprint" bacteria has been instrumental in identifying *Salmonella* and *Shigella* outbreaks, matching human *Legionella* isolates to environmental sources, and for identifying unusual clusters of *N. meningitidis.* As a result of these technological innovations, the Department is requiring laboratories to submit these isolates to enhance the State's ability to detect outbreaks or discover the source of disease transmission. It is anticipated that these innovations will afford public health professionals the same information about the new and emerging infectious agents.

N.J.A.C. 8:57-1.1 sets forth the purpose and scope of this subchapter.

N.J.A.C. 8:57-1.2 consists of the definitions pertinent to the subchapter.

N.J.A.C. 8:57-1.3 sets forth the reporting requirements and procedures for diseases which are immediately reportable.

N.J.A.C. 8:57-1.4 sets forth the reporting requirements for communicable diseases by health care providers.

N.J.A.C. 8:57-1.5 sets forth the reporting requirements for communicable diseases by hospitals.

N.J.A.C. 8:57-1.6 sets forth the reporting requirements for communicable diseases by laboratories.

N.J.A.C. 8:57-1.7 sets forth the reporting requirements for communicable disease by institutions and schools.

N.J.A.C. 8:57-1.8 sets forth the communicable disease reporting requirements for health officers.

N.J.A.C. 8:57-1.9 sets forth the requirements incumbent upon health officers to investigate the presence of disease.

N.J.A.C. 8:57-1.10 describes the procedures for isolation and restriction of individuals who are infected with a communicable disease.

N.J.A.C. 8:57-1.11 specifies required medical examinations and specimen submission.

N.J.A.C. 8:57-1.12 sets forth procedures to address food handlers who are infected with a communicable disease.

N.J.A.C. 8:57-2 Reporting of Acquired Immuodeficiency Syndrome and Infection with Human Immunodeficiency Virus

Acquired Immune Deficiency Syndrome (AIDS) and human immunodeficiency virus (HIV), the virus which causes AIDS, have been directly reportable to the State Department of Health by diagnosing physicians and superintendents of institutions such as hositals, sanitaria, nursing homes, and penal institutions in which a person who is ill with HIV-related illness resides. The original rules requiring the reporting of AIDS became effective October 6, 1986, and unified the reporting and data collection within the Department. The existing rules were first adopted by the Public Health Council (R.1990 d.244), effective May 21, 1990, amended by R.1991 d.251, effective October 21, 1991, to include reporting, with identifiers, of persons infected with HIV, and amended by R.1992 d.215, effective May 18, 1992, to include reporting by clinical laboratories of persons testing positive for HIV and those whose CD4 test result was below that specified by the Centers for Disease Control and Prevention (CDC) as criteria for defining AIDS.

Additionally, the reporting of diagnosed cases of both HIV infection and AIDS to the Department is mandated by N.J.S.A. 26:5C-5 et seq. This statute also mandates the confidentiality of the information. The statute requires the Commissioner, in consultation with the Public Health Council, to promulgate the necessary rules and regulations to carry out the purposes of the Act.

The purpose of this proposed readoption is to continue to make the medically identified presence of the Human Immunodeficiency Virus (HIV) and Acquired Immunodeficiency Syndrome (AIDS) reportable in the same way they currently are reportable. These reporting requirements are proposed so that appropriate actions can continue to be taken to protect the public health, to offer new and promising regimens of medications for prophylactic and therapeutic intervention, and to further plan for the continuing and significant impact this disease will have on the health care system.

Since June 1981, 24,015 cumulative AIDS cases in New Jersey have been reported in a manner consistent with a national surveillance system coordinated by the Center for Disease Control and Prevention (CDC) of the United States Public Health Services. Additionally, 8,749 individuals have been reported with HIV infection who have not yet progressed to AIDS. The information collected through this HIV/AIDS surveillance system has enabled a better measure and perspective on the scope and impact of the disease problem and has allowed identification of targets for prevention activities. Anonymous testing for HIV will continue to be permitted only at sites designated by the State Commissioner of Health.

Rules dealing with communicable disease are primarily promulgated to control transmission, but various communicable diseases are transmitted in widely differing manners, making some transmission control measures inappropriate for some diseases. Since HIV is not airborne or transmitted by casual contact, it is not necessary to restrict nursing home or school admissions or to require the disinfection of ambulances after use by an individual infected with HIV in order to present transmission of the virus.

N.J.A.C. 8:57-7.3 Reportable Occupational and Enviromental Diseases and Poisons

N.J.A.C. 8:57-3.1, Reporting of occupational and environmental diseases and poisonings by hospitals, was implemented in 1985 and readopted with amendments in 1990. This rule pertains to the reporting of the following diagnoses by hospitals: coal workers' pneumoconiosis, asbestosis, silicosis, extrinsic allergic alveolitis, other specified occupational lung diseases, and poisoning from various heavy metals and chemicals. N.J.A.C. 8:57-3.2, Reporting of occupational and environmental diseases and injuries by physicians, was implemented in 1990, R.1990 d.245, and amended in 1993, R.1993 d.569. It pertains to the reporting by physicians of occupational asthma, asbestosis, silicosis, other pneumoconiosis, extrinsic allergic alveolitis, heavy metals toxicity, pesticide toxicity, work-related injuries in children, and fatal occupational injuries. Both rules were promulgated for the prevention of these disorders in others. Based on initial experiences with reporting under these rules, both rules were amended to include those reportable conditions that are most likely to result in meaningful public health follow-up actions.

All of these reportable illnesses are recognized occupational and environmental diseases, which constitute significant threats to the public's health in New Jersey. N.J.A.C. 8:57-3.1 has been critical to the implementation of the occupational health core activities under N.J.A.C. 8:52-3.5, Recognized Public Health Activities and Minimum Standards of Performance for Local Boards of Health. The reporting of these diseases has enabled both the local and State health departments to investigate the causes of these diseases and to prevent further occurrences of such diseases.

New Jersey hospitals have reported 10,348 hospitalizations for occupational and environmental illnesses since 1985. The Department of Health has worked with local health departments to utilize hospital reports for the following: aggregation of the data and preparation of statistical reports; epidemiologic investigations of populations of workers exposed to toxic substances; on-site industrial hygiene investigations to evaluate controls and provide recommendations for improving controls; and referrals to other governmental agencies, such as OSHA, OSHA Consultative Services in the New Jersey State Department of Labor, or the New Jersey Department of Environmental Protection. Local health departments have initiated 729 investigations in response to hospital reports. In one instance, follow-up to a report of pneumoconiosis revealed a major outbreak of pneumoconiosis in an industry not previously associated with

You're viewing an archived copy from the New Jersey State Library.

this disease; this investigation involved the local health department, the State Department of Health, and the Federal Centers for Disease Control and Prevention.

The Department of Health maintains a special register of individuals with silicosis reported under this rule. Currently, more than 900 silicosis patients have been reported. Follow-up with these individuals has identified more than 60 workplaces with other individuals at risk of this disabling, chronic lung disease because of exposures to hazardous levels of silica dust. The Department has provided education and technical consultations to these employers to help them reduce the dust levels. The Department of Health also has worked closely with individuals hospitalized with acute chemical inhalation exposures to ensure that appropriate prevention actions take place at the sources of the exposure.

Because hospital reports only capture a fraction of residents affected by occupational and environmental hazards, and because the hospital reports were demonstrated to be an extremely valuable resource for the prevention of adverse health problems due to exposure to these hazards, the Department promulgated N.J.A.C. 8:57-3.2 to capture physician-diagnosed cases. The public health activities initiated by physician reports have been similar to those in response to hospital reports. Physicians have reported nearly 2,000 patients since the initiation of the rule. These reports have been particularly useful for identifying individuals with work-related asthma, individuals with asbestos-related diseases, and individuals with work-related lead toxicity.

N.J.A.C. 8:57-4 Immunization of Pupils in School

This subchapter concerns the establishment of a set of uniform immunization requirements applicable to children attending all schools, preschools, and child care centers in New Jersey as mandated by N.J.S.A. 26:1A-7. Amendments to this subchapter have been proposed and are pending. The full text of the amendments can be found in the January 17, 1995, New Jersey Register.

The Department's objectives in establishing rules as a condition for children entering school continue to be as follows:

1. To ensure that all children attending school and preschool facilities have been immunized against specific vaccine-preventable diseases;

2. To prevent the transmission of vaccine-preventable diseases by maintaining high immunization rates in school-aged and preschool-aged children; and

3. To collect data on the immunization status of children attending schools and preschool facilities in order to identify areas of the State where immunization rates are not adequate so that intervention measures can be instituted.

Currently available vaccines have greatly reduced the number of cases of vaccine-preventable diseases as compared to the number reported in the pre-vaccine era. However, disease cases continue to occur among children, particularly measles, mumps, rubella, and pertussis. Most of the proposed amendments to N.J.A.C. 8:57-4 are technical clarifications or additions to the provisions of the current rule. The specific vaccines and the number of vaccine doses required have remained the same, except that *Haemophilus influenzae* type b (Hib) conjugate vaccine for child day care enrollees and a second dose of measles vaccine for children entering kindergarten will be required beginning September 1, 1995, in conformance with current immunization recommendations as set forth by the Advisory Committee on Immunization Practices, U.S. Public Health Service, U.S. Department of Health and Human Services.

The parents or guardians of any child born on or after January 1, 1995, where the child enters a child care center after September 1, 1995, shall be required to document that the child has received a minimum of two age-appropriate doses of Hib conjugate vaccine or fewer as appropriate for the child's age. All children aged 12 to 60 months shall have received at least one dose of Hib conjugate vaccine.

The parents or guardians of any child entering kindergarten or first grade for the first time after September 1, 1995, and who was born after January 1, 1990, shall be required to document that the child has received two doses of a measles-containing vaccine. The initial dose must have been administered on or after the child's first birthday and the second dose must have been administered no less than one month after the first dose. Any child entering kindergarten or first grade after September 1, 1995, with no documented doses of a measles-containing vaccine prior to entry, shall receive the second dose of measles-containing vaccine no sooner than one month after the first dose and no later than two months after the first dose.

A physician's medical exemption to immunization of a child shall continue to be granted, provided it is based upon valid medical reasons as cited by the American Academy of Pediatrics (AAP) or the Advisory Committee on Immunization Practices (ACIP) of the United States Public Health Service.

Religious exemptions to immunization for a child shall continue to be granted, provided the parent or guardian explains in writing how the immunization conflicts with the exercise of bona fide religious tenets or practices of the child.

Provisional admission shall continue to be granted, provided there is written documentation that at least one dose each of all the required vaccines has been administered. Parents or guardians of children under age five whose child lacks all of the required vaccines shall have a maximum of 17 months to complete all requirements; for children age five and older, the parents or guardians shall have a maximum of 12 months to complete the requirements. A child enrolling in a New Jersey school shall be granted provisional status only once.

All children with medical or religious exemptions or in provisional enrollment status, may be excluded from the school, preschool, or child care center in the event of a specific vaccine-preventable disease outbreak or threatened outbreak in the school.

Four doses of diphtheria, tetanus, and pertussis (DTP) shall be administered as required in the previous rule; one dose must have been administered on or after the child's fourth birthday. The inclusion of newly licensed vaccines such as diphtheria, tetanus, and acellular pertussis (DTaP) and DTP/Hib are recognized as other acceptable vaccines in meeting the specific DTP and Hib requirements.

Three doses of oral polio vaccine (OPV) or inactivated poliovirus vaccine, if medically appropriate, are required as in the previous rule; one dose must have been administered on or after the child's fourth birthday. The vaccine requirements for DTP and poliovirus vaccine shall still apply to children under one year of age; these children shall be immunized as is medically appropriate for their age in order to ensure greater protection for children and staff in day care settings. Polio vaccine shall not be required of pupils 18 years of age or older.

A physician's diagnosis of past mumps disease will no longer be acceptable for children enrolling in school, preschool, or child care centers after September 1, 1995. A child may still present laboratory evidence of mumps immunity. Mumps and rubella vaccines still must have been administered on or after the child's first birthday as recommended by recognized medical authorities and the vaccine manufacturers.

Social Impact

N.J.A.C. 8:57-1 Reportable Communicable Disease

The implementation of the proposed new rules will have a beneficial social impact. Communicable diseases are a leading cause of preventable morbidity and mortality; communicable disease prevention and control activities continue to be among the most efficient ways of spending limited public health dollars.

The rules have been proposed to optimize the utilization of public health resources. The rules include: adding those diseases caused by antibiotic-resistant organisms, and those caused by emerging infections such as Hanta virus and Cryptosporidium which have the potential of being more effectively controlled, and improving the reporting procedures by eliminating duplication so that the infectious disease surveillance system can be streamlined, reporting sources can be utilized efficiently, and the responsibilities of agencies and individuals can be clarified. It should be noted that the new rules are preparatory to the introduction of a system for the electronic transfer of data and information.

In the past, communicable disease reporting rules have been instrumental in the timely identification of outbreaks, thus resulting in effective disease control interventions. Noteworthy have been disease control investigations involving *Salmonella, Legionella,* and nosocomial outbreaks caused by *Clostridium difficile,* methicillin-resistant *Staphylococcus aureus Klebsiella oxytoca.* A second major impact of the reporting system has been the timely prophylactic treatment of individuals exposed to and at risk for developing illness. Examples include, but are not limited to, partner notification of contacts with sexually transmitted diseases, contact identification and treatment of individuals exposed to *N. meningitidis, H. influenzae* and tuberculosis disease, and prophylactic treatment of individuals exposed to potentially rabid animals. A third consequence of the rules on program activities has been the planning and implementation of long-term projects by identifying those diseases which can only be efficiently controlled with prolonged and extensive commitment of public health resources. Examples of such

You're viewing an archived copy from the New Jersey State Library.

activities include plans to respond to or control sexually transmitted diseases, tuberculosis, Lyme disease, Legionnaires' disease, and hemorrhagic colitis caused by *E. coli* 0157:H7. Thus, adoption will ensure that scarce public health resources at the local and state levels will be more efficiently used and the Infectious Disease Program will be able to respond to disease problems in a more effective and expeditious manner.

N.J.A.C. 8:57-2 Reporting of Acquired Immunodeficiency Syndrome and Infection with Human Immunodeficiency Virus

The potential adverse consequence of this subchapter is the possible loss, or perceived loss, of confidentiality of any of the identifying information submitted to the Department. However, past and current experience of the Department with HIV and AIDS reporting has not revealed any difficulty with the protection of the confidentiality of those individuals identified by the reporting system. Any problems relating to confidentiality have never been the result of reporting to the Department.

The Department currently uses laboratory reports to contact the health care provider who submitted the specimen to the laboratory when no report is on file. The Department is very aware that during these many interactions, confidential information reaching the wrong person could have adverse consequences. Caution is used when contacting providers, especially in private practices, to confirm that the correct staff person is being contacted before identifying information is given.

A perceived loss of confidentiality by those persons identified by the reporting system could have the negative impact of making individuals reluctant to come forward for testing. However, the availability of anonymous testing is continued, so that individuals may choose this option to determine if they have been infected, without giving their name or address at these designated sites. As with any other disease, to obtain treatment, they must be identified and at that point would be reportable to the Department.

The ground work for control of transmission of HIV has been established by the Department of Health. Since June of 1981, 23,477 cumulative cases of AIDS in New Jersey have been reported to the federal Centers for Disease Control and Prevention. This information has enabled a better measure and perspective on the scope and impact of the disease problem, and has also allowed State and national studies on the natural history of the disease.

The Department has initiated a plan to identify, trace, and treat the estimated 50,000 to 70,000 residents infected with the virus which causes AIDS. This comprehensive testing and treatment program makes New Jersey the first state to implement guidelines issued in June, 1989, by the Centers for Disease Control and Prevention which call for the identification of, and medical care for, all adults infected with HIV.

N.J.A.C. 8:57-3 Reportable Occupational and Environmental Diseases and Poisons

The Department of Health has received over 12,000 reports of occupational and environmental disease and injury since the initiation of mandatory reporting by hospitals and physicians. These reports have led public health agencies to initiate hundreds of workplace evaluations which in turn have resulted in the identification and reduction of numerous workplace hazards. The reported data have been aggregated and published widely, so that they can be used by other agencies and employers to undertake public health interventions. The Department of Health has worked closely with other agencies, for example, local health departments, the Department of Enviromental Protection, and the Federal Occupational Safety and Health Administration, to ensure that legal violations of relevant health and environmental standards are corrected.

The social conditions precipitating the proposal of this subchapter are based on the increased concern expressed by the public about environmental hazards, many of which emanate from worksites. There is a need to identify the specific locations of these hazards and to take actions to reduce occupational and environmental exposures to them. Reporting of individuals already sick from these exposures provides information that leads back to the sources of exposure and this initiates appropriate public health actions.

The social conditions that existed at the time of the adoption of these rules have changed, to a limited extent. The Department has observed many more employers taking actions voluntarily to reduce hazardous exposures now than in the 1980's. In response, the Department's intervention activities have focused more recently on the development of educational materials and the provision of these materials and consultative services to a large audience of employers and employees identified from reported cases. Nevertheless, reporting is the essential scientific basis for the development and targetting of public health activities, and reporting is also the basis for evaluating the success of public health interventions. Failure to readopt these rules would jeopardize the health and safety of workers and residents of New Jersey.

These readoptions will primarily impact on five functional groups in society: citizens environmentally exposed to the hazard which causes occupational and environmental diseases; employees exposed to workplace hazards; the employers of individuals who are exposed to workplace hazards; physicians providing medical care to individuals who suffer adverse health effects from occupational and environmental hazards; and hospital administrators who must ensure that hospital reporting is carried out. Pregnant women and children, who are particularly vulnerable to the negative health effects of these hazards, are included in the first two groups. The impact of these rules on exposed individuals will be positive, because reports of sick or injured individuals will result in public health actions to identify and then to prevent or control hazardous conditions posed to others. Employers will benefit from public health follow-up to reports because the identification and control of hazards will help ensure a healthy work force and reduced insurance costs. The social impact on physicians will include heigthened awareness of these hazards and their potential impact on the health status of physicians' patients. Additionally, reporting provides a mechanism and a resource for the physicians who wish to be involved with primary prevention in addition to disease treatment of individual patients.

N.J.A.C. 8:57-4 Immunization of Pupils in School

The readoption of N.J.A.C. 8:57-4 will have continued positive social impact since the rules apply uniformly to all pupils in New Jersey. Vaccine-preventable diseases remain a threat to school-aged and preschool-aged children. There has been a resurgence of measles in New Jersey over the past several years which has primarily affected unimmunized preschool-aged children and older children with only one dose of measles-containing vaccine. *Haemophilus influenzae* type B conjugate vaccine can prevent the transmission of bacterial meningitis in child day care settings thereby reducing or eliminating the severe medical complications for infants and toddlers. Pertussis remains a threat to unimmunized infants and young children. Prevention of such disease outbreaks requires high immunization levels among school-aged and preschool-aged children. A continued high level of protection will prevent these disease outbreaks and their after effects by curtailing the associated high social costs that affect the individual, the family, and the community.

Economic Impact

N.J.A.C. 8:57-1 Reportable Communicable Disease

The expected cost impact of this subchapter will be minimal. In fact, many of the modifications were made to avoid costs resulting from inefficiencies of the previous system. The previous reporting system requiring multiple sources to report every reportable communicable disease has been revised, so that each reportable communicable disease will be reported by the one source that makes the diagnosis or determines the presence of the infectious agent. It is anticipated that costs incurred by hospitals and primary-care providers reporting specified infections will be minimal because the reportable lists have been significantly limited. Additionally, most of the information which the hospitals and primary-care providers are being asked to report is already being collected. Similarly, the costs incurred by laboratories will be marginal, since they are already reporting laboratory results to the local health departments. They will now be asked to report more diseases; however, it is information that they are already collecting.

Similarly, submitting *Salmonella, Shigella, Legionella, N. meningitidis* and antibiotic-resistant isolates to the Department should entail little additional cost to laboratories. Many laboratories already send their isolates and other specimens to the State for analysis and typing. Because of the extensive inter-relationship between the State and clinical laboratories, it is expected that little additional expenditure will be incurred by a laboratory. By sending multiple specimens on a periodic basis, perhaps on a two-week interval, any additional cost can be further reduced. It is anticipated that the benefits in disease control and efficiency will far outweigh any cost incurred.

In order to further reduce costs, the infection disease subcommittee of the Health Officers Association has proposed that the laboratories could send the results to a designated site at a county level, which then would be responsible for sending the information to the various local

You're viewing an archived copy from the New Jersey State Library.

health departments. Due to concern about cost, the Department needs to entertain a flexible approach to finding a solution; however, it is essential that the reporting system not be unduly compromised. The rules define the reporting requirements for the reporting sources, which is the first step in the process of replacing the paper system and developing a system relying on electronic data transfer. Then, and only then, can key laboratory data be sent on a timely basis to the Department for review and analysis, and a quick turn-around to the local health departments for further processing, follow-up and investigation. Outbreaks of infectious disease could be more quickly identified and investigated, and control efforts initiated expeditiously to prevent disease spread. Additionally, when the electronic transfer to the Department becomes available, it will provide a definite cost savings to the laboratories.

N.J.A.C. 8:57-2 Reporting of Acquired Immunodeficiency Syndrome and Infection with Human Immunodeficiency Virus

No changes in the economic impact of the rules are expected. Since the amendments regarding laboratory updating were updated in 1992, and the revised AIDS case definition took effect in January, 1993, there has been a consistent system in place for reporting. While there may be an economic impact in terms of effort to produce reports on the necessary forms, this effort by physicians and institutions is minimal. Likewise, clinical laboratories have already made whatever changes were needed in their procedure to generate the required reports, and any future costs would also be minimal.

If information regarding HIV infection or AIDS were to be misused, it could result in discrimination against an individual. This could result in a serious economic impact against such an individual in areas of housing, employment, and other social interactions. The Department is keenly aware of the need for the strictest confidentiality of this information, and will continue to take all appropriate steps to maintain that confidentiality and to minimize the possibility of inadvertent disclosur of confidential information.

There is a positive economic impact of the reporting requirements, in terms of Federal money allocated under the Ryan White Act for care and treatment of persons with HIV-related illness. New Jersey's ability, over the past two years, to utilize laboratory reports, HIV reporting with identifiers, and AIDS reporting resulted in an increase from $6.4 million to $8 million in Title II funds in the current Federal fiscal year. This money is based on a formula utilizing reported AIDS cases from New Jersey during the two year period ending September 30, 1994. Title I funds to eligible metropolitan areas in the State will also increase, when determined in March, 1995, because of the increased reporting.

N.J.A.C. 8:57-3 Reportable Occupational and Environmental Diseases and Poisons

Most physicians who see patients with any of the diseases or injuries identified in the preceding "Summary" section will see no more than five to 10 patients with these conditions in a single year, and individual hospitals usually have no more than 10 reportable discharges per month. Thus, the economic impact on physicians and hospitals of the readopted rule is minimal. The very minimal costs to physicians and hospitals can be viewed against the economic benefits from reducing occupational and environmental diseases and injuries in the State. Such benefits are significant not only to those affected persons, but also to employers who must compensate injured persons. Costs from lost wages, workers' compensation, medical expenses, and human suffering will be reduced by a decrease in the incidence of occupational and environmental diseases and injuries.

The economic effect on the Department of Health or other agencies also is minimal. The Department already has programs and staff experienced in the management and follow-up of these types of reports.

N.J.A.C. 8:57-4 Immunization of Pupils in School

The readoption will not significantly increase the economic cost to the parents or guardians of children entering school or preschool settings. Most of the required vaccines have been medically recommended by health authorities for over 20 years and most children receive these required doses as part of routine well child care by private pediatricians or public health clinics. Physicians and public clinics have routinely vaccinated all children during infancy with Hib conjugate vaccine since 1990. Most physicians support the 1990 recommendation from all national medical advisory bodies that a second dose of measles-containing vaccine be administered to all children; this additional dose can be conveniently given at the same office visit as school entry boosters for DTP and OPV, thereby minimizing costs. Recent data shows that $1.00 spent on immunizations saves up to $21.00 in direct medical costs. Federal funds have been provided to reduce or eliminate immunization costs to those most in need of economic assistance. Despite increasing vaccine costs for disease prevention, which are borne by the family and public and private health care providers alike, the economic costs associate with outbreaks of vaccine-preventable diseases are at least 10 times greater. These may include hospitalization, lost class time for ill pupils, parental loss of worktime, and disruption of routine school and health delivery activities.

Executive Order No. 27 Statement

The readoption of N.J.A.C. 8:57-1 is not proposed under the authority of, or in order to implement, comply with, or participate in any program established under Federal law, or under a State statute that incorporates or refers to Federal law, Federal standards, or Federal requirements.

The readoption of N.J.A.C. 8:57-2 does not impose standards on health care providers or clinical laboratories that exceed those contained in Federal guidelines for the surveillance of HIV and AIDS as set forth in the December 18, 1992, issue of the Morbidity and Mortality Weekly Report (Volume 41, No. RR-17) published by Centers for Disease Control and Prevention. Additionally, N.J.S.A. 26:5C-5 et seq. requires the Commissioner to promulgate any necessary rules and regulations to implement the Act.

The readoption of N.J.A.C. 8:57-3 is not proposed under the authority of or in order to implement, comply with, or participate in any program established under Federal law or under a State statute that incorporates or refers to Federal law, Federal standards, or Federal requirements.

The readoption to N.J.A.C. 8:57-4 does not impose standards on schools, preschools, child care centers, or health care providers in New Jersey that exceed those contained in Federal guidelines as set forth by the Advisory Committee on Immunization Practices, U.S. Public Health Service, U.S. Department of Health and Human Services.

Regulatory Flexibility Analysis

N.J.A.C. 8:57-1 Reportable Communicable Diseases

The proposed new rules impose some reporting, recordkeeping, and compliance requirements on businesses, some of which are small businesses, as defined by the Regulatory Flexibility Act, N.J.S.A. 52:14B-16 et seq. Small businesses would include small health care provider practices, some clinical laboratories, some preschools, and day care centers.

It is anticipated that the number of isolates a small laboratory would be required to submit to the Department would be so few that the economic impact would be minimal. Furthermore, the requirement to report specified laboratory results to the local health department instead of to the Department would simply change the site to which the report is sent. No need for professional services is anticipated.

The proposed new rules will be applicable to all health care providers, clinical laboratories, preschools, schools, and child care centers without exception based on size or any other characteristic. The statutory provisions being implemented require universal reporting and application in the interests of preventing the spread of diseases and safeguarding public health.

N.J.A.C. 8:57-2 Reporting of Acquired Immunodeficiency Syndrome and Infection with Human Immunodeficiency Virus

The rules proposed for readoption will be applicable to the Department of Health, hospitals, nursing homes, penal institutions, and clinical laboratories. As such, the rules will affect organizations having over 100 employees. However, the rules will also apply to physicians, small clinical laboraties, and other small health care providers, some of which can be considered to be small businesses as defined under the Regulatory Flexibility Act, N.J.S.A. 52:14B-16 et seq.

These rules do require personnel to perform a number of reporting activities, but the Department believes them to be necessary in order to enhance the efforts taking place to halt the further spread of the epidemic. No need for professional services is anticipated. Because reporting must be complete to be useful in the provision of services or for statistical data, no exemption or lesser requirements can be provided for small businesses.

N.J.A.C. 8:57-3 Reportable Occupational and Environmental Diseases and Poisons

N.J.A.C. 8:57-3.1 applies only to hospitals, which are not small businesses. N.J.A.C. 8:57-3.2 applies to those physicians who are small businesses by virtue of being in solo practice or in group practices of

You're viewing an archived copy from the New Jersey State Library.

less than 100 employees. Most physicians are in small businesses, as defined under the Regulatory Flexibility Act, N.J.S.A. 52:14B-16 et seq.

The reporting requirement for N.J.A.C. 8:57-3.2 is simple and can be done by filling in a one-page form, supplied by the Department. No other recordkeeping or compliance requirements are involved. There are no initial capital costs. The only cost to physicians is a stamp for the envelope and minimal staff time to fill out the form. It is estimated the individual physicians will be required to complete approximately 10 mailings per year. No need for professional services is anticipated. In order to promote the public health, as described in the preceding "Social Impact" section, no exceptions to these rules will be permitted.

N.J.A.C. 8:57-4 Immunization of Pupils in School

The proposed readoption of N.J.A.C. 8:57-4 will have an impact on small business, since all children entering or attending schools, preschools, or child care centers in New Jersey are subject to compliance with the same immunization rules, regardless of their source of medical care, or what program they attend. Small businesses, such as physicians' offices, child day care centers, preschools and schools are affected by these rules, in that they are required to maintain records regarding the immunization status of the children in their care, and will incur costs in doing so. No differentiation can be made because prevention of these specific vaccine-preventable diseases is in the public health interest.

Full text of the proposed readoption may be found in the New Jersey Administrative Code at N.J.A.C. 8:57.

Full text of the proposed repeal may be found in the New Jersey Administrative Code at N.J.A.C. 8:57-1.

Full text of the proposed new rules follows:

SUBCHAPTER 1. REPORTABLE COMMUNICABLE DISEASES

8:57-1.1 Purpose and scope

(a) The purpose of this subchapter is to expedite the reporting of certain diseases or outbreaks of disease so that appropriate action can be taken to protect the public health. The latest edition of the American Public Health Association's publication, "Control of Communicable Disease in Man," should be used as a reference, providing guidelines for the characteristics and control of communicable diseases, unless other guidelines are issued by the Department.

(b) For purposes of research, surveillance, and/or in response to technological developments in disease detection or control, the Commissioner, or his or her designee, is empowered to amend the diseases specified in this subchapter for such periods of time as may be necessary to control disease, in accordance with the Administrative Procedure Act, N.J.S.A. 52:14B-1 et seq.

8:57-1.2 Definitions

The following words and terms, as used in this subchapter, shall have the following meanings, unless the context clearly indicates otherwise.

"Child care center" means any home or facility required to be licensed by the Department of Human Services which is maintained for the care, development, or supervision of six or more children under six years of age who attend for less than 24 hours a day.

"Commissioner" means the New Jersey State Commissioner of Health.

"Communicable disease" means an illness due to a specific infectious agent or its toxic products which arises through transmission of that agent or its products from an infected person, animal, or inanimate reservoir to a susceptible host, either directly of indirectly through an intermediate plant or animal host, vector, or the inanimate environment.

"Department" means the New Jersey State Department of Health.

"Health officer" means a holder of a license as health officer issued by the State Department of Health, pursuant to N.J.S.A. 26:1A-38 et seq., who is employed by a local board of health to function during all working hours of the regularly scheduled work week of the governmental unit to which the local health agency is attached and not regularly employed during the working hours of that scheduled work week in other activities for which he or she receives remuneration.

"Health care provider" means a person who is directly involved in the provision of health care services, such as the clinical diagnosis and prescribing of medications, and when required by State law, the individual has received professional training in the provision of such services and is licensed or certified for such provision. This includes physicians, physician assistants, and nurse practitioners.

"Hospital" means an institution, whether operated for profit or not, which maintains and operates facilities for the diagnosis, treatment, or care of two or more non-related individuals suffering from illness, injury or deformity and where emergency, out-patient, surgical, obstetrical, convalescent, or other medical and nursing care is rendered for periods exceeding 24 hours.

"Local health department" means the board of health of a region or municipality or the boards, bodies, or officers in such region or municipality lawfully exercising any of the powers of a local board of health under the laws governing such region or municipality.

"May" means that the action referred to is discretionary.

"N.J.A.C." means the New Jersey Administrative Code.

"N.J.S.A." means the New Jersey Statutes Annotated.

"Nosocomial infection" means an infection occurring in a patient in a hospital or other health care facility and in whom it was not present or incubating at the time of admission, or the residual of an infection acquired during a previous admission. This term includes infections acquired in the hospital but appearing after discharge, and also such infections among the staff of the facility.

"Outbreak" means any unusual occurrence of disease or any disease above background or endemic levels. Endemic level refers to the usual prevalence of a given disease within a geographic area.

1. "Suspected outbreak" means an outbreak which appears to meet the definition of an outbreak, but has not yet been confirmed.

"Outpatient-based setting" means a setting in which preventive, diagnostic, and treatment services are provided to persons who come to the facility to receive services and depart from that facility the same day. This term includes, but is not limited to, private physicians offices, health maintenance organizations, clinics, public health centers, diagnostic centers, and treatment centers.

"Pediatric surveillance system" means a group of primary care pediatricians and family practice physicians who report weekly or monthly to the Department the number of patient diagnoses made in their practice by disease code.

"School" means any building, structure, or part thereof used for purposes of the education of children between grades kindergarten through 12 whether publicly or privately owned.

"Shall" means that the action referred to is mandatory.

"Venereal disease" means syphilis, gonorrhea, chancroid, lymphogranuloma venereum, and granuloma inguinale.

8:57-1.3 Diseases which are immediately reportable

(a) The following diseases shall be reported immediately to the local health department:

1. Botulism *(Clostridium botulinum)*;
2. Diphtheria *(Corynebacterium diphtheriae)*;
3. *Haemophilus influenzae,* invasive disease;
4. Hepatitis A, institutional settings;
5. Measles;
6. Meningococcal disease *(Neisseria meningitidis)*;
7. Pertussis (whooping cough, *Bordetella pertussis*);
8. Plague *(Yersinia pestis)*;
9. Poliomyelitis;
10. Rabies (human illness);
11. Rubella;
12. Viral hemorrhagic fevers, including, but not limited to, Ebola, Lassa, and Marburg viruses;
13. Foodborne intoxications, including, but not limited to, ciguatera, paralytic shellfish poisoning, scombroid, or mushroom poisoning; and
14. Any foodborne, waterborne, nosocomial, outbreak or suspected outbreak or any outbreak or suspected outbreak of unknown origin.

(b) A health care provider, a chief executive officer or other person having control or supervision over a hospital, a laboratory

You're viewing an archived copy from the New Jersey State Library.

director, an institutional superintendent, a child care center or preschool director, or a principal having knowledge of any person who is ill or infected with any disease listed in (a) above, or any communicable disease, whether confirmed or presumed, shall immediately report the facts by telephone to the health officer of the jurisdiction wherein the diagnosis is made. Such telephone report shall be followed up by a written or electronic report within 24 hours of the initial report. If the health officer is unavailable, the report shall be made to the Department by telephone (609-588-7500, during business hours; 609-392-2020, after business hours, on weekends and holidays) or by fax (609-588-7431).

8:57-1.4 Reporting of diseases in an outpatient-based setting

(a) In addition to the reporting requirements of N.J.A.C. 8:57-1.3, any single case, either confirmed or presumed, of the following diseases diagnosed in an outpatient-based setting shall be reported by a health care provider to the local health department:

1. An enteric disease, either in a child who attends a day care center or in a foodhandler;
2. Hemorrhagic colitis;
3. Kawasaki disease (mucocutaneous lymph node syndrome);
4. Lyme disease;
5. Measles;
6. Mumps;
7. Pertussis;
8. Rabies, animal bites treated for rabies;
9. Rubella;
10. Syphilis, primary; and
11. Tuberculosis.

(b) A health care provider attending any person who is ill or infected with any disease listed in (a) above shall, within 24 hours of diagnosis, make a report as set forth in (c) below to the health officer of the jurisdiction wherein the diagnosis is made. If the health officer is unavailable, the report shall be made to the Department by telephone (609-588-7500, during business hours; 609-392-2020, after business hours, on weekends and holidays) or by fax (609-588-7431). In cases of venereal diseases and tuberculosis, the reports shall be submitted directly to the Department.

(c) The report shall include the name, municipality and telephone number of the reporting health care provider; the name of the disease; the name, age, date of birth, gender, home address and telephone number of the person ill or infected with such disease; the date of onset of illness; and such other information as may be requested by the Department.

(d) A health care provider may delegate this reporting activity to a staff member, but this delegation does not relieve the health care provider of the ultimate reporting responsibility.

(e) A health care provider who fails to report pursuant to the requirements of this section may receive written notification of this failure and a warning. A health care provider who, despite warning, continues to fail to comply with the reporting requirements, shall be subject to a fine pursuant to the provisions of N.J.S.A. 26:4-129. A health care provider whose failure to report is determined by the Department to have significantly hindered public health control measures, shall be subject to other actions, including, but not limited to, notification of the violation to the State Board of Medical Examiners or State Board of Nursing, as the case may be, and/or appropriate hospital medical directors or administrators.

(f) A health care provider who participates in the Department's Pediatric Surveillance System shall submit data as outlined by the Pediatric Surveillance System. Reports made, maintained, or kept on file pursuant to this section shall not be disclosed with any identifying information.

8:57-1.5 Reporting of diseases from hospitals

(a) In addition to the reporting requirements of N.J.A.C. 8:57-1.3, any single case, either confirmed or presumptive, of the following diseases, diagnosed in or admitted to, a hospital shall be reported by the chief executive officer or other person having control or supervision over the hospital to the health officer having jurisdiction over the locality in which the hospital is located:

1. Anthrax;
2. Arboviral diseases;
3. Creutzfeld-Jakob disease;
4. Guillain-Barre syndrome;
5. Hemolytic uremic syndrome;
6. Kawasaki disease (mucocutaneous lymph node syndrome);
7. Legionnaires' disease, nosocomial;
8. Rabies, animal bites treated for rabies;
9. Rheumatic fever, acute;
10. Rubella, congenital;
11. Tetanus;
12. Toxic shock syndrome, streptococcal;
13. Trichinosis;
14. Tuberculosis; and
15. Yellow fever.

(b) The chief executive officer or any other person having control or supervision over a hospital with a person who is ill or infected with any of the diseases listed in (a) above shall, within 24 hours of diagnosis, make a written report as set forth in (c), below, to the health officer of the jurisdiction in which the hospital is located. If the health officer is unavailable, the report shall be made to the Department by telephone (609-588-7500, during business hours; 609-392-2020, after business hours, on weekends and holidays) or by fax (609-588-7431). In cases of tuberculosis, the report shall be submitted directly to the Department.

(c) The report shall include the name, municipality, and telephone number of the hospital; the name of the disease; the name, age, date of birth, gender, home address and telephone number of the person who is ill or infected with such disease; the date of onset of illness; and such other information as may be requested by the Department.

(d) A chief executive officer or other person having control or supervision over the hospital may delegate these reporting activities to a staff member, but this delegation does not relieve a chief executive officer or other person having control over the hospital of the ultimate reporting responsibility.

(e) A chief executive officer or other person having control or supervision over a hospital who fails to report pursuant to the provisions of this section may receive written notification of this failure and a warning. Responsible parties who, despite warning, continue to fail to comply with these reporting requirements, shall be subject to a fine, pursuant to the provisions of N.J.S.A. 26:4-129. A chief executive officer or other person having control or supervision over a hospital whose failure to report is determined by the Department to have significantly hindered public health control measures shall be subject to other actions, including, but not limited to, notification of the violation to the Department's Division of Health Facilities Evaluation and any other licensing review organizations.

(f) Notwithstanding the provisions of this rule, a chief executive officer or any other person having control or supervision over a hospital in which an outbreak or suspected outbreak occurs shall make a report as set forth in (c) above to the health officer of the jurisdiction in which the hospital is located. If the health officer is unavailable, the report shall be made to the Department by telephone (609-588-7500, during business hours; 609-392-2020, after business hours, on weekends and holidays) or by fax (609-588-7431).

(g) A chief executive officer or any other person having control or supervision over a hospital shall, within 31 calendar days of the end of each month, submit data regarding specific microorganisms occuring during that month within the hospital to the Department, utilizing the Epidemiology Surveillance Form. Reports made, maintained, or kept on file pursuant to this section shall not be public records.

(h) Effective July 1, 1995, pediatric intensive care units shall, on a weekly basis, report cases of organ failure of presumed infectious or undetermined etiology to the Department. The report may be made to the Department by telephone (609-588-7500, during business hours; 609-392-2020, after business hours, on weekends and

You're viewing an archived copy from the New Jersey State Library.

holidays) or by fax (609-588-7431). Reports made, maintained, or kept on file pursuant to this subsection shall not be disclosed with any identifying information.

(i) Effective July 1, 1996, medical intensive care units shall, on a weekly basis, report cases of organ failure of presumed infectious or undetermined etiology to the Department. The reports may be made to the Department by telephone (609-588-7500, during business hours; 609-392-2020, after business hours, on weekends and holidays) or by fax (609-588-7431). Reports made, maintained, or kept on file pursuant to this subsection shall not be disclosed with any identifying information.

8:57-1.6 Reporting of diseases from laboratories

(a) In addition to the reporting requirements of N.J.A.C. 8:57-1.3, any positive culture, test, or assay result specific for one of the following organisms shall be reported by a laboratory director to the local health department:

1. Acid fast bacilli;
2. Antibiotic-resistent organisms (hospital-based laboratories only);
3. Arboviruses;
4. *Babesia* spp.;
5. *Bacillus anthracis;*
6. *Bordetella pertussis;*
7. *Borrelia burgdorferi;*
8. *Brucella* spp.;
9. *Campylobacter jejuni;*
10. *Chlamydia pneumoniae;*
11. *Chlamydia psittaci;*
12. *Chlamydia trachomatis;*
13. *Clostridium botulinum;*
14. *Clostridium tetani;*
15. *Corynebacterium diphtheriae;*
16. *Cryptosporidium* spp.;
17. Ebola virus;
18. *Entamoeba histolytica;*
19. *Ehrlichia canis;*
20. *Escherichia coli* 0157:H7;
21. Foodborne intoxications, including, but not limited to, ciguatera, paralytic shellfish poisoning, scombroid, or mushroom poisoning;
22. *Francisella tularensis;*
23. *Giardia lamblia;*
24. Hanta virus;
25. *Haemophilus ducreyi;*
26. *Haemophilus influenzae* isolated from cerebrospinal fluid, blood, needle aspirate, or sputum;
27. *Helicobacter pylori;*
28. Hepatitis A;
29. Hepatitis B;
30. Hepatitis C;
31. Human papillomavirus;
32. Lassa virus;
33. *Legionella pneumophila;*
34. *Leptospira interrogans;*
35. *Listeria monocytogenes;*
36. Marburg virus;
37. Mumps virus;
38. *Mycobacterium,* atypical;
39. *Mycobacterium leprae;*
40. *Mycobacterium tuberculosis;*
41. *Neisseria gonorrhoeae;*
42. *Neisseria meningitidis* isolated from cerebrospinal fluid, blood, needle aspirate, or any other normally sterile site;
43. *Plasmodium* spp.;
44. Polio virus;
45. Rabies virus;
46. *Rickettsia* spp. including *Coxiella burnetii* and *Rickettsia rickettsii;*
47. Rubella virus;
48. Rubeola virus;
49. *Salmonella* spp.;
50. *Shigella* spp.;
51. *Streptococcus pyogenes,* Group A, isolated from cerebrospinal fluid or blood;
52. *Streptococcus agalactiae,* Group B, perinatal isolated from cerebrospinal fluid or blood;
53. *Treponema pallidum* (syphilis);
54. *Trichinella spiralis;*
55. *Vibrio* spp.;
56. *Yersinia enterocolitica;*
57. *Yersinia pestis;* and
58. Antibiotic sensitivity for *M. tuberculosis.*

(b) A laboratory director shall report positive cultures or positive laboratory test results for the microorganisms listed in (a) above within five business days after obtaining a positive result. The reports shall be submitted in writing to the health officer having jurisdiction over the locality in which the health care provider requesting the laboratory examination is located.

1. Specific testing procedures for the organisms in (a) above shall be made available periodically from the Department.
2. In cases of venereal diseases, tuberculosis, and *Chlamydia trachomatis,* the reports shall be submitted directly to the Department, no later than 72 hours after the close of business on the day on which the positive cultures or positive test results were obtained.

(c) The report shall contain, at a minimum, the reporting laboratory's name, address, and telephone number; the name, age, sex, and address of the person tested; the test performed; the date of testing; the test results; and the health care provider's name and address.

(d) A laboratory director may delegate reporting and specimen submission activities, as delineated in (g) below, to a staff member, but this delegation does not relieve a laboratory director of the ultimate reporting responsibility.

(e) A laboratory director who fails to fulfill the reporting requirements and the specimen submission requirements of this section may receive written notification of this failure and a warning to comply. A laboratory director who, despite warning, continues to fail to comply with these reporting requirements, shall be subject to a fine pursuant to the provisions of N.J.S.A. 26:4-129. A laboratory director whose failure to report is determined by the Department to have significantly hindered public health control measures shall be subject to other actions, including, but not limited to, reporting such failure to the Department's Clinical Laboratory Improvement Services.

(f) Notwithstanding the provisions of this section, laboratory results indicative or suggestive of the existence of an outbreak of disease, or of any single case of a disease listed in N.J.A.C. 8:57-1.3(a), shall be immediately reported by telephone to the health officer in whose jurisdiction the case is located. A follow-up written report shall be submitted within five business days after the initial report. If the health officer is unavailable, the report shall be made to the Department by telephone (609-588-7500, during business hours; 609-392-2020, after business hours, on weekends and holidays) or by fax (609-588-7431).

(g) A laboratory director shall submit, to the State Department of Health, Division of Public Health and Environmental Laboratories, John Fitch Plaza, Market and Warren Streets, Trenton, NJ 08625-0361, for further testing, all microbiologic cultures obtained from human or food specimens of the following organisms:

1. *Escherichia coli* 0157:H7;
2. *Haemophilus influenzae* isolated from cerebrospinal fluid or blood;
3. *Legionella pneumophila;*
4. *Neisseria meningitidis;*
5. *Salmonella* spp.;
6. *Shigella* spp.;
7. *Streptococcus pyogenes* isolated from cerebrospinal fluid or blood;
8. Penicillin-resistant *Streptococcus pneumoniae* isolated from cerebrospinal fluid of blood; and
9. Vancomycin-resistant *Enterococcus* spp. isolated from cerebrospinal fluid or blood.

You're viewing an archived copy from the New Jersey State Library.

8:57-1.7 Reporting of disease outbreaks occurring in institutions and schools

(a) A chief executive officer, superintendent, or other person having control or supervision over any institution such as a sanitarium, nursing home, shelter for the homeless, penal institution, child care center, preschool, school, or college in which an outbreak or suspected outbreak occurs shall immediately report this event by telephone to the health officer having jurisdiction over the locality in which the institution or school is located.

1. If the outbreak occurs in a State institution, the outbreak shall be immediately reported to the Department by telephone (609-588-7500, during business hours; 609-392-2020, after business hours, on weekends and holidays) or by fax (609-588-7431).

(b) The reports shall include the name, municipality and telephone number of the institution or school; the name of the disease or suspected disease; the number ill; dates of onset; symptomology; pertinent medical history and available diagnostic confirmation; and such other information as may be requested by the health officer or the Department.

(c) A chief executive officer, superintendent, or other person having control or supervision over the institution may delegate these reporting activities to a staff member, but this delegation does not relieve the superintendent of the ultimate responsibility.

(d) A chief executive officer, superintendent, or other person having control or supervision over an institution in which an outbreak or suspected outbreak occurs who fails to report pursuant to the requirements of this section may receive written notification of this failure and a warning to comply. A responsible party who, despite warning, continues to fail to comply with these reporting requirements, shall be subject to a fine pursuant to the provisions of N.J.S.A. 26:4-129. A responsible party whose failure to report is determined by the Department to have significantly hindered public health control measures shall be subject to other actions, including, but not limited to, notification to the Department's Division of Health Facilities Evaluation, the Department of Human Services, or the Department of Education, as the case may be, and other licensing review organizations as appropriate.

8:57-1.8 Reporting of diseases by health officers

(a) A health officer who is notified of any disease outbreak, or of any single case of a disease listed in N.J.A.C. 8:57-1.3(a), shall immediately notify the Department by telephone (609-588-7500, during business hours; 609-392-2020, after business hours, on weekends and holidays) or by fax (609-588-7431).

(b) A health officer who is notified of the existence of diseases pursuant to the provisions of N.J.A.C. 8:57-1.4, 1.5, 1.6, and 1.7 shall, within 24 hours of receipt of the report, forward a copy thereof to the Department. If the initial report is incomplete, a health officer shall seek complete information and shall provide all available information to the Department within five working days of receiving the initial report.

(c) A health officer who is notified of any outbreak of disease, or of any single case of a disease listed in N.J.A.C. 8:57-1.3(a), which is not within that health officer's jurisdiction shall immediately notify the health officer where the disease was believed to have been contracted and the health officer of the local health agency wherein the home address of the ill or affected person is located, as the case may be. If either of the said health agencies are not located in New Jersey, the health officer shall forward this information to the Department by telephone (609-588-7500, during business hours; 609-392-2020, after business hours, on weekends, and holidays) or by fax (609-588-7431).

(d) A health officer may delegate reporting activities to a staff member, but this delegation shall not relieve the health officer of the ultimate reporting responsibility.

(e) A health officer who fails to report pursuant to the provisions of this section shall receive written notification of this failure and a warning. A health officer who, despite warning, fails to comply with these reporting requirements, shall be subject to a fine pursuant to the provisions of N.J.S.A. 26:4-129. A health officer whose failure to report is determined by the Department to have significantly hindered public health control measures shall be subject to other actions, including notification to the Department's Public Health Licensing and Examination Board and the Public Health Council.

8:57-1.9 Health officer investigations

(a) A health officer shall, upon receiving a report of an outbreak or suspected outbreak of any communicable disease, or of a case or suspected case of any infectious disease, investigate the facts contained in the report. A health officer shall follow such direction regarding the investigation as may be given by the Department.

(b) The health officer performing investigation set forth in (a) above shall, at a minimum:

1. Determine whether a single case or an outbreak of a reportable disease exists;

2. Ascertain the source and spread of the infection; and

3. Determine and implement appropriate control measures.

(c) The health officer shall immediately relay all available information pertaining to the investigation to the Department by telephone (609-588-7500, during business hours; 609-392-2020, after business hours, on weekends, and holidays) or by fax (609-588-7431).

(d) The Department may require more than one health officer to participate in the investigation. The health officers may include those having jurisdiction over:

1. The location of suspected transmission of disease;

2. Areas of residence or occupation of person(s) believed to be ill or infected;

3. Sites of institutions where such persons may be located or receive care; and

4. Other jurisdictions which are determined to be appropriate and necessary by the Department.

8:57-1.10 Isolation and restriction for communicable disease

(a) A health officer or the Department, upon receiving a report of a communicable disease, shall, by written order, establish such isolation or other restrictive measures required by statute or rule to prevent or control disease. If, in the judgment of the health officer or the Department, it is necessary to provide adequate isolation, a health officer or the Department shall promptly remove, or cause to be removed, a person who is ill with a communicable disease to a hospital. Such order shall remain in force until terminated by the health officer or the Department.

(b) A health officer or the Department may restrict access of the individuals permitted to come in contact with or visit a person who is hospitalized or isolated under authority of this section.

(c) The Department or health officer, if authorized by local ordinance or by the Department, may, by written order, restrict any person who has been exposed to a communicable disease, under conditions he or she may specify; providing such period of restriction shall not exceed the period of incubation of the disease.

(d) A person who is responsible for the care, custody, or control of a person who is ill or infected with a communicable disease shall take all measures necessary to prevent transmission of the disease to other persons.

8:57-1.11 Medical examination and specimen submission

(a) The Department or a health officer may order a person who is suspected of being ill or infected with a reportable or communicable disease, or who has been exposed to a reportable or communicable disease, to submit to physical examination, X-ray studies, laboratory studies, and such other diagnostic procedures as deemed necessary to determine whether or not such person is infectious to others or is a carrier of disease.

(b) Any person who is ordered to submit to examination and/or to submit specimens under (a) above shall comply with the order.

(c) Specimens obtained under the authority of this chapter and under provisions of this rule shall be submitted to a laboratory which is approved by the Department for examination of such specimens.

8:57-1.12 Foodhandlers ill or infected with communicable diseases

(a) A person who is ill or infected with a communicable disease which may be transmitted through food may, based on the type of organism, job function of the person, and the virulence of the disease, be prohibited by a health officer or the Department from

You're viewing an archived copy from the New Jersey State Library.

working in any occupation that manufactures, processes, stores, prepares, or serves food for public consumption. A person who resides in, boards at, lodges in, or visits a household where that person may come in contact with any person who is ill or infected with a communicable disease which may be transmitted through food may be prohibited by the health officer or the Department from working in any occupation that manufactures, processes, stores, prepares, or serves food for public consumption.

(b) A person who is employed in any establishment where food is manufactured, processed, stored, prepared, or served for public consumption may be required by a health officer or the Department, if a communicable disease is suspected, to submit to a physical examination and/or submit specimens of blood, bodily discharges, or other specimens for the purpose of ascertaining whether or not they are ill or infected with a communicable disease.

(c) A health officer or the Department may prohibit the sale or distribution of food which:

1. Has been prepared by a person who is ill or infected with a communicable disease which may be transmitted through food; or
2. Is considered to be a possible vehicle for spread of disease.

Full text of the rules proposed for readoption may be found in the New Jersey Administrative Code at N.J.A.C. 8:57.

HUMAN SERVICES

(a)

MENTAL HEALTH AND HOSPITALS

Liaison Standards

Proposed New Rules: N.J.A.C. 10:37G

Authorized By: William Waldman, Commissioner, Department of Human Services.

Authority: N.J.S.A. 30:9A-10.

Proposal Number: PRN 1995-76.

Submit comments by March 8, 1995 to:
Raymond M. Deeney, Esq.
Administrative Practice Officer
Division of Mental Health and Hospitals
CN 727
Trenton, New Jersey 08625-0727

The agency proposal follows:

Summary

These proposed new rules govern the provision of liaison services by the staff of provider agencies funded by the Division of Mental Health and Hospitals. Liaison services are designed to facilitate the transition of clients 18 years of age or older from treatment received at State or county psychiatric hospitals to treatment received at community mental health programs. Liaisons participate in the discharge planning process while the patient is hospitalized and their role includes advocating for the client to get the earliest possible appointment in the community, exchanging information between the hospital and relevant community providers and following up to ensure that the linkage has been successful. Currently liaison services are provided throughout the State by agencies funded by the Division and these new rules will provide uniform standards for those services but will not significantly alter the character of the services.

For fiscal year 1994, the Division is providing over $3,376,000 in funding to 45 providers of liaison services, which serve over 14,000 individuals throughout New Jersey. The Division concluded a process last year to develop uniform standards for these services, with significant input from service providers, consumers, family members and advocates for individuals with mental illness.

N.J.A.C. 10:37G-1.1 explains the scope and purpose of these proposed new rules. N.J.A.C. 10:37G-1.2 provides definitions for some words and terms used in this chapter. N.J.A.C. 10:37G-2.1 provides requirements for the development and implementation of written policies and procedures. N.J.A.C. 10:37G-2.2 provides requirements for the development of written affiliation agreements. N.J.A.C. 10:37G-2.3 provides for the establishment of a process for the coordination of client information between provider agencies and hospitals. N.J.A.C. 10:37G-2.4 provides requirements for the participation of liaisons in their clients' discharge oriented service planning. N.J.A.C. 10:37G-2.5 requires liaisons to ensure that clients are linked to needed community mental health services. N.J.A.C. 10:37G-2.6 provides documentation requirements for the individual clinical records of enrolled clients. N.J.A.C. 10:37G-2.7 provides the minimum educational and experience requirements for liaisons.

Social Impact

These services are designed to ensure the effective coordination of services for indigent individuals with serious and persistent mental illness as they move between inpatient and outpatient settings within the publicly funded mental health system. Implementation of these services and standards is expected to promote greater independence and improved quality of life, as well as reduced hospitalizations, among the clients receiving the services. The opportunity for input offered to clients, advocates and providers has resulted in rules which the Department believes are more clear and reflective of current thinking and recent experience.

Additionally, these standards assist provider agencies in attaining their goal of providing high quality and well focused services. The Division benefits from the promulgation of these standards because they provide an appropriate measure to use in determining whether service delivery meets basic minimum requirements.

Economic Impact

The funding of, and the establishment of standards for, liaison services have a positive economic impact on clients with limited incomes because they are generally made available to them at no cost. For fiscal year 1994 the Division is providing over $3,376,000 in funding to 45 providers of liaison services, which service over 14,000 individuals throughout New Jersey.

The Department believes that provider agencies can comply with these rules without expenditures in addition to the funding received from the Division and other sources to provide these services. The promulgation of these standards is not intended or expected to impact the amount of Division funding available to agencies to provide these services in the future. The Department also believes that taxpayers throughout the State ultimately benefit from the effective delivery of these services, because the services help to reduce the need for expensive psychiatric rehospitalization. Basic liaison services throughout the State will not change as a result of this proposal; these new rules, however, will provide uniform standards for these services which have been developed with significant input from interested parties and adopted pursuant to the Administrative Procedures Act, N.J.S.A. 52:14B-1 et seq.

Executive Order No. 27 Statement

An Executive Order No. 27 analysis is not required because there are no Federal standards which apply to liaison services.

Regulatory Flexibility Analysis

Some providers of Division funded liaison services may be small businesses, as that term is defined in the Regulatory Flexibility Act, N.J.S.A. 52:14B-16 et seq.

The proposed new rules require provider agencies to develop and implement written policies and procedures to ensure compliance with the rules in this chapter (N.J.A.C. 10:37G-2.1), develop written affiliation agreements with the State and county hospitals where they provide service (N.J.A.C. 10:37G-2.2), establish a process for coordination of client information between provider agencies and hospitals (N.J.A.C. 10:37G-2.3), participate in their client's discharge-oriented service planning (N.J.A.C. 10:37G-2.4), ensure that clients are provided with needed appointments for services in the community after hospital discharge (N.J.A.C. 10:37G-2.5), maintain individual clinical records for clients (N.J.A.C. 10:37G-2.6) and only employ liaisons with specified education and experience (N.J.A.C. 10:37G-2.7).

The reporting, recordkeeping and other compliance requirements imposed upon such provider agencies must be uniformly applied, regardless of the size of the provider agency, to ensure that individuals with mental illness receiving these services throughout the State do so in accordance with basic minimum standards of quality. These standards are important because many consumers of these community services would be at risk of more restrictive and expensive hospitalization, unless these services are competently and effectively provided. Additionally, these agencies are individually funded by the Division to be able to meet these requirements, and it is not anticipated that compliance will require the employment of professional services by providers.

You're viewing an archived copy from the New Jersey State Library.

Full text of the proposed new rules follows:

CHAPTER 37G
LIAISON SERVICES

SUBCHAPTER 1. GENERAL PROVISIONS

10:37G-1.1 Scope and purpose

(a) The rules in this chapter shall apply to all Division-funded liaison services provided to individuals 18 years of age or older who have been hospitalized at State or county hospitals.

(b) The purpose of liaison services is to facilitate the transition of clients to the community from State or county psychiatric hospitals. Liaisons participate in the discharge planning process while the patient is hospitalized and then link the client with community programs upon discharge from the hospital. The role of the liaison includes advocating for the patient to get the earliest possible appointment in the community, exchanging information between the relevant community providers and the hospital and following up to ensure that the linkage has been successful.

10:37G-1.2 Definitions

The following words and terms, as used in this chapter, shall have the following meanings, unless the context clearly indicates otherwise.

"Division" means the Division of Mental Health and Hospitals in the Department of Human Services.

"Liaison services" means services designed to facilitate the transition of clients 18 years of age or older from treatment received at State or county operated psychiatric hospitals to treatment received at community mental health programs.

"Provider agency (PA)" means a public or private entity which has a contract with the Division to provide liaison services.

SUBCHAPTER 2. PROGRAM OPERATION

10:37G-2.1 Written policies and procedures

(a) The PA shall develop and implement written policies and procedures to ensure that the services provided comply with the rules in this chapter.

(b) These policies and procedures shall be reviewed annually and revised whenever necessary.

10:37G-2.2 Affiliation agreements

(a) The PA shall develop written affiliation agreements with the State and county hospitals where they provide services.

(b) These affiliation agreements shall include, but need not be limited to, descriptions of the following:

1. The roles, responsibilities and service activities of the PA and State and county hospitals;

2. The procedures for assessing liaison services including notification practices and the time frames for agency response, including, but not limited to, time frames for face to face contact with newly admitted clients who are assigned liaison services;

3. The priorities and criteria for liaison service assignment;

4. The quality assurance systems which shall be implemented for monitoring and evaluating the liaison services;

5. The procedures which allow liaison and hospital staff to attend training at both locations; and

6. The requirements for liaison attendance at treatment team meetings.

10:37G-2.3 Informating sharing

(a) The liaison shall serve as an information source between the hospital, the PAs and other community agencies.

(b) The liaison shall establish a process for sharing client information between the PAs and the hospital.

(c) The liaison shall provide information and an assessment of the client's functioning in the community prior to hospitalization. This assessment shall be completed prior to the development of the comprehensive treatment plan.

(d) The assessment of community functioning shall include, but need not be limited to, the following:

1. Identifying data including the patient's date of admission, date of birth and service area on admission;

2. Names of organizations and contact persons who provide information;

3. Reasons for hospitalization;

4. Medications prior to admission, if known;

5. Patient's strengths, problems, and needs; and

6. Treatment recommendations including housing issues, financial support and other needed services.

(e) The liaison shall ensure that family and key providers receive opportunities to provide relevant information and to communicate with the PA and the hospital.

10:37G-2.4 Discharge oriented service planning

(a) Liaisons shall participate in their clients' discharge oriented service planning.

(b) The liaison shall minimally have one face-to-face contact with assigned clients in the hospital.

(c) The liaison shall communicate with the hospital staff responsible for their client's treatment and discharge planning to mutually determine the frequency and focus of liaison contacts during hospitalization.

(d) Procedures shall be established and documented for the liaison to share their recommendations for their client's preparation for discharge. This sharing may occur through a variety of mechanisms, including treatment team meetings, written notes, and other methods agreed to by the PA and the hospital.

10:37G-2.5 Linkage services

(a) The liaison shall ensure that clients are provided with needed appointments for services in the community after hospital discharge.

(b) The liaison shall obtain, distribute, and communicate patient information to ensure continuity of client care. This information shall include, but need not be limited to, the discharge and aftercare plan. The affiliation agreement between the hospital and the referral agency shall document the type of information to be shared and the procedures for its distribution.

(c) The liaison shall advocate for the earliest possible community appointment for the client. The liaison shall schedule needed mental health appointments within seven days of hospital discharge whenever possible.

(d) The liaison shall confirm the appointment for mental health services including medication follow-up, with the client and provide the client and the hospital with a written confirmation of appointment dates and locations obtained.

(e) The liaison shall advocate for a face-to-face appointment with a mental health agency within seven days of the client's hospital discharge. If no such appointment has been scheduled, the liaison shall conduct a face-to-face contact within 10 days of hospital discharge to assess the client's current status, determine the need for further interventions and provide interventions as appropriate.

(f) If a client fails to keep the initial scheduled mental health appointment, the liaison shall make a face-to-face contact within three working days, or document that attempts to make such contacts have been unsuccessful.

(g) If the client does not engage in service with a mental health provider, the liaison shall make weekly contact with the client for 60 days after hospital discharge. This may include home visits, telephone contacts or letters to encourage the client to engage in after-care services and to assist the client in accessing other needed services. Such contacts may be discontinued based on the client's current needs, expressed preferences or if clinically contraindicated.

(h) The liaison shall provide the following post hospital discharge services to clients enrolled in community mental health services: assessment, linkage to non-mental health resources, information sharing, advocacy and coordination of services and monitoring to ensure that the client remains engaged in needed services.

(i) The liaison shall provide services to each client for 60 days after hospital discharge unless the client no longer requires or desires liaison services. If the client requires services after 60 days, the liaison shall refer the client to clinical case management or other programs or maintain contact, as appropriate.

You're viewing an archived copy from the New Jersey State Library.

10:37G-2.6 Documentation

(a) The PA shall maintain individual clinical records for enrolled clients. Clinical records shall contain all relevant client information in a manner which is up-to-date and well organized. The PA shall maintain confidentiality of all records.

(b) The clinical record for each client shall contain the community assessment information, the hospital discharge aftercare plan and post-discharge follow-up reports.

(c) The post-discharge follow-up report shall be completed by the liaison within 75 days following the client's discharge from the hospital.

(d) A liaison service plan shall be documented in the client record for each client. This plan shall:

1. Reflect the hospital discharge and aftercare plan and the client's needs;

2. Contain service goals and objectives which are measurable and time framed;

3. Delineate specific interventions to attain objectives and goals and the staff members responsible for implementing each intervention; and

4. Reflect client input and family input whenever possible.

(e) The liaison service plan shall be documented in the progress notes or on a form developed by the PA.

(f) The liaison service plan shall be revised as needed.

(g) All entries in the clinical record shall be properly authenticated with the signature and title of the party making the entry and the date.

(h) The client's involvement in the development or revision of the plan shall be documented. The client shall sign the plan. If the client is unwilling to sign or if the client's signature is clinically contraindicated, this shall be documented.

(i) Progress notes shall be maintained in chronological order and shall include documentation of contact with clients, other agencies and significant others.

(j) Progress notes shall reflect the client's status, interventions provided and the client's progress towards reaching the goals and objectives contained in the plan.

(k) The liaison shall provide the hospital with written documentation of services provided to or on behalf of clients in accordance with procedures referenced in the affiliation agreement.

10:37G-2.7 Educational and experience requirements for liaisons

The liaison shall have a master's degree in social work, psychology, counseling, or a related field with clinical training; or a bachelor's degree in a related field with two years work experience in the provision of mental health or related services; or be licensed as a registered nurse and possess two years work experience in the provision of mental health or related services.

(a)

DIVISION OF YOUTH AND FAMILY SERVICES

Capital Funding Program for Community Based Substitute Care, General Social Service and Partial Care Facilities

Proposed Readoption with Amendments: N.J.A.C. 10:125

Authorized By: William Waldman, Commissioner, Department of Human Services.

Authority: N.J.S.A. 30:1-12, P.L. 1980, c.119, P.L. 1984, c.7 and P.L. 1989, c.184.

Proposal Number: PRN 1995-91.

Submit comments in writing by March 8, 1995 to:
Virginia Mastondrea
Capital Projects Unit
Division of Youth and Family Services
CN 717
Trenton, New Jersey 08625-0717

The agency proposal follows:

Summary

Pursuant to the requirements and criteria of Executive Order No. 66 (1978), N.J.A.C. 10:125 expires on June 4, 1995. As required by the Executive Order, the Division of Youth and Family Services (Division) has reviewed these rules and has determined them to be necessary, reasonable, and proper for the purpose for which they were originally promulgated. The Division proposes to readopt this chapter with amendments to reflect the Public Purpose Buildings and Community-Based Facilities Construction Bond Act of 1989.

The New Jersey Public Purpose Buildings Construction Bond Act of 1980 (P.L. 1980, c.119) authorized the issuance of $159 million in State bonds. Of this, $3.5 millon was allocated to the Division of Youth and Family Services for the improvement, rehabilitation, purchase and construction of community-based facilities to benefit the Department of Human Services' clients. These rules were developed to prioritize and set requirements for programs under the authority of the Division which require funding for capital expenditures which go beyond existing maintenance programs and support.

The New Jersey Human Services Facilities Construction Bond Act was passed in 1984 (P.L. 1984, c.7) and authorized the issuance of $33,199,000 in State bonds. The Division of Youth and Family Services was allocated $5,630,000 for purposes essentially similar to those of the 1980 Bond Act. Of this fund, $4,170,000 was set aside for community grants and $1,460,000 was earmarked for capital improvements to Division-owned properties which provide community services.

The Public Purpose Buildings and Community-Based Facilities Construction Bond Act of 1989 (P.L. 1989, c.184) authorized the issuance of $125 million in State bonds. The Division of Youth and Family Services was allocated $7,378,000 for purposes essentially similar to those of the 1980 and the 1984 Bond Acts. Of this fund, $5,878,000 was set aside for community grants and $1,500,000 was earmarked for capital improvements to Division-owned properties which provide community services.

These rules, which set priorities and program requirements for the 1980 Bond Act funds, were also used to establish the requirements for the 1984 and 1989 Bond Acts. These rules are now being amended to reflect their applicability to expenditures under the 1989 Bond Act as well. An amendment is also being proposed to include handicapping condition to the categories of individuals assured of non-discrimination at N.J.A.C. 10:125-3.5.

Subchapter 1 sets forth the legal authority, applicability, scope, purpose and definitions for the program, as well as funding and program priorities. Subchapter 2 contains funding stipulations for eligible agencies. Subchapter 3 contains rules governing program requirements.

Social Impact

The rules proposed for readoption with amendments will minimally affect agencies which provide the services for the Division but will substantially affect the clients of the Division who benefit from such services. The physical upgrading of facilities for clients will ensure to the extent possible that agencies will be providing services in facilities according to State and local standards.

Economic Impact

The anticipated economic impact of the rules proposed for readoption with amendments on the community agencies will be beneficial, as it allows for the continued operation of services while at the same time it provides for ongoing services. The economic impact on the clients will be negligible.

Of the 1980 Bond Act fund, approximately $180,000 remains to be obligated to eligible agencies. It is anticipated that this will be accomplished by December, 1995. Of the 1984 Bond Act fund, an additional allocation of $3,022,000 was given to the Division of Youth and Family Services for community grants.

Of these 1984 Bond Act funds, approximately $1,595,000 remains to be obligated to eligible agencies. It is anticipated that this will be accomplished by June, 1996. Of the 1989 Bond Act funds, approximately $4,204,000 remains to be obligated to eligible agencies. It is anticipated that it will take several years to disburse this fund completely.

Executive Order No. 27 Statement

The rules proposed for readoption with amendments do not contain subject matter governed by Federal law, regulation or other requirement, and, therefore, an Executive Order No. 27 analysis is not required.

You're viewing an archived copy from the New Jersey State Library.

Regulatory Flexibility Analysis

Twenty-two social service agencies have received funds under this program through the 1980 Bond Act, and it is estimated that 115 agencies (88 agencies approved to date, 27 pending approval) will receive funds through the 1984 Bond Act. It is estimated that 60 agencies (45 agencies approved to date, 15 pending approval) will receive funds through the 1989 Bond Act. Many of these agencies are small businesses as that term is defined in the Regulatory Flexibility Act, N.J.S.A. 52:14B-16 et seq. However, no additional costs for recordkeeping, reporting or bookkeeping requirements will be imposed by the continuance of these rules with amendments, since the agencies participating in this program perform these activities as part of their general business activities, and would do so whether or not these rules applied to them.

Full text of the proposed readoption may be found in the New Jersey Administrative Code at N.J.A.C. 10:125.

Full text of the proposed amendments follows (additions indicated in boldface **thus**; deletions indicated in brackets [thus]):

10:125-1.1 Legal authority, applicability, scope, purpose

(a) This chapter applies to State contracts for the renovation and construction of community based facilities. This chapter implements one portion of the New Jersey Public Purpose Buildings Construction Bond Act of 1980, [and] one portion of the New Jersey Human Services Facilities Construction Bond Act of 1984 **and one portion of the Public Purpose Buildings and Community-Based Facilities Construction Bond Act of 1989** and complements N.J.A.C. 10:3-2. The purpose of the program is to utilize funds from the New Jersey Public Purpose Buildings Construction Bond Act of 1980, [and] the New Jersey Human Services Facilities Construction Bond Act of 1984 **and the Public Purpose Buildings and Community-Based Facilities Construction Bond Act of 1989** to assist in the renovation, purchase and construction of community based substitute care, general social service and partial care facilities which provide services to families and children under the auspices of the Division of Youth and Family Services. The scope of this program is limited to the purposes mentioned above for those who are either parties to or candidates for a service contract with the Division.

(b) (No change.)

10:125-3.5 Assurance of non-discrimination

The Division shall obtain assurance from each applicant that all portions and services of the entire facility for the construction of which or in connection with which aid under the New Jersey Public Purpose Buildings Construction **Bond** Act of 1980 or under the New Jersey Human Services Facilities Construction Bond Act of 1984 **or under the Public Purpose Buildings and Community-Based Facilities Construction Bond Act of 1989** is sought shall be made available without discrimination on account of race, creed, color, [or] national origin[,] **or handicapping condition**; and that no professionally qualified person shall be discriminated against on account of race, creed, color, [or] national origin[,] **or handicapping condition** with respect to the privilege of professional practice in the facility.

(a)

DIVISION OF YOUTH AND FAMILY SERVICES
DYFS Utilization of Family Day Care Providers
Proposed Readoption: N.J.A.C. 10:126A

Authorized By: William Waldman, Commissioner, Department of Human Services.

Authority: N.J.S.A. 30:4C-4.

Proposal Number: PRN 1995-77.

Submit written comments by March 8, 1995 to:

Barbara Kraeger
Operational Policy and Manual Unit
Division of Youth and Family Services
CN 717
Trenton, New Jersey 08625

The agency proposal follows:

Summary

The Division of Youth and Family Services proposes to readopt N.J.A.C. 10:126A, DYFS Utilization of Family Day Care Providers, in order to continue providing the type of family day care needed by children supervised by the Division. Family day care is often used by the Division to relieve the effects of and to prevent child abuse and neglect or to provide relief needed by a child's family.

These rules require that the Division use and pay only registered family day care providers. In addition, the Division pays only family day care providers who care for a more limited number of children than N.J.A.C. 10:126, Manual of Requirements for Family Day Care Registration, allows. The rules authorize the Division's regional administrator to approve an exception to the maximum number of children cared for only when a provider assistant is present and the number of children does not exceed what is set out in N.J.A.C. 10:126-6.1, Maximum number of children.

The effect of these rules is to assure that children receiving family day care paid for by the Division are receiving high quality care which meets their special needs.

The readoption of these rules is necessary to continue the long-standing practice of the Division. The rule that the Division pays for family day care only when the number of children does not exceed five was found in N.J.A.C. 10:122B-1.3(a)4 until that rule expired September 10, 1989, and previously in N.J.A.C. 10:122-4.

These rules continue to be necessary for the Division to ensure that children under its supervision receive the type of service which they need to ameliorate problems of child abuse or neglect.

Social Impact

The effect of these rules is to assure that children who receive family day care services through the Division receive services which adequately meet their need for care. These rules apply only to children who are supervised by the Division and whose family day care is paid for by the Division. The Division's records indicate that 479 children received family day care in September, 1994.

The effects of the rules which require that the Division pay only family day care providers who are registered are that: the providers have access to the training and technical assistance offered by the sponsoring organization; and an additional population of children who need family day care is able to utilize their services. Some potential family day care providers may consider the process of applying to become registered, being evaluated by the sponsoring organization and attending pre-service training, as negative effects of continuing these rules. The Division considers them to be positive impacts which enable the provider to give a Division-supervised child the quality of care needed.

Economic Impact

Each Division-paid family day care provider is required to be registered under the provisions of N.J.A.C. 10:126. N.J.A.C. 10:126-5.5 requires that "the provider shall pay a non-refundable registration fee of $25.00 . . .," which covers a three year period. While this is an expense for the provider, it enables the provider to be: paid by the Division; listed in the New Jersey Child Care Resource and Referral System; and referred by the sponsoring organization to parents seeking family day care. Each of these effects can produce additional income for the provider.

For fiscal year 1994, which ended June 30, 1994, the Division paid $4,140,938 for family day care.

Executive Order No. 27 Statement

The rules proposed for readoption do not contain subject matter governed by Federal law, regulation or other requirement, and therefore an Executive Order No. 27 analysis is not required.

Regulatory Flexibility Analysis

The rules proposed for readoption affect New Jersey registered family day care providers who receive payment from the Division. All of these providers fall within the definition of a small business, as defined in the State Regulatory Flexibility Act, N.J.S.A. 52:14B-16 et seq. It is not necessary to establish different standards for larger or smaller providers, as all family day care providers are small businesses.

Each provider is required to keep attendance records for the child and to submit a monthly voucher for payment in order to be paid.

Initial compliance costs are the $25.00 registration fee, which covers a three-year period, and any expenses required to meet the registration requirements. For example, an applicant may need to pay for a medical

You're viewing an archived copy from the New Jersey State Library.

examination, if she has not had one within the previous six months, or the applicant may need to purchase one or more smoke detectors to meet the requirements of N.J.A.C. 10:126.

Annual compliance costs are the cost of postage. Every three years the $25.00 registration fee must be paid.

Full text of the proposed readoption may be found in the New Jersey Administrative Code at N.J.A.C. 10:126A.

(a)

DIVISION OF YOUTH AND FAMILY SERVICES

Reasonable Efforts; Reasonable and Diligent Efforts; and Necessary Activities to Achieve a Case Goal

Proposed New Rules: N.J.A.C. 10:133I

Authorized By: William Waldman, Commissioner, Department of Human Services.

Authority: 42 U.S.C. §670 et seq., 42 U.S.C. 620 et seq., N.J.S.A. 30:4C-1, N.J.S.A. 30:4C-3, N.J.S.A. 30:4C-66 to 73, N.J.S.A. 30:4C-74 to 83 and N.J.S.A. 9:6B-1 et seq.

Proposal Number: PRN 1995-92.

Submit comments by March 8, 1995 to:
Barbara Kraeger
Operational Policy and Manual Unit
Division of Youth and Family Services
CN 717
Trenton, New Jersey 08625

The agency proposal follows:

Summary

The Division of Youth and Family Services has undertaken a project to review and incorporate existing Division policy contained in the Division's Field Operations Casework Policy and Procedures Manuals into the New Jersey Administrative Code as rules. This project, known as the "Operations Policy to Rules" project, or OPTR, was initiated by the Division to subject those policies which have widespread coverage, continuing effect or a substantial impact on the rights or legitimate interests of the regulated public to the rulemaking process required by the New Jersey Administrative Procedure Act, N.J.S.A. 52:14B-1 et seq.

This proposal, N.J.A.C. 10:133I, Reasonable Efforts; Reasonable and Diligent Efforts; and Necessary Activities to Achieve a Case Goal, is a product of the OPTR Group, which is made up of members from private, non-profit groups which represent sectors of the affected public, Division staff members and representatives of other government agencies.

Public policy and law require the Division to preserve and strengthen family life. These proposed new rules describe the efforts that shall be made by the Division to achieve that end for families under its supervision. These rules describe the efforts made by the Division to enable families to remain intact, to enable families to be reunited when children are placed in out-of-home placements, and to enable children to achieve other permanent living arrangements when family reunification is not possible.

A summary of the proposed rules follows:

Proposed N.J.A.C. 10:133I-1.1 states the authority for these rules.

Proposed N.J.A.C. 10:133I-1.2 states the purpose of these rules.

Proposed N.J.A.C. 10:133I-1.3 states the scope of these rules.

Proposed N.J.A.C. 10:133I-1.4 references the definitions used in these rules.

Proposed N.J.A.C. 10:133I-1.5 states that the Division shall seek financial contributions or reimbursement for the services provided by the Division.

Proposed N.J.A.C. 10:133I-1.6 states that the failure of the family to cooperate does not mean that the Division has failed to make reasonable or diligent efforts and that the Division can remove a child from any home if the child has been seriously harmed or is at imminent risk of serious harm.

Proposed N.J.A.C. 10:133I-2.1 states that the Division shall screen and investigate cases and develop a case plan.

Proposed N.J.A.C. 10:133I-2.2 describes how the Division shall provide case management and services to families.

Proposed N.J.A.C. 10:133I-3.1 describes how the Division shall plan for out-of-home placement of a child.

Proposed N.J.A.C. 10:133I-3.2 states that the Division shall utilize Case Assessment Resource Teams as appropriate.

Proposed N.J.A.C. 10:133I-3.3 states the Division shall have the appropriate authority (N.J.S.A. 9:6-1 et seq., 30:4C-5, 11 or 12) for placement activity.

Proposed N.J.A.C. 10:133I-3.4 describes who the Division shall notify of the out-of-home placement and that the Division shall prepare a child for the out-of-home placement.

Proposed N.J.A.C. 10:133I-4.1 describes the Division's on-going activities with each family of a child in out-of-home placement.

Proposed N.J.A.C. 10:133I-4.2 describes the Division's case management activities and services to each family with a child in out-of-home placement.

Proposed N.J.A.C. 10:133I-5.1 describes when the Division shall consider an alternative permanent plan for a child in out-of-home placement.

Proposed N.J.A.C. 10:133I-5.2 describes the activities the Division shall pursue to achieve an alternative permanent plan for a child in out-of-home placement.

Social Impact

These proposed new rules apply to any child who is otherwise eligible for Division services pursuant to N.J.S.A. 30:4C-1 et seq. and 9:6-1 et seq., any child who is in an out-of-home placement and his or her family, and any child who is at risk of out-of-home placement and his or her family.

From January 1, 1993, to November 5, 1993, the Division had 33,208 referrals and applications for services. These referrals and applications related to 57,585 children. Of those, 19,146 referrals and applications contained an allegation of abuse or neglect for 34,004 children. A child who has been abused or neglected is at risk for out-of-home placement and thereby may be affected by the proposed rules.

As of the end of June, 1994, the Division supervised 7,927 children in out-of-home placement of which 5,662 children were in regular foster care. Of the population in regular foster care, 3,507 children had case goals other than to return home.

These rules will impact each family under Division supervision by providing guidelines for Division activities to maintain a child in his or her own home and by providing guidelines for permanency planning for each family with a child in out-of-home placement. These rules were developed in response to the OPTR Group's request to further delineate the requirement to make reasonable and diligent efforts pursuant to 42 U.S.C. §670 et seq., 42 U.S.C. 22620 et seq., and N.J.S.A. 30:4C-15 and 30:4C-15.1. These rules promote uniform interpretation of statutes and Supreme Court decisions but may result in an increased use of court intervention if a family fails to cooperate with permanency planning activities.

These proposed rules have been developed with extensive input from the members of the OPTR Group. The Division anticipates a positive response to this proposal because of this interaction.

Economic Impact

The proposed new rules do not introduce any major change to the Division's current operating practices nor is it likely to affect current funding sources. However, N.J.A.C. 10:133I-5.1 may clarify when an alternative permanent plan should be pursued, and thus abbreviate the length of time a child remains in an out-of-home placement. If, as a result of this clarification, more children have a case goal of adoption, both the Division and the Superior Court—Family Part may experience an increase in court involvement. As noted above, 3,507 children in out-of-home placements as of the end of June, 1994, had case goals other than return home. This increased court involvement may result in the need to assign more Deputy Attorneys General to the Division and more Superior Court judges to the judiciary. While a uniform approach to permanency planning may abbreviate the length of time a child remains in an out-of-home placement, fiscal benefits to the Division are likely to be offset by the increased demand on staff time and the increased service provision to achieve the permanent plan.

Executive Order No. 27 Statement

The proposed new rules contain subject matter governed by Federal law, specifically, 42 U.S.C. 670, Title IV-E, Federal Payments for Foster Care and Adoption Assistance, which contains the foster care and adoption provisions intended to keep families together, and to return children to their own homes after they have been in placement, and 42 U.S.C. 620, Title IV-B, Child Welfare Services, which contains the provisions

You're viewing an archived copy from the New Jersey State Library.

for services designed to keep families intact. The requirements contained in this proposal do not exceed the requirements contained in Federal law.

Regulatory Flexibility Statement

Neither the Division nor the public who are or who may be eligible to receive services from the Division is considered a small business under the terms of N.J.S.A. 52:14B-16 et seq., the Regulatory Flexibility Act. The proposed new rules do not impose reporting, recordkeeping or compliance requirements on small business. Therefore, a regulatory flexibility analysis is not required. These new rules state the Division's reasonable and diligent efforts to achieve permanency for children with their own families, with new families through adoption or long-term foster care custody, to achieve an independent living arrangement or to obtain other long-term specialized care.

Full text of the proposed new rules follows:

CHAPTER 133I
REASONABLE EFFORTS; REASONABLE AND DILIGENT EFFORTS; AND NECESSARY ACTIVITIES TO ACHIEVE A CASE GOAL

SUBCHAPTER 1. GENERAL PROVISIONS

10:133I-1.1 Authority

Pursuant to the Adoption Assistance and Child Welfare Act (AACWA), 42 U.S.C. §670 et seq., 42 U.S.C. 620 et seq., and the Federal regulations promulgated thereunder, and pursuant to N.J.S.A. 30:4C-1, 30:4C-3, 30:4C-15 and 15.1, 30:4C-66 to 73, 30:4C-74 to 83, and 9:6B-1 et seq., the Division of Youth and Family Services shall make reasonable efforts to prevent out-of-home placement of a child and make reasonable efforts to return a child in out-of-home placement to the parent. Pursuant to N.J.S.A. 30:4C-50 to 60, the Division shall pursue alternative living arrangements for children who do not return home from out-of-home placement.

10:133I-1.2 Purpose

(a) The purpose of this chapter is to describe the procedures used by the Division to:

1. Make reasonable efforts to prevent or alleviate the need for out-of-home placement of a child;

2. Make reasonable and diligent efforts to return a child home when an out-of-home placement has been necessary; and

3. Pursue necessary activities to achieve an alternative permanent living arrangement or independent living when a child cannot return home.

10:133I-1.3 Scope

The provisions of this chapter shall apply to any child who is otherwise eligible for Division services pursuant to N.J.S.A. 30:4C-1 et seq. and 9:6-1 et seq., any child who is in an out-of-home placement and his or her family, and any child who is at risk of out-of-home placement and his or her family and Division representatives. The Division shall provide services to achieve a case goal pursuant to N.J.A.C. 10:133C-4, except as delimited in N.J.A.C. 10:133I-1.7.

10:133I-1.4 Definitions

The definitions in N.J.A.C. 10:133I-1.3 are incorporated by reference herein.

10:133I-1.5 Legally responsible person

(a) The Division shall seek financial contributions or reimbursement for services provided to children from the appropriate person, association, system or organization pursuant to N.J.S.A. 30:4C-29.1 and 30:4C-22.

(b) Nothing in these rules shall obviate the financial responsibilities of any school district for the enrollment of children for educational purposes pursuant to N.J.S.A. 18A:46-1 et seq., N.J.S.A. 30:4C-26, U.S.P.L. 94-142 or N.J.A.C. 6:28-1.

10:133I-1.6 Family response, child protection and permanent plan

(a) Refusal by or failure of the parent or relative to cooperate with the Division in the development of a case plan or to access, utilize or benefit from services shall not be construed to mean that the Division has failed to make reasonable efforts or reasonable and diligent efforts pursuant to N.J.A.C. 10:133I-2 and 4.

(b) Nothing in this chapter shall preclude the Division from removing a child from his or her own home or from the home of a relative or any home of an individual standing in loco parentis when it appears that the child has been seriously harmed or is at imminent risk of serious harm, pursuant to N.J.S.A. 9:6-1 et seq. or N.J.S.A. 30:4C-1 et seq., and that the provision of available services may be insufficient to eliminate or reduce the imminent risk of serious harm.

SUBCHAPTER 2. REASONABLE EFFORTS TO MAINTAIN A CHILD IN HIS OR HER OWN HOME

10:133I-2.1 Assessment, protection and case plan

(a) The Division shall:

1. Conduct a screening of the referral in accordance with N.J.A.C. 10:133A and an assessment in accordance with N.J.A.C. 10:133C-3;

2. Provide information and referral in accordance with N.J.A.C. 10:133B;

3. Conduct an investigation when child abuse or neglect has been alleged in accordance with N.J.A.C. 10:129A;

4. Take such measures as are necessary to assure the immediate physical safety of the child and the provision of necessary medical treatment pursuant to N.J.S.A. 9:6-1 et seq.;

5. Identify relative and family friend resources who may be willing and able to assist the family; and

6. Select a case goal pursuant to N.J.A.C. 10:133C-4.5 and make a written case plan pursuant to N.J.A.C. 10:133D-2 to provide services.

10:133I-2.2 Case management and services

(a) The Division shall provide case management and services, according to the case plan, to the family pursuant to 42 U.S.C. §620 et seq., N.J.S.A. 30:4C-74 to 83 or N.J.S.A. 9:6B-4, and insure that the family has access to services by:

1. Enlisting the assistance of relatives and, where appropriate, family friends in the provision of services to the family;

2. Providing services directly; or

3. Arranging for, referring to or contracting with community service providers.

(b) The Division shall monitor the effectiveness of the service and change the services as needed on an on-going basis, through:

1. Consultation with the family or service provider or using direct observations to assess the use, benefit and accessibility of services; and

2. Identification of barriers to service provision or service utilization and the development and implementation of strategies to overcome the barriers within service limitations.

(c) The Division shall advise the family of the potential consequences if they fail to comply with the case plan or utilize the service(s).

(d) The Division shall advise the family of their rights and opportunities to dispute Division actions or decisions.

SUBCHAPTER 3. PREPARATION FOR OUT-OF-HOME PLACEMENT

10:133I-3.1 Out-of-home placement consideration

When the Division is considering out-of-home placement for a child, the Division shall hold a voluntary placement conference before the child is placed, whenever possible, but not later than 15 business days after the child is placed.

10:133I-3.2 CART referral

The Division shall make a referral to the Case Assessment Resource Team, CART, when the child is a member of the target population of clients as designated in N.J.S.A. 30:4C-69.

10:133I-3.3 Authority for placement

The Division shall place a child only with appropriate authority for the out-of-home placement of the child pursuant to N.J.S.A. 9:6-1 et seq., 30:4C-11, 30:4C-12 or 30:4C-5.

You're viewing an archived copy from the New Jersey State Library.

10:133I-3.4 Out-of-home placement

(a) When out-of-home placement of a child is necessary, the Division shall:

1. Inform the child's parents of the date of out-of-home placement, the type of out-of-home placement, the reasons for out-of-home placement and the efforts made to prevent out-of-home placement;

2. Provide information of the child's out-of-home placement to the Family Part of the Chancery Division of the Superior Court in the child's county of supervision pursuant to N.J.S.A. 30:4C-53 et seq.;

3. Prepare the child for out-of-home placement according to the age of the child and the time available for the preparation based on the emergent nature of the out-of-home placement activity;

4. Establish a visitation plan; and

5. Place the child in the least restrictive, most familiar, most proximate out-of-home placement available that can meet the child's needs including the exploration of relative and family friend resources pursuant to 42 U.S.C. §620 et seq. (AACWA), N.J.S.A. 9:6B-1 et seq. or N.J.S.A. 30:4C-50 et seq.

SUBCHAPTER 4. REASONABLE AND DILIGENT EFFORTS TO RETURN A CHILD HOME FROM AN OUT-OF-HOME PLACEMENT

10:133I-4.1 On-going activities

(a) On an on-going basis the Division shall complete the following activities:

1. Inform the parent at appropriate intervals of the child's progress, development and health pursuant to N.J.S.A. 30:4C-15 and 15.1, in accordance with the child's case plan;

2. Facilitate appropriate visitation for the child and his or her parent, siblings and interested relatives pursuant to N.J.A.C. 10:122D and N.J.S.A. 30:4C-15, 30:4C-15.1 and 9:6B-4, in accordance with the child's case plan; and

3. Inform the parent at appropriate intervals of changes, circumstances or conditions necessary to achieve family reunification, in accordance with the child's case plan.

(b) The Division shall make a written case plan pursuant to N.J.A.C. 10:133D-2 and shall review the progress of the case plan and advise the family of the potential consequences if they fail to comply with the case plan or utilize the service(s).

(c) The Division shall identify and evaluate relatives who may be willing and able to provide services to the family or the child pursuant to N.J.S.A. 30:4C-12.1.

(d) The Division shall advise the family of their rights and opportunities to dispute Division actions or decisions.

(e) The Division shall advise the family of its right to participate in child placement reviews pursuant to N.J.S.A. 30:4C-50 et seq.

10:133I-4.2 Case management and services

(a) The Division shall manage the case and provide services to the family according to the case plan, and pursuant to 42 U.S.C. §620 et seq. and N.J.S.A. 9:6B-1 et seq. by:

1. Enlisting the assistance of relatives or family friends in the provision of services to the family;

2. Providing services directly; or

3. Arranging for, referring to or contracting with community service providers.

(b) The Division shall monitor the effectiveness of the services and change the services, as needed, on an on-going basis, through:

1. Consultation with the family or service provider or using direct observations to assess the use, benefit and accessibility of services; and

2. Identification of barriers to service provision or service utilization and development and implementation of strategies to overcome the barriers within service limitations.

(c) The Division shall facilitate periodic review of the out-of-home placement pursuant to N.J.S.A. 30:4C-50 et seq., 42 U.S.C. §620 et seq. and N.J.A.C. 133H-3.

(d) The Division shall establish a case goal pursuant to N.J.A.C. 10:133C-4.5 and 4.6.

(e) The Division shall participate in on-going CART reviews when appropriate.

SUBCHAPTER 5. NECESSARY ACTIVITIES TO ACHIEVE A CASE GOAL

10:133I-5.1 Alternative permanent plans

(a) The Division shall consider alternative permanent plans for a child when:

1. Reasonable and diligent efforts to return the child home pursuant to N.J.A.C. 10:133I-4.1 and 4.2 have failed to enable the child to return home; and the Division's search for and assessment of relatives pursuant to N.J.S.A. 30:4C-12.1 indicate there are no relatives known, able and willing to meet the needs of the child; and the Division has determined that grounds exist pursuant to N.J.S.A. 30:4C-15 and 15.1 to petition the court to terminate parental rights;

2. The parent has relinquished or intends to voluntarily relinquish his or her parental rights to the child or the parental rights have been terminated in a court of competent jurisdiction or the parent's identity or whereabouts are unknown;

3. The child is orphaned or abandoned pursuant to N.J.S.A. 9:6-1 and N.J.S.A. 30:4C-15 and 30:4C-15.1;

4. The circumstances of a child in a foster home meet the criteria for long-term foster care custody as established in N.J.S.A. 30:4C-26.10 et seq.;

5. The child does not want to return home and is of sufficient age and maturity to make that determination, based upon a demonstration by the child to the Division representative that the child possesses such maturity; or

6. The psychological, medical, physical or educational needs of the child require an alternative permanent plan.

10:133I-5.2 Necessary activities

(a) The Division shall pursue necessary activities to achieve a case goal of permanency by placement with a relative or family friend, adoption, long-term foster care custody, independent living or other long-term, specialized care.

1. The Division shall continue to inform the parent at appropriate intervals of the child's progress, development, education and health unless parental rights have been terminated or surrendered or the whereabouts of the parent are unknown.

2. The Division shall utilize available resources including recruitment and publicity to identify permanent out-of-home placement resources in accordance with the best interests of the child.

3. The Division shall facilitate, as appropriate, a legal relationship between a child and a relative or family friend, adoptive parent, or foster parent whenever the legal or custodial relationship between the child and the birth parent has been surrendered, terminated or limited.

4. The Division shall pursue such permanency planning as will enable the child and his or her parent or new family to function independent of Division intervention, supervision or direct services.

5. The Division shall provide services and supports to enable the child to function independently.

You're viewing an archived copy from the New Jersey State Library.

CORRECTIONS

(a)

THE COMMISSIONER

Inmate Discipline

Inmate Prohibited Act; Refusal to Register as a Sex Offender

Proposed Amendment: N.J.A.C. 10A:4-4.1

Authorized By: William H. Fauver, Commissioner, Department of Corrections.

Authority: N.J.S.A. 30:1B-6. 30:1B-10 and 2C:52-2.

Proposal Number: PRN 1995-75.

Submit comments by March 8, 1995 to:
William H. Fauver, Commissioner
Department of Corrections
CN 863
Trenton, New Jersey 08625

The agency proposal follows:

Summary

P.L. 1994, c.133 supplementing Title 2C of the New Jersey Statutes and amending N.J.S.A. 2C:52-2 requires a system of registration for sex offenders. This system permits law enforcement officials to identify and alert appropriate individuals and organizations when necessary. A sex offender who fails to register as required under this statute shall be guilty of a crime of the fourth degree. The proposed amendment modifies N.J.A.C. 10A:4-4.1(a) to add refusal to register as a sex offender to the list of prohibited acts as "*.054." The addition of this prohibited act is to enable the correctional facility administration to charge an inmate who refuses to register. As an asterisked (*) offense, this prohibited act shall be considered a major violation and, upon a finding of guilt, renders the offender subject to more severe sanctions. Pursuant to N.J.A.C. 10A:4-4.2 the refusal to register as a sex offender shall be referred to the prosecutor of the county in which the correctional facility is located.

Social Impact

In the day to day management of a correctional facility, the disciplinary procedures and sanctions imposed for violation of rules are among the most important tools by which the correctional facility administration is able to maintain correctional facility stability, safety and order. The proposed amendment of adding "*.054 Refusal to register as a sex offender" to the list or prohibited acts will enable the correctional facility administration to initiate the disciplinary process when an inmate refuses to register. It is anticipated that those offenders required to register may oppose this regulation. However, it is the intent of the Department to comply with the law and safeguard the public at large.

Economic Impact

The proposed amendment delineates which specific prohibited act to use when charging the inmate with refusing to register as a sex offender as required by law. Additional costs are not necessary to implement or maintain this proposed amendment. However, since refusal to register is a crime of the fourth degree, and all refusals are referred to the office of the prosecutor, a long range economical impact will be incurred by the State or individual for those legal expenses associated with the prosecution and the resulting sentence imposed by the court.

Executive Order No. 27 Statement

An Executive Order No. 27 analysis is not required for the proposed amendment because the rulemaking requirements of the Department of Corrections are governed by N.J.S.A. 30:1B-6 and 30:1B-10. The proposed amendment is not subject to any Federal requirements or standards.

Regulatory Flexibility Statement

The proposed amendment to the rule does not place any reporting, recordkeeping or compliance requirements on small businesses as the term is defined by the Regulatory Flexibility Act, N.J.S.A. 52:14B-16 et seq. The proposed amendment affects inmates and governmental entities responsible for the enforcement of the rule.

Full text of the proposal follows (additions indicated in boldface **thus**; deletions indicated in brackets [thus]):

10A:4-4.1 Prohibited Acts

(a) An inmate who commits one or more of the following numbered prohibited acts shall be subject to disciplinary action and a sanction that is imposed by a Disciplinary Hearing Officer or Adjustment Committee. Prohibited acts preceded by an asterisk are considered the most serious and result in the most severe sanctions (See N.J.A.C. 10A:4-5, Schedule of Sanctions For Prohibited Acts).

*.001-.053 (No change.)

***.054 Refusal to register as a sex offender**

.101-.803 (No change.)

(b) (No change.)

(b)

THE COMMISSIONER

Juvenile Records

Proposed Amendments: N.J.A.C. 10A:22-2.10

Authorized By: William H. Fauver, Commissioner, Department of Corrections.

Authority: N.J.S.A. 30:1B-6, 30:1B-10 and N.J.S.A. 2A:4A-60.

Proposal Number: PRN 1995-84.

Submit comments by March 8, 1995 to:
William H. Fauver, Commissioner
Department of Corrections
CN 863
Trenton, New Jersey 08625

The agency proposal follows:

Summary

N.J.A.C. 10A:22-2.10 is proposed to be amended in order for the Department of Corrections to be in compliance with N.J.S.A. 2A:4A-60 and revisions to it under P.L. 1994, d.56. The proposed amendments clarify under what conditions and to whom juvenile records can be made available. Specifically, at N.J.A.C. 10A:22-2.10(b) text is proposed that will allow the release of records to law enforcement agencies of New Jersey, another state or to the United States; to a person or agency by court order; and to any institution to which the juvenile is committed. At N.J.A.C. 10A:22-10(c) proposed amendments regarding the release of records to the principal of the school where the juvenile is enrolled allows the principal to make records available to staff and faculty in order to maintain order, safety or discipline, provided that no record of such information shall be maintained except as authorized by regulations of the Department of Education.

Social Impact

The amendments to N.J.A.C. 10A:22-2.10 are proposed by the Department of Corrections in order to be in compliance with the newly revised statutes that clarify the availability of information related to juveniles. The intent of these amendments is to enable keepers of juvenile records to provide pertinent information to the appropriate individuals in order to facilitate juvenile justice proceedings and to help ensure order, safety and discipline in the school where the juvenile is enrolled or the institution to which the juvenile is committed.

Economic Impact

The proposed amendments should not result in any new economic impact for the Department of Corrections because additional funding is not required to implement or maintain these rules. Maintenance of juvenile records and the handling of these records are part of the administrative cost of operation and as such, are regularly budgeted items.

Executive Order No. 27 Statement

An Executive Order No. 27 analysis is not required for the proposed amendments because the rulemaking requirements of the Department of Corrections are governed by N.J.S.A. 30:1B-6 and 30:1B-10. The proposed amendments are not subject to any Federal requirements or standards.

Regulatory Flexibility Statement

A regulatory flexibility analysis is not required because the proposed amendments do not impose reporting, recordkeeping or other compliance requirements on small businesses, as defined under the Reg-

You're viewing an archived copy from the New Jersey State Library.

ulatory Flexibility Act, N.J.S.A. 52:14B-16 et seq. The proposed amendments impact on inmates and the New Jersey Department of Corrections and have no affect on small businesses.

Full text of the proposal follows (additions indicated in boldface **thus**; deletions indicated in brackets [thus]):

10A:22-2.10 Juvenile records

(a) (No change.)

(b) Juvenile records shall be made available only to the following agencies or persons:

1.-6. (No change.)

7. The Division of Youth and Family Services, if providing care or custody of the juvenile; [or]

8. A law enforcement agency [when such records are necessary in connection with the apprehension or location of a juvenile, or the investigation of crime or delinquency] **of New Jersey, another state or the United States for the purposes of law enforcement; or**

9. Any person or agency interested in a case or in the work of the agency keeping the records, by order of the court for good cause shown; and

10. Any institution to which the juvenile is currently committed.

(c) Pursuant to N.J.S.A. 2A:4A-60, **at the time of charge, adjudication or disposition,** information as to the identity of a juvenile **charged with an offense**, the offense charged, the adjudication and disposition shall, **upon request,** be disclosed to:

1.-4. (No change.)

5. A party in a subsequent legal proceeding involving the juvenile, [but only] upon **approval by the** court [order]; or

6. The principal, on a confidential basis, of the school where the juvenile is enrolled for use by the principal [or his or her designee in] **and such members of the staff and faculty of the school as the principal deems appropriate for maintaining order, safety, or discipline in the school or to** planning programs relevant to the juvenile's educational and social development[. The principal shall be advised that this information shall not become part of the juvenile's permanent school records] **provided that no record of such information shall be maintained except as authorized by regulation of the Department of Education.**

INSURANCE

(a)

DIVISION OF ENFORCEMENT AND CONSUMER PROTECTION

Auto Physical Damage Claims

Proposed Amendment: N.J.A.C. 11:3-10.3

Authorized By: Andrew J. Karpinski, Commissioner, Department of Insurance.

Authority: N.J.S.A. 17:1-8.1, 17:1C-6(e), 17:29B-1 et seq. and 17B:30-1 et seq.

Proposal Number: PRN 1995-89.

Submit comments by March 8, 1995 to:

Donald Bryan
Assistant Commissioner
New Jersey Department of Insurance
Division of Legislative and Regulatory Affairs
20 West State Street
CN 325
Trenton, New Jersey 08625

The agency proposal follows:

Summary

The Department of Insurance ("Department") is proposing amendments to its rules which govern the manner in which automobile physical damage claims are handled. Currently N.J.A.C. 11:3-10.3(e) permits an insured who files a claim for reimbursement under his or her automobile physical damage insurance to use any repair facility of his or her choice. The Department's proposed amendment still permits the insured the freedom to choose among repair facilities, but the amendment provides the insured with this option prior to entering a contract for insurance; that is, the insured may elect to purchase a policy which provides that only certain facilities will be used to repair the automobile in the event of a physical damage claim.

The proposed amendment to N.J.A.C. 11:3-10.3(1) will permit insurers to pay benefits directly to the repair facility if the insured made the selection of facilities upon entering into the contract for insurance.

Social Impact

The proposed amendment will benefit both insureds and insurers. The Department believes that its proposed amendment will result in insureds being offered optional lower rates for physical damage coverage if the insured chooses to use only certain repair facilities when the policy is purchased. The Department believes that this relaxation of the present rules will permit and encourage insurers to develop more efficient methods to contain the costs associated with automobile physical damage repair claims.

Economic Impact

The proposed amendment will impact only those insurers that choose to revise their policy forms and their insureds that choose to purchase the optional form of coverage. The Department believes that this amendment will have a beneficial economic impact on both insureds and insurers. The Department anticipates that these amendments will result in optional lower physical damage rates for insureds. The Department further believes that the relaxation of the Department's rules will enable insurers to have more flexibility in controlling losses from physical damage claims. The Department anticipates that this amendment may have an economic impact on auto body repair facilities. Some auto body repair facilities may see their business increase and others may not see any change.

Executive Order No. 27 Statement

An Executive Order No. 27 analysis is not required because these amendments are subject to the requirements of N.J.S.A. 17:1-8.1, 17:1C(6), 17:29B-1 et seq. and 17B:30-1 et seq. and are not subject to any Federal requirements or standards.

Regulatory Flexibility Analysis

This proposed amendment may apply to "small businesses" as that term is defined in the Regulatory Flexibility Act, N.J.S.A. 52:14B-16 et seq. To the extent the amendment applies to small businesses, they will be insurers authorized to transact private passenger automobile insurance in this State. These insurers will be required to adhere to the requirements of this amendment regarding the insureds right to choose among repair facilities. The proposed amendment permits all insurers to offer optional policies that designate certain automobile facilities to be utilized for physical damage claims.

The proposed amendment provides no different compliance requirements based on business size. In the interest of consistency and uniformity, no differentiation is provided based on insurer size. The Department notes that the proposed amendment permits all insurers increased flexibility in the policies they may offer, and do not mandate any change.

Full text of the proposal follows (additions indicated in boldface **thus**; deletions indicated in brackets [thus]):

11:3-10.3 Adjustment of partial loss

(a)-(d) (No change.)

(e) Subject to the requirements of (d) above, the insured may use any repair facility of his or her own choice. **The insured's selection of facilities may be made upon entering into a contract for insurance by affirmatively accepting optional policy provisions that provide that only certain specified facilities will be used for automobile repairs, and a selection so made is binding on the insured.** With respect to automobile damage claims, the insurer shall notify in writing any insured who elects to use his or her own repair facility that, pursuant to law, any entity engaged in the business of auto body repairs must be duly licensed. The notice shall further advice the insured that the insurer is prohibited by law from negotiating, adjusting or settling an automobile damage claim with an unlicensed facility. The written notice shall be furnished at the time of acknowledgment of the claim as provided at N.J.A.C. 11:2-17.6 or upon the furnishing of its written estimate, as specified at (c) above, whichever is sooner. The insurer must make all reasonable

You're viewing an archived copy from the New Jersey State Library.

efforts to obtain an agreed price with the facility selected by the insured. The insurer may recommend, and if the insured requests, must recommend a qualified repair facility at a location reasonably convenient to the insured motor vehicle who will repair the damaged motor vehicle at the insurer's estimated cost of repairs, but in either event the provisions of (g) below apply.

(f)-(k) (No change.)

(l) The insured shall have the right to receive the proceeds of any settlement. The insurer may not insist on making settlement proceeds jointly payable to the insured and the repair facility, or payable to the repair facility only. **If the insured has exercised his or her right to accept the optional policy provisions that provide that only certain specified facilities will be used for automobile repairs, the insurer may pay settlement proceeds directly to the repair facility.**

(m) (No change.)

(a)

NEW JERSEY SMALL EMPLOYER HEALTH BENEFITS PROGRAM BOARD

Small Employer Health Benefits Program Board Structure and Meetings; Authorization of Assessments and Expenditures

Proposed Amendment: N.J.A.C. 11:21-2.5

Authorized By: New Jersey Small Employer Health Benefits Program Board, Kevin O'Leary, Executive Director.

Authority: N.J.S.A. 17B:27A-17 et seq., as amended by N.J.S.A. 17B:27A-51, P.L.1994, c.11, and P.L.1994, c.97.

Proposal Number: PRN 1995-68.

Submit written comments by March 10, 1995 to:

Kevin O'Leary
Executive Director
New Jersey Small Employer Health Benefits Program
20 West State Street, 10th Floor
CN 325
Trenton, New Jersey 08625

The agency proposal follows:

Summary

Pursuant to N.J.S.A. 17B:27A-30, and concurrent with this proposal, this proposed amendment to the SEH Program's Plan of Operation is also being submitted to the Commissioner of Insurance for review and approval. The SEH Act requires submission of any amendments to the Plan of Operation to the Commissioner, and provides that the Commissioner shall, after notice and a hearing, approve the Plan amendments if he finds that they are reasonable and equitable and sufficiently carry out the provisions of the SEH Act. The Commissioner's hearing will be noticed, and held on or about the same date as the close of the comment period established by the Board, March 10. This proposed amendment shall not become effective until after the Commissioner has provided written approval thereof, or shall be deemed approved if not expressly disapproved by the Commissioner in writing within 90 days of receipt by the Commissioner. The Board proposes the amendment pursuant to the provisions of the Administrative Procedure Act as permitted by N.J.S.A. 17B:27A-51g.

The Board proposes a new subsection, N.J.A.C. 11:21-2.5(m), which would require the affirmative vote of at least two-thirds of the Directors present at a meeting to authorize assessments and the expenditure of program funds. Pursuant to N.J.A.C. 11:21-2.5(c), the acts of the majority of the Directors present at a meeting are the acts of the Board, unless otherwise set forth in the Plan of Operation. The Board believes that assessments under the SEH Program and the expenditure of Program funds are of such importance, that a vote greater than a simple majority should be required. The Board takes this action as Board membership increases from 11 Directors to 18 Directors as a result of the passage of P.L.1994, c.97. This recent statutory amendment adds new Director positions for one person representing minority small employers, two insurance producers, one representative of organized labor, one physician, and two persons representing the general public and who are not employees of a health benefits plan provider.

Social Impact

The proposed amendment to the Plan of Operation may affect carriers in the small employer market. Since Program funds are derived solely from assessments on carriers in the small employer market, the proposed requirement of a supermajority may, in some circumstances, restrict the expenditure of Program funds and thus reduce each carrier's share of administrative assessments.

Economic Impact

The proposed amendment, N.J.A.C. 11:21-2.5(m), is not expected to have a significant economic effect. Since the assessment process is clearly set forth by statute and in the SEH Program's regulations, the assessment of carriers generally is not a matter that is susceptible to disagreement among Board members. The expenditure of Program funds, while more susceptible to disagreement than the assessment of carriers, would only be affected by this amendment when a Board vote on the expenditure of funds obtains a majority, but fails to gain a two-thirds majority. Thus, only when a vote gains a majority but fails to gain a two-thirds majority would the proposed amendment restrict the expenditure of Program funds, thus impacting on carriers in the small employer market.

Regulatory Flexibility Statement

A regulatory flexibility analysis is not required because the proposed amendment does not impose reporting, recordkeeping or other compliance requirements on small businesses, as defined under the Regulatory Flexibility Act, N.J.S.A. 52:14B-16 et seq. The amendment merely addresses the SEH Board's voting procedures.

Full text of the proposal follows (additions indicated in boldface **thus**):

11:21-2.5 Board structure and meetings

(a)-(l) (No change.)

(m) The affirmative vote of at least two-thirds of the Directors present at a meeting shall be required to authorize assessments and the expenditure of Program funds.

(b)

OFFICE OF THE COMMISSIONER

Notice of Public Hearing

New Jersey Small Employer Health Benefits Program Small Employer Health Benfits Program Plan of Operation

Proposed Amendment: N.J.A.C. 11:21-2.5

Take notice that, pursuant to N.J.S.A. 17B:27A-30, the Department of Insurance (Department) will hold a public hearing regarding an amendment proposed by the New Jersey Small Employer Health Benefits (SEH) Program Board of Directors (Board) to the SEH Program's Plan of Operation (Plan). The proposed amendment requires an affirmative vote of at least two-thirds of the Board's Directors present at a Board meeting to authorize assessments and the expenditure of Program funds. The hearing shall be held by the Department as set forth below:

Date: Wednesday, March 15, 1995 at 9:00 A.M.
Location: Department of Insurance
Mary G. Roebling Building
2nd Floor
20 West State Street
Trenton, NJ 08625

The purpose of the hearing is to receive public comment on the proposed amendment to the SEH Program's Plan (set forth at N.J.A.C. 11:21-2). The amendment was submitted to the Commissioner on December 19, 1994 pursuant to N.J.S.A. 17B:27A-30, and is published elsewhere in this issue of the New Jersey Register. The statute provides that the Plan and any subsequent amendment thereto shall be submitted by the SEH Program Board to the Commissioner who shall, after notice and a hearing, approve the Plan if he finds that it is reasonable and equitable and sufficiently carries out the provisions of N.J.S.A. 17B:27A-17 et seq. The Plan or any subsequent amendments shall become effective after the Commissioner has provided written approval thereof, or shall be deemed approved if not expressly disapproved by the Commissioner in writing within 90 days of receipt by the Commissioner.

You're viewing an archived copy from the New Jersey State Library.

The hearing shall be conducted by a hearing officer designated by the Commissioner. A verbatim transcript of the hearing shall be prepared by a certified stenographic reporter. Interested parties may obtain a copy of the transcript by ordering it directly from the reporter at the hearing or thereafter.

At the hearing, interested parties may present oral comment about the proposed amendment to the Plan. Any person intending to speak at the hearing should so advise the Department, in writing, no later than March 10, 1995 by mailing a statement of their intent to speak, along with their name and the name of the organization which they represent, if any, to:

Donald Bryan
Assistant Commissioner
Legislative and Regulatory Affairs
New Jersey Department of Insurance
20 West State Street
CN 325
Trenton, NJ 08625-0325

Oral testimony will be limited to a maximum of five minutes per person or organization. Persons who do not submit a written intent to speak will be permitted to present comments only after the presentation of testimony from persons who submitted written intent to speak in a timely manner.

Take further notice that a copy of the SEH Board's proposed amendment to its Plan may be inspected or obtained by interested parties directly from the SEH Program Board. Additionally, written comments on the proposed amendment will be accepted by the SEH Program Board until March 10, 1995. To request a copy or to submit written comments write to:

New Jersey Small Employer Health Benefits Program
20 West State Street
CN 325
Trenton, New Jersey 08625

(a)

NEW JERSEY SMALL EMPLOYER HEALTH BENEFITS PROGRAM BOARD

Small Employer Health Benefits Program Policy Forms; Compliance and Variability Rider

Proposed New Rules: N.J.A.C. 11:21-4.4 and Exhibit DD

Authorized By: New Jersey Small Employer Health Benefits Program Board, Kevin O'Leary, Executive Director.

Authority: N.J.S.A. 17B:27A-17 et seq., as amended by N.J.S.A. 17B:27A-51, P.L. 1994, c.11 and P.L. 1994, c.97.

Proposal Number: PRN 1995-90.

Submit written comments by March 8, 1995 to:

Kevin O'Leary
Executive Director
New Jersey Small Employer Health Benefits Program
20 West State Street, 10th Floor
CN 325
Trenton, New Jersey 08625

The agency proposal follows:

Summary

The Board proposes a new rule, N.J.A.C. 11:21-4.4, which would permit carriers to use a "compliance and variability rider" to incorporate regulatory changes promulgated by the Board to standard health benefit plans. The new rule would permit carriers to use the rider for up to one year from the date the Board has promulgated changes to the standard health benefits plans. The proposed new rule would also permit carriers to use a compliance and variability rider to make changes to inforce standard health benefit plans that are consistent with the variability outlined in Exhibit K of the Appendix to N.J.A.C. 11:21. The changes permitted by the new rule would be made consistent with the form proposed as Exhibit DD in the Appendix to N.J.A.C. 11:21. The compliance and variability rider may not be used in lieu of optional benefit riders which are subject to filing requirements as set forth in N.J.A.C. 11:21-3.2.

The purpose of the proposed new rules is to allow carriers some flexibility in making required regulatory changes or minor changes as permitted as variable text. Without a compliance and variability rider, carriers would be forced to issue new forms after the Board has promulgated changes to the forms, or carriers would be forced to issue new forms for small administrative changes to the policies such as changes to the employer's address or changes to the employer's deductible option.

Social Impact

The proposed new rules will impact on carriers in the small group market. The new rules should have the result of reducing the administrative burden on carriers by making it easier and less costly for them to make changes to health benefits policies or contracts to meet regulatory revisions. Carriers will no longer be required to issue a complete set of new forms for changes permitted by the compliance and variability rider.

Economic Impact

The proposed new rule should result in some savings to carriers. First, the proposed new rule will reduce the amount of paper necessary to effectuate changes permitted by the compliance and variability rider. Second, when the Board promulgates changes to the standard forms, carriers will be permitted to exhaust their supply of printed policy forms for up to one year, if they so choose, thus reducing printing costs.

Executive Order No. 27 Statement

An Executive Order No. 27 analysis is not required because rider filings in the New Jersey small employer health benefits market are dictated by N.J.S.A. 17B-27A-17 et seq., and are not subject to any Federal requirements or standards.

Regulatory Flexibility Statement

A regulatory flexibility analysis is not required because the proposed new rules do not impose reporting, recordkeeping or other compliance requirements on small businesses, as defined under the Regulatory Flexibility Act, N.J.S.A. 52:14B-16 et seq. In fact, the proposed new rules are designed to provide carriers with flexibility to effectuate limited changes, as permitted in the proposed rules, to health benefits plans.

Full text of the proposed new rules follows:

11:21-4.4 Compliance and variability rider

(a) Notwithstanding the requirements of N.J.A.C. 11:21-4.1, members may incorporate regulatory changes required to be made to the standard policy forms, standard HMO contract, certificates, and evidence of coverage for Plans A, B, C, D, E and HMO and for the standard riders promulgated by the Board, through the use of the Compliance and Variability Rider as set forth as Exhibit DD of the Appendix, incorporated herein by reference, subject to the following:

1. The Compliance and Variability Rider may be issued by members to incorporate changes to the standard policy forms, HMO contract, certificates, evidence of coverage, or standard riders promulgated by the Board, for one calendar year after the date the Board has promulgated such changes. Nothing contained in this section shall prevent a member from issuing a standard policy form, HMO contract, certificates, evidence of coverage or standard rider which has incorporated Board promulgated changes within one year of the Board's promulgation of such changes.

2. No member shall issue a Compliance and Variability Rider to incorporate changes to the standard policy forms, HMO contract, certificates, evidence of coverage, or standard riders promulgated by the Board more than one year after the date the Board has promulgated such changes.

(b) Notwithstanding the requirements of N.J.A.C. 11:21-4.1, members may make any changes to the standard policy forms, standard HMO contract, certificates, and evidence of coverage for Plans A, B, C, D, E and HMO and for the standard riders promulgated by the Board consistent with the variability as explained in Exhibit K to the chapter Appendix through the use of the Compliance and Variability Rider as set forth as Exhibit DD of the Appendix.

(c) Members may use the Compliance and Variability Rider only as permitted by (a) and (b) above. In no event shall the Compliance

You're viewing an archived copy from the New Jersey State Library.

and Variability Rider be used in lieu of optional benefit riders which riders are subject to filing requirements set forth in N.J.A.C. 11:21-3.2(d).

Exhibit DD

[Carrier]

AMENDMENT

[Policyholder]

Group [Policy] No.

Effective Date:

[

]

This Amendment is part of the [Policy]. Except as stated above, nothing in this Amendment changes or affects any other terms of the [Policy].

[Carrier shall insert its standard amendment closure and signature blocks.]

LAW AND PUBLIC SAFETY

(a)

DIVISION OF MOTOR VEHICLES

Motorized Bicycles

Proposed Readoption with Amendments: N.J.A.C. 13:25

Authorized By: C. Richard Kamin, Director, Division of Motor Vehicles.

Authority: N.J.S.A. 39:2-3, 39:3-10a, 39:4-14.3, 39:4-14.3a et seq. and 39:5-30.

Proposal Number: PRN 1995-96.

Submit written comments by March 8, 1995 to:
C. Richard Kamin, Director
Division of Motor Vehicles
Attention: Legal Staff
225 East State Street
CN 162
Trenton, New Jersey 08666-0162

The agency proposal follows:

Summary

The Division of Motor Vehicles (Division) proposes to readopt with amendments the provisions of N.J.A.C. 13:25 concerning motorized bicycles in accordance with the "sunset" and other provisions of Executive Order No. 66(1978). These rules expire on March 16, 1995.

The rules contained in N.J.A.C. 13:25 implement various provisions of the Motor Vehicle and Traffic Law (N.J.S.A. 39:1-1 et seq.) pertaining to the operation of motorized bicycles (which are also known as "mopeds"). The Division of Motor Vehicles has reviewed N.J.A.C. 13:25 in accordance with Executive Order No. 66(1978) and has determined that said rules are "necessary, adequate, reasonable, efficient, understandable and responsive to the purpose for which they were promulgated," but has also determined to propose amendments to various rules contained in said subchapters as part of this proposal. Many of the rules contained in N.J.A.C. 13:25 implement the public policy of this State as set forth in the Motor Vehicle and Traffic Law; namely, to foster highway safety by limiting licensure to those who can demonstrate an ability to operate motorized bicycles safely.

N.J.A.C. 13:25 contains nine subchapters which are summarized below:

Subchapter 1 sets forth the definitions of certain terms which are used in N.J.A.C. 13:25. The proposal adds a definition of the term "Director." The proposal also deletes unnecessary verbiage from the definition of "motorized bicycle driving test" and changes verbiage in the definition of "permit."

Subchapter 2 sets forth the requirements which must be met by an applicant seeking to obtain a motorized bicycle learner's permit.

Subchapter 3 sets forth the requirements which must be met by an applicant seeking to obtain a motorized bicycle license. The subchapter also contains several provisions pertaining to the issuance of motorized bicycle licenses by the Division.

N.J.A.C. 13:25-3.4(a) is amended to provide that an individual may neither apply for nor receive a motorized bicycle license during a period of suspension or revocation of any of his or her driving privileges. Subsection (b) is amended to provide that an individual may neither apply for nor receive any class of driver license during a period of suspension or revocation of his or her motorized bicycle operating privileges. Subsection (c) is deleted.

N.J.A.C. 13:25-3.6 is amended in that subsection (f) is deleted. That subsection, which pertained to the administration of an oral test to motorized bicycle license applicants who had failed the written test three times, does not conform to Division practice and is therefore appropriate for deletion from the rule. A reference to said subsection in N.J.A.C. 13:25-3.7(a) is likewise deleted by the proposal.

N.J.A.C. 13:25-3.7 is amended to provide that an oral test of motorized bicycle license applicants shall consist in part of slides, transparencies or other facsimiles which can be used to show the image of official traffic control devices. Technical amendments to the text of the rule are also proposed.

N.J.A.C. 13:25-3.9(e) is amended to provide that if a special device or equipment is used or needed to meet the minimum visual acuity requirements set forth in the section, the matter may be referred to the Director or his or her designee for final determination.

Amendments of a technical nature to the text of N.J.A.C. 13:25-3.10(b), 3.11, 3.12(a), 3.13 and 3.14 are included as part of this proposal. The term "motorized bicycle operator's license" in N.J.A.C. 13:25-3.10(b) and 3.11 is changed to "motorized bicycle license." The term "motorized bicycle operating test" in the heading of N.J.A.C. 13:25-3.11, and in the heading and text of N.J.A.C. 13:25-3.12(a) and 3.14, is changed to "motorized bicycle driving test." The term "operating demonstration" in the heading and text of N.J.A.C. 13:25-3.13 is changed to "driving demonstration."

The heading and text of N.J.A.C. 13:25-3.15 are amended. The term "motorized bicycle operator license" in the section heading and in the text of subsection (a) is changed to "motorized bicycle license." Subsection (b) of the rule is deleted and replaced by a new subsection which provides that photo licenses shall be mandatory for all initial motorized bicycle licensees and for motorized bicycle license renewals issued to applicants therefor who are under the age of 21. Subsection (c) is added and provides that the fee for issuance of a motorized bicycle license with a photo shall be $2.00. Subsection (d) is added and provides that no fee shall be charged for issuance of a motorized bicycle license renewal without a photo.

The Division proposes a new rule at N.J.A.C. 13:25-3.16 pertaining to license and registration restoration fees. The proposed new rule provides that a fee of $50.00 shall be payable to the Director for the restoration of any license which has been suspended or revoked by reason of the licensee's violation of any law or regulation. The proposed new rule further provides that a fee of $50.00 shall be payable to the Director for the restoration of vehicle registrations which have been suspended or revoked by reason of the registrant's violation of any law. The proposed new rule is in conformity with N.J.S.A. 39:3-10a as amended by section 14 of P.L. 1994, c.60.

The heading and text of N.J.A.C. 13:25-3.19 are amended. As amended, the rule provides that a person's motorized bicycle license shall become null and void upon issuance to the person of a valid basic driver's license or motorcycle license in the State of New Jersey, and the motorized bicycle license shall be surrendered to the Division at the time of such issuance.

Subchapter 4 sets forth rules pertaining to the issuance and/or retention of motorized bicycle learner's permits or motorized bicycle licenses with regard to persons who suffer or have suffered from convulsive seizures.The subchapter also contains several provisions pertaining to the Division of Motor Vehicles' suspension and/or restoration of the motorized bicycle operating privileges of such persons.

The proposal significantly amends N.J.A.C. 13:25-4 and supplements it with a new rule to bring it into conformity with existing Division procedures and the Division's convulsive seizure rules codified at N.J.A.C. 13:19-5 which pertain to motor vehicle licensees, permittees, and applicants. Since both N.J.A.C. 13:25-4 and 13:19-5 pertain to the

You're viewing an archived copy from the New Jersey State Library.

same subject matter, namely, convulsive seizures, it is appropriate that N.J.A.C. 13:25-4 be amended so as to conform it to current Division practice regarding this subject as reflected in N.J.A.C. 13:19-5.

N.J.A.C. 13:25-4.1 is amended to provide that any person who suffers or who has suffered from recurrent convulsive seizures, recurrent periods of impaired consciousness or from impairment or loss of motor coordination due to conditions such as, but not limited to, epilepsy, in any of its forms, shall as a prerequisite to the issuance of a motorized bicycle learner's permit or motorized bicycle license, renewal of a motorized bicycle license or retention of a motorized bicycle license establish to the satisfaction of the Director that he or she has been free from recurrent convulsive seizures, recurrent periods of impaired consciousness or from impairment or loss of motor coordination for a period of one year with or without medication and that he or she is physically qualified to operate a motorized bicycle.

N.J.A.C. 13:25-4.2 is amended to provide that when it appears to the Director that a licensed motorized bicycle operator or an applicant for a motorized bicycle learner's permit or motorized bicycle license suffers or has suffered from recurrent convulsive seizures, recurrent periods of impaired consciousness or from impairment or loss of motor coordination, the Director may, upon notice and an opportunity to be heard, suspend the motorized bicycle operating privilege of, or refuse to issue a motorized bicycle license to, such person as physically unqualified to operate a motorized bicycle with safety; provided, however, the Director may, in the exercise of his or her discretion, suspend such motorized bicycle license or refuse to issue such motorized bicycle learner's permit or motorized bicycle license pending hearing, if it shall appear to the Director to be in the interest of public safety that immediate action be taken.

N.J.A.C. 13:25-4.3 as amended provides that when it appears to the Director that a licensed motorized bicycle operator or an applicant for a motorized bicycle learner's permit or motorized bicycle license suffers or has suffered from recurrent convulsive seizures, recurrent periods of impaired consciousness or from impairment or loss of motor coordination, he or she may require from such person on forms approved by the Director: a statement by the applicant or licensee of his or her case history; a statement by the treating physician including diagnosis, treatment and prognosis; and any other information which the Director deems necessary to evaluate the motorized bicycle operator's qualification to operate a motorized bicycle.

N.J.A.C. 13:25-4.4 as amended provides that the Director shall appoint a Neurological Disorder Committee of three members to advise him or her as to issuing licenses to persons suffering from recurrent convulsive seizures, recurrent periods of impaired consciousness or from impairment or loss of motor coordination. The section as amended further provides that the Director shall appoint the Committee upon consultation with and advice of the Medical Society of the State of New Jersey. The amendment of N.J.A.C. 13:25-4.4 is consistent with a similar provision codified at N.J.A.C. 13:19-5.4.

N.J.A.C. 13:25-4.5 is amended to provide that when the Director deems it necessary to refer a specific case to the Committee, all available information concerning the licensed motorized bicycle operator or applicant, including the licensee's or applicant's statement of the case history and the treating physician's statement as to diagnosis, treatment and prognosis will be referred to the Committee for review, advice and recommendation.

N.J.A.C. 13:25-4.6 is amended to provide that each member of the Committee shall separately report his or her findings and recommendations to the Director.

The Division proposes to amend N.J.A.C. 13:25-4.7 to conform to existing Division procedures. As amended, the rule provides that notwithstanding N.J.A.C. 13:25-4.1, the Director, upon consultation with members of the Neurological Disorder Committee, may grant a motorized bicycle learner's permit or initial motorized bicycle license or permit a motorized bicycle operator to retain his or her motorized bicycle license although such person may have suffered a seizure, period of impaired consciousness, or from impairment or loss of motor coordination within a one year period from the date of the Director's determination when the specific characteristics of a person's disorder do not adversely impact on the person's ability to safely operate a motorized bicycle.

N.J.A.C. 13:25-4.8 as amended provides that when the Director has denied an applicant a motorized bicycle license or has suspended the license of a licensed motorized bicycle operator pursuant to N.J.A.C. 13:25-4, issuance or restoration may be considered providing the individual submits: a current statement of his or her case history; a current statement by the treating physician including diagnosis, treatment and prognosis; a current report covering the results of an electroencephalographic examination, if required; and satisfactory evidence that N.J.A.C. 13:25-4.1 or 13:25-4.7 have been complied with where applicable. N.J.A.C. 13:25-4.8(b) is deleted, since the subject matter which was dealt with in the subsection (driver reexaminations) is now treated by the Division in a proposed new rule, N.J.A.C. 13:25-4.10.

N.J.A.C. 13:25-4.9 as amended provides that as a condition precedent to the issuance, retention or restoration of motorized bicycle operating privileges pursuant to N.J.A.C. 13:25-4, the individual must agree in writing to submit to the Director periodic reports on forms approved by the Director. The reports shall contain a statement of the individual's case history and a statement by the treating physician. The rule as amended further provides that these reports shall be submitted every six months for a period of two years from the date that approval is given to hold a motorized bicycle license and that subsequent reports shall be submitted on a yearly basis.

The Division proposes a new rule at N.J.A.C. 13:25-4.10 pertaining to driver reexaminations. The proposed new rule provides that as a condition precedent to the issuance, retention or restoration of motorized bicycle operating privileges, the Director may require that a motorist be given a motorized bicycle driving test and examination at a Division of Motor Vehicles Driver Testing Center.

Subchapter 5 sets forth rules pertaining to the issuance and/or retention of motorized bicycle operating privileges with regard to persons who suffer or have suffered from cardiovascular disorders. This subchapter also contains provisions pertaining to the Division of Motor Vehicles' suspension and/or restoration of the motorized bicycle operating privileges of such persons.

The proposal significantly amends N.J.A.C. 13:25-5 and supplements it with new rules to bring it into conformity with existing Division procedures and the Division's cardiovascular disorder rules codified at N.J.A.C. 13:19-4 which pertain to motor vehicle licensees, permittees, and applicants. Since both N.J.A.C. 13:25-5 and 13:19-4 pertain to the same subject matter, namely, cardiovascular disorders, it is appropriate that N.J.A.C. 13:25-5 be amended so as to conform it to current Division practice regarding this subject as reflected in N.J.A.C. 13:19-4.

N.J.A.C. 13:25-5.1 is amended to provide that the Director, in consultation with the Medical Society of New Jersey, shall appoint a Cardiovascular Committee of specialists in cardiovascular disorders to guide him or her in making determinations as to whether persons are physically qualified to operate a motorized bicycle with safety.

N.J.A.C. 13:25-5.2 is amended to provide that where it appears to the Director that an applicant for a motorized bicycle license or licensed motorized bicycle operator suffers or has suffered from a cardiovascular condition, he or she may require from such person on forms furnished by the Director: a statement by the applicant or licensed driver of his or her case history; and a statement by a physician including all pertinent information relative to the applicant's or licensed driver's case including diagnosis, treatment and prognosis.

N.J.A.C. 13:25-5.3(a) as amended provides that when the Director deems it necessary to refer a specific case to the Committee, all available information including the applicant's or licensed motorized bicycle operator's statement of his or her case history and the attending physician's report will be referred to the Cardiovascular Committee for review and recommendation. Subsection (b) as amended provides that if in the opinion of the Committee it is advisable, the applicant or licensed driver may be required to be examined by a specialist in internal medicine or cardiology including x-ray and/or electrocardiogram. Subsection (c), which pertained to the payment of a fee by the applicant, is deleted because it does not conform to Division practice.

N.J.A.C. 13:25-5.4 as amended provides that the members of the Cardiovascular Committee will report their findings and recommendations to the Director and the Director will determine whether or not a person may be issued a motorized bicycle license.

The Division proposes to amend N.J.A.C. 13:25-5.5 to conform to existing Division procedures. As amended, the rule provides that when the Director has denied an applicant a motorized bicycle license pursuant to N.J.A.C. 13:25-5, restoration of the motorized bicycle operating privilege may be considered; provided, however, the period of time has expired which is determined by the Director, upon consultation with the Cardiovascular Committee, to be applicable in the case.

N.J.A.C. 13:25-5.6 is amended to provide that upon application for restoration, the case may be referred to the Cardiovascular Committee

You're viewing an archived copy from the New Jersey State Library.

as provided in N.J.A.C. 13:25-5.3. The amendment of N.J.A.C. 13:25-5.6 conforms the rule to existing Division practice and is consistent with a similar provision codified at N.J.A.C. 13:19-4.6.

Existing rule N.J.A.C. 13:25-5.7 is proposed for repeal, and a new rule proposed regarding the same subject matter, that is, interval reports. New rule N.J.A.C. 13:25-5.7 provides that as a condition precedent to the issuance, retention or restoration of motorized bicycle operating privileges pursuant to N.J.A.C. 13:25-5, the individual must agree in writing to submit to the Director periodic reports on forms approved by the Director. The reports shall contain a statement of the individual's case history. The rule as amended further provides that these reports shall be submitted every six months from the date that approval is given to hold a motorized bicycle license, and that the Director, in his or her discretion, may waive or change the time interval between submission of such reports.

The Division proposes a new rule at N.J.A.C. 13:25-5.8 pertaining to driver reexaminations. The proposed new rule provides that as a condition precedent to the issuance, retention or restoration of motorized bicycle operating privileges, the Director may require that a motorist be given a motorized bicycle driving test and examination at a Division of Motor Vehicles Driver Testing Center.

Subchapter 6 was repealed effective September 6, 1983. The subchapter contained rules concerning the point system. See N.J.A.C. 13:19-10 for current treatment of this subject.

Subchapter 7 pertains to serious motorized bicycle traffic offenses.

Subchapter 8 sets forth the procedure by which the operation of motorized bicycles on specific highways is regulated, as well as indicating certain specific highways on which the operation of motorized bicycles is either permitted or prohibited.

Subchapter 9 sets forth rules pertaining to protective helmets used by motorized bicycle operators. The proposal significantly amends N.J.A.C. 13:25-9 and supplements it with a new rule to bring it into conformity with existing Division practice regarding such helmets.

N.J.A.C. 13:25-9.1 is amended to provide that no person shall sell, offer for sale, or distribute any protective helmets for use by the operators of motorized bicycles unless they meet the helmet approval specifications set forth at N.J.A.C. 13:25-9.2 as amended. Subsection (b), which pertained to the submission to the Director of letters requesting approval of protective helmets, is deleted because it does not conform to Division practice.

Existing rule N.J.A.C. 13:25-9.2 is proposed for repeal and a new rule proposed regarding the same subject matter, that is, helmet approval specifications. New rule N.J.A.C. 13:25-9.2 provides that safety helmets shall meet the specifications established by the United States Department of Transportation as set forth in 49 CFR §571.218. The USDOT standard specifically pertains to motorcycle helmets, and the Division deems it appropriate that said provision also be applied to safety helmets worn by the operators of motorized bicycles since such operators are exposed to safety risks in the same manner as motorcycle operators.

N.J.A.C. 13:25-9.3 is amended to provide that each helmet worn by the operator of a motorized bicycle shall, in compliance with N.J.S.A. 39:3-76.7, have a reflectorized surface on both sides, or have securely affixed thereto reflectorized material on both the left and right side of the helmet. The rule as amended further provides that such reflectorization must cover an area of at least four square inches on each side of the helmet. If reflectorized safety tape is attached to each side of the helmet, it must be affixed in a permanent, weather-proof manner.

N.J.A.C. 13:25-9.4 is amended to provide that each approved helmet shall be labeled in accordance with 49 CFR §571.218. A former reference in the rule to a safety helmet approval application is deleted because it does not conform to Division practice.

N.J.A.C. 13:25-9.6 is repealed. The rule, which pertained to the issuance of a notice of approval by the Director for approved helmets, does not conform to existing Division practice and is therefore appropriate for repeal. The helmet approval standard is set forth in N.J.A.C. 13:25-9.2 as amended, thus rendering the issuance of a notice of approval unnecessary.

N.J.A.C. 13:25-9.7 is repealed. The rule, which pertained to the withdrawal of safety helmet approval by the Director, does not conform to Division practice and is therefore appropriate for repeal.

Social Impact

The readoption of N.J.A.C. 13:25 will have a beneficial social impact upon the public, since many of the rules proposed for readoption enhance highway safety. Applicants for motorized bicycle learner's permits are required to meet certain prerequisites before receiving a permit. Applicants for motorized bicycle licenses are likewise required to meet certain requirements before being issued a motorized bicycle license. Persons may be disqualified from operating a motorized bicycle because their medical condition poses an unreasonable risk to the safety of other motorists. The rules also set forth the procedure by which the operation of motorized bicycles on certain highways is regulated. The proposed amendments of N.J.A.C. 13:25 are beneficial to the public in that they conform the rules to existing Division procedures, thus providing accurate information to interested members of the public. The proposed readoption with amendments has no social impact upon the Division.

Economic Impact

There is an economic impact on the State of New Jersey in funding the Division of Motor Vehicles, which is responsible for the administration of the rules which are the subject of the proposed readoption. The economic impact on the State is partially defrayed by a statutory motorized bicycle learner's permit fee of $5.00 that must be paid by permit applicants. A fee of $2.00 for the photo on a motorized bicycle license must be paid by all initial license applicants and by renewal applicants under the age of 21. Motorized bicycle operators will incur an expense in connection with purchasing a protective helmet in compliance with N.J.S.A. 39:4-14.3q and these rules.

The proposed new rule at N.J.A.C. 13:25-3.16 has an economic impact upon those members of the public who apply for restoration of a motorized bicycle license or registration. The proposed new rule provides for the payment to the Division of a $50.00 license restoration fee by a suspended licensee, and further provides for the payment to the Division of a $50.00 registration restoration fee by a suspended registrant. These fees are imposed by the Division in conformity with N.J.S.A. 39:3-10a as amended by section 14 of P.L. 1994, c.60.

Executive Order No. 27 Analysis

N.J.A.C. 13:25-9.3, which provides that protective helmets used by the operators of motorized bicycles must have a reflectorized surface on both sides or have securely affixed thereto reflectorized material on both the left and right side of the helmet, sets forth a requirement which exceeds the standards for motorcycle helmets set forth in 49 CFR §571.218. The Federal motorcycle helmet standards have been made applicable to helmets used by motorized bicycle operators pursuant to N.J.A.C. 13:25-9.2 as amended, but the Federal standard does not contain the reflectorization requirement set forth in N.J.A.C. 13:25-9.3. However, N.J.A.C. 13:25-9.3 as amended also requires that protective helmets used by motorized bicycle operators be in compliance with N.J.S.A. 39:3-76.7, a New Jersey statute pertaining to motorcycle helmets which predates the enactment of the aformentioned Federal standard and which contains a reflectorization requirement. Although the New Jersey Legislature has amended N.J.S.A. 39:3-76.7 twice since the adoption of 49 CFR §571.218, it has chosen not to delete the reflectorization provision contained in the statute. Accordingly, the Division has retained the reflectorization requirement for protective helmets set forth in N.J.A.C. 13:25-9.3 because, although the cost to motorized bicycle operators to reflectorize a protective helmet is relatively modest (it may be accomplished by means of reflective tape), the use of reflectorization may prevent accidents by assisting other motorists in the identification of motorized bicycle operators during nighttime hours. The Division perceives no rational basis upon which to impose less stringent protective helmet standards on operators of motorized bicycles.

N.J.A.C. 13:25-9.2 and 9.4 each require compliance with the Federal Motorcycle Helmet Standards set forth in 49 CFR §571.218, but do not impose a standard which exceeds the Federal standards.

An Exeuctive Order No. 27(1994) analysis is not required for the remainder of the rules proposed for readoption and amendment as set forth in N.J.A.C. 13:25-1 through 8 because the subject matter of said rules is authorized under State law and is not subject to Federal requirements or standards.

Regulatory Flexibility Analysis

The rules proposed for readoption have been reviewed with regard to the Regulatory Flexibility Act, N.J.S.A. 52:14B-16 et seq. The proposed readoption of N.J.A.C. 13:25-9.2 as amended will impact small businesses which manufacture or supply protective helmets for use by the operators of motorized bicycles if such helmets fail to meet USDOT standards set forth in 49 CFR §571.218. The sale of protective helmets will be impacted if such helmets cannot be used by the operator of a motorized bicycle because they are in non-compliance with N.J.A.C. 13:25-9.2 as amended. However, it is anticipated that most affected small

You're viewing an archived copy from the New Jersey State Library.

businesses also manufacture or supply protective helmets which may be used by operators of motorized bicycles in lieu of the non-complying helmets. The interest of the public in terms of highway safety reflected by N.J.A.C. 13:25-9.2 as amended outweighs any negative impact on helmet sales which may affect certain small businesses. Accordingly, an exemption from the requirements of N.J.A.C. 13:25-9.2 as amended with regard to protective helmets manufactured or supplied by small businesses for motorized bicycle operators is not warranted.

Full text of the proposed readoption may be found in the New Jersey Administrative Code at N.J.A.C. 13:25, as amended in the New Jersey Register.

Full text of the proposed amendments follows (additions indicated in boldface **thus**; deletions indicated in brackets [thus]):

13:25-1.1 Definitions

The following words and terms, when used in this chapter, shall have the following meanings unless the context clearly indicates otherwise.

. . .

"Director" means the Director of the Division of Motor Vehicles in the Department of Law and Public Safety.

. . .

"Motorized bicycle driving test" means that portion of the motorized bicycle [operator] license examination wherein the applicant for a New Jersey motorized bicycle [operator] license demonstrates his or her ability to exercise safe and reasonable control in the operation of a motorized bicycle.

"Motorized bicycle [operator's] license" means a motorized bicycle license issued by the Director of the Division of Motor Vehicles, in accordance with the provisions of N.J.S.A. 39:4-14.3, to an individual who is 15 years of age or older and who does not have a New Jersey driver license of any class other than an agricultural license issued pursuant to N.J.S.A. 39:3-11.1.

"Permit" means a motorized bicycle learner's permit issued under the provisions of N.J.S.A. 39:4-14.3. Anyone operating a motorized bicycle under a permit for the purpose of fitting himself or herself to become a motorized bicycle [operator] **driver** shall limit said operation to daylight hours under any circumstances.

. . .

13:25-3.4 Motorized bicycle operating privilege status

(a) An individual may [not] **neither** apply for nor receive a motorized bicycle [operator] license during a period of suspension or revocation of any of his **or her** driving privileges.

(b) An individual may [not] **neither** apply for nor receive [a] **any class of** driver license during a period of suspension or revocation of his **or her** motorized bicycle operating privileges.

[(c) An individual in possession of a valid driver's license, during a period of suspension, shall also have his driver's license suspended or revoked for the period.]

13:25-3.6 Written test

(a)-(e) (No change.)

[(f) When an applicant fails the written test three times after having shown no improvement; the sergeant or officer-in-charge may request that the applicant be given an oral test.]

13:25-3.7 Oral test

(a) The oral test is a test given to applicants for a New Jersey motorized bicycle [operator's] license who are unable to read English or experience difficulty in understanding the English language so that they are unable to complete the written test [or to those applicants for whom an oral test request has been made pursuant to N.J.A.C. 13:25-3.6(f)].

(b) This test shall consist of two parts as follows[.]**:**

1. Slides [or]**,** transparencies **or other facsimiles** which can be used to show the image of official traffic **control** devices. The number of slides [and/or]**,** transparencies **and/or other facsimiles** shall not exceed 30. Applicants will be required to read and explain the meaning of each slide [and/or]**,** transparency **or other facsimile**. The percentage value of each slide [and/or], transparency **or other facsimile** shall be an equal percentage. A passing grade of 80 [per cent] **percent** must be attained by the applicant.

2. Questionnaires concerning the safe operation of a motorized bicycle, the New Jersey motor vehicle laws and regulations, as may be contained in the motorized bicycle operator's manual or any supplement thereto. The questions on these questionnaires will be asked orally of the applicants. The number of questions shall not exceed 30. [The questions will be read to the applicant.] A passing grade of 80 [per cent] **percent** must be attained by the applicant.

13:25-3.9 Visual acuity test standards

(a)-(d) (No change.)

(e) In the event any special device or equipment is used or needed to meet the minimum requirements [outlined in] **of** this section, the matter may be referred to the [office of the Chief of the Enforcement Bureau] **Director or his or her designee** for final determination.

13:25-3.10 Color perception check standards

(a) (No change.)

(b) An applicant may not be denied a motorized bicycle [operator's] license solely upon the basis of a color deficiency.

13:25-3.11 Necessity of motorized bicycle [operating] **driving** test

Every applicant for a New Jersey motorized bicycle [operator's] license must satisfactorily complete a practical demonstration of his **or her** ability to exercise ordinary and reasonable control in the operation of a motorized bicycle.

13:25-3.12 Motorized bicycle [operating] **driving** test maneuvers

(a) The motorized bicycle [operating] **driving** test may include, but is not limited to, the following maneuvers:

1.-6. (No change.)

(b) (No change.)

13:25-3.13 Motorized bicycle used in [operating] **driving** demonstration

The motorized bicycle used for the [operating] **driving** demonstration will be provided by the applicant who must have a valid **motorized bicycle** learner's permit in his **or her** possession.

13:25-3.14 Failure of motorized bicycle [operating] **driving** test

[(a)] An applicant who fails the motorized bicycle [operating] **driving** test may not be retested until a period of at least two weeks has elapsed.

13:25-3.15 Expiration of motorized bicycle [operator] license; [no-fee renewal] **photo license requirement; fee**

(a) Every motorized bicycle [operator] license shall expire on the last day of the 48th calendar month following the calendar month in which the license was issued.

(b) [All applications for renewals of licenses shall be made on forms prescribed by the director and shall be issued at no-fee.] **Photo licenses shall be mandatory for all initial motorized bicycle licensees and for motorized bicycle license renewals issued to applicants therefor who are under the age of 21.**

(c) The fee for issuance of a motorized bicycle license with a photo shall be $2.00.

(d) No fee shall be charged for issuance of a motorized bicycle license renewal without a photo.

13:25-3.16 [(Reserved)] **Restoration fees**

(a) A fee of $50.00 shall be payable to the Director for the restoration of any license which has been suspended or revoked by reason of the licensee's violation of any law or regulation.

(b) A fee of $50.00 shall be payable to the Director for the restoration of vehicle registrations which have been suspended or revoked by reason of the registrant's violation of any law.

13:25-3.19 Surrender of motorized bicycle [operator] license [upon issuance of driver's license]

An individual's motorized bicycle [operator's] license shall become null and void upon issuance to the individual of a valid **basic** driver's license **or motorcycle license** in the State of New Jersey. Said motorized bicycle [operator] license shall be surrendered **to the Division** at the time of such issuance.

You're viewing an archived copy from the New Jersey State Library.

SUBCHAPTER 4. CONVULSIVE SEIZURES

13:25-4.1 Satisfaction of physical qualifications

Any person who suffers or who has suffered from [epilepsy, convulsive disorders, convulsive seizures or blackouts,] **recurrent convulsive seizures, recurrent periods of impaired consciousness or from impairment or loss of motor coordination due to conditions such as, but not limited to, epilepsy, in any of its forms,** shall as a prerequisite to the issuance of a **motorized bicycle** learner's permit or motorized bicycle [operator's] license, **renewal of a motorized bicycle license or retention of a motorized bicycle license** establish to the satisfaction of the [director] **Director** that he **or she** has been [seizure] free **from recurrent convulsive seizures, recurrent periods of impaired consciousness or from impairment or loss of motor coordination** for a period of [two years] **one year** with or without medication and that he **or she** is physically qualified to operate a motorized bicycle.

13:25-4.2 Physically unqualified pending hearing

When it shall appear to the [director] **Director** that a licensed motorized bicycle operator or an applicant for a **motorized bicycle** learner's permit or motorized bicycle [operator's] license suffers or has suffered from [epilepsy, convulsive disorders, convulsive seizures or blackouts,] **recurrent convulsive seizures, recurrent periods of impaired consciousness or from impairment or loss of motor coordination** the [director] **Director** may, upon [appropriate] notice and **an** opportunity [for hearing] **to be heard**, suspend the motorized operating privilege of, or refuse to issue a motorized bicycle **learner's permit or a motorized bicycle** [operator's] license to such person as physically unqualified to operate a motorized bicycle with safety; provided, however, the [director] **Director** may, in the exercise of his **or her** discretion, suspend such motorized bicycle [operator's] license or refuse to issue such **motorized bicycle** learner's permit or motorized bicycle [operator's] license pending hearing, if it shall appear to the [director] **Director** to be in the interest of public safety that immediate action be taken.

13:25-4.3 History of seizures and physician's report

(a) When it shall appear to the [director] **Director**, upon information received or an investigation conducted, that a licensed motorized bicycle operator or an applicant for a **motorized bicycle** learner's permit or motorized bicycle [operator's] license suffers or has suffered from [epilepsy, convulsive disorders, convulsive seizures or blackouts,] **recurrent convulsive seizures, recurrent periods of impaired consciousness or from impairment or loss of motor coordination,** he **or she** may require from such person on forms approved by the [director] **Director**:

1. A statement by the applicant or licensee of his **or her** case history;

2. (No change.)

3. Any other information which the [director] **Director** may deem necessary to evaluate the motorized bicycle operator's qualification to operate a motorized bicycle.

13:25-4.4 [Medical-vision advisory panel] **Neurological Disorder Committee**

(a) The [director may request the medical-vision advisory panel] **Director shall appoint a Neurological Disorder Committee of three members** to advise him **or her** as to issuing licenses to persons suffering from [epilepsy, convulsive disorders and similar disabilities] **recurrent convulsive seizures, recurrent periods of impaired consciousness or from impairment or loss of motor coordination.**

(b) The Director shall appoint the Committee upon consultation with and advice of the Medical Society of the State of New Jersey.

13:25-4.5 [Medical-vision advisory panel] **Committee** review of case

[All] **When the Director deems it necessary to refer a specific case to the Committee, all** available information concerning the licensed motorized bicycle operator or applicant, including the licensee's or applicant's statement of the case history and the treating physician's statement as to diagnosis, treatment and prognosis will be referred to the [medical-vision advisory panel] **Committee** for review, advice and recommendation.

13:25-4.6 [Medical-vision advisory panel report] **Report** of findings

Each member of the [medical-vision advisory panel that was requested to advise the director] **Committee** shall separately report his **or her** findings and recommendations to the Director [of Motor Vehicles].

13:25-4.7 [Medical-vision advisory panel] **Committee** recommendations

Notwithstanding the provisions of [section 1 (Satisfaction of physical qualifications) of this subchapter, if the members of the medical-vision advisory panel so recommended] **N.J.A.C. 13:25-4.1**, the [director] **Director, upon consultation with the members of the Committee,** may grant a **motorized bicycle** learner's permit or initial motorized bicycle [operator] license or permit a motorized bicycle operator to retain his **or her** motorized bicycle [operator's] license although such person may have suffered [from] a seizure, **period of impaired consciousness, or from impairment or loss of motor coordination** within a [two-year] **one-year** period from the date of the [director's] **Director's** determination **when the specific characteristics or a person's disorder do not adversely impact on the person's ability to safely operate a motorized bicycle.**

13:25-4.8 Restoration qualifications

(a) When the [director] **Director** has denied an applicant a motorized bicycle [operator's] license or has suspended the license of a licensed motorized bicycle operator pursuant to this subchapter, issuance or restoration may be considered providing the individual submits:

1. A current statement of his **or her** case history;

2. (No change.)

3. A current report covering the results of an electroencephalographic examination, **if required**;

4. Satisfactory evidence that [sections 1 (Satisfaction) and 7 (Panel recommendation) of this subchapter] **N.J.A.C. 13:25-4.1 or 4.7** have been complied with where applicable.

[(b) The director may, in addition, require that a motorized bicycle operator be given a motorized bicycle operating test and examination at the division's driver improvement clinic.]

13:25-4.9 Interval report of seizures

(a) As a condition precedent to the issuance, **retention** or restoration of motorized bicycle operating privileges pursuant to this subchapter, the individual shall **agree in writing to** submit to the [director,] **Director periodic reports** on forms approved by the [director,] **Director. The reports shall contain** a statement of [his] **the individual's** case history and a statement by [a] **the** treating physician.

(b) These [statements] **reports** shall be submitted every six months for a period of two years from the date [of restoration] **that approval is given to hold a motorized bicycle license.**

(c) Subsequent [statements] **reports** shall be submitted on a yearly basis.

13:25-4.10 Driver reexamination

When necessary in the interest of public safety, and/or that of the operating individual, as a condition precedent to the issuance, retention or restoration of motorized bicycle operating privileges, the Director may require that a motorist be given a motorized bicycle driving test and examination at a Division of Motor Vehicles Driver Testing Center.

SUBCHAPTER 5. CARDIOVASCULAR DISORDERS

13:25-5.1 [Medical-vision advisory panel] **Cardiovascular Committee**

The [director may request the medical-vision advisory panel to advise him] **Director, in consultation with the Medical Society of New Jersey, shall appoint a Cardiovascular Committee of specialists in cardiovascular disorders** for the purpose of guiding him **or her** in making determinations as to whether persons are physically qualified to operate a motorized bicycle with safety.

13:25-5.2 Case history and physician's statement

(a) Where it shall appear to the [director] **Director** upon information or investigation that any applicant for a motorized bicycle

You're viewing an archived copy from the New Jersey State Library.

[operator's] license or licensed motorized bicycle operator suffers or has suffered from a cardiovascular condition, he **or she** may require from such person[s] on forms furnished by the [director] **Director**:

1. A statement by the applicant **or licensed driver** of his **or her** case history;

2. A statement by a physician including all pertinent information relative to the applicant's **or licensed driver's** case including diagnosis, treatment and prognosis.

13:25-5.3 [Medical-vision advisory panel review] **Review** and recommendation[s]

(a) [All] **When the Director deems it necessary to refer a specific case to the Committee, all** available information including the **applicant's or licensed** motorized bicycle operator's statement of his **or her** case history and the attending physician's report will be referred to the [medical-vision advisory panel] **Cardiovascular Committee** for review and recommendation.

(b) If in the opinion of the [panel] **Committee** it is advisable, the applicant **or licensed driver** may be required to be examined by a [member of the panel] **specialist in internal medicine or cardiology** including x-ray and/or electrocardiogram.

[(c) A reasonable fee will be established to be paid by the applicant.]

13:25-5.4 [Medical-vision advisory panel findings] **Findings** report

The members of the [medical-vision advisory panel] **Cardiovascular Committee** will report their findings and recommendations to the [director] **Director** and the [director] **Director** will determine whether or not a person may be issued a motorized bicycle [operator] license.

13:25-5.5 Consideration of restoration

When the [director] **Director** has denied an applicant a motorized bicycle license pursuant to this subchapter, restoration of the motorized bicycle operating privilege may be considered; provided, however, the period of time has expired which is determined by the [medical-vision advisory panel] **Director, upon consultation with the Cardiovascular Committee,** to be applicable in the case.

13:25-5.6 Case referral

Upon application for restoration, [provided the period of time as determined by the panel has expired since revocation or denial,] the case [will] **may** be referred to the [medical-vision advisory panel] **Cardiovascular Committee** as provided in [section 3 (Review and recommendations) of this subchapter] **N.J.A.C. 13:25-5.3**.

13:25-5.7 Interval reports

[When an applicant is permitted to secure a motorized bicycle operator license or his motorized bicycle operator license privilege is restored pursuant to this subchapter, as a condition of restoration or issuance of a license the applicant must submit to the director at six-month intervals a statement of his case history and a statement of a physician on forms furnished by the director.]

(a) As a condition precedent to the issuance, retention or restoration of motorized bicycle operating privileges pursuant to this subchapter, the individual shall agree in writing to submit to the Director periodic reports on forms approved by the Director. The reports shall contain a statement of the individual's case history and a statement by the treating physician.

(b) These reports shall be submitted every six months from the date that approval is given to hold a motorized bicycle license.

(c) When necessary in the interest of public safety, and/or that of the operating individual, the Director may, in his or her discretion, waive or change the interval report requirement of (b) above.

13:25-5.8 Driver reexamination

When necessary in the interest of public safety, and/or that of the operating individual, as a condition precedent to the issuance, retention or restoration of motorized bicycle operating privileges, the Director may require that a motorist be given a motorized bicycle driving test and examination at a Division of Motor Vehicles Driver Testing Center.

13:25-9.1 Approval of helmets

[(a)] [After April 1, 1983, no] **No** person shall sell, offer for sale, or distribute any protective helmets for use by the operators of motorized bicycles unless they [are of a type approved by the Director of the Division of Motor Vehicles] **meet the helmet approval specifications set forth at N.J.A.C. 13:25-9.2**.

[(b) Letters requesting approval of protective helmets shall be sent to the Director, Division of Motor Vehicles.]

13:25-9.2 Helmet approval specifications

[Applications for approval of safety helmets shall be accompanied by a copy of the Certificate of Approval from the American Association of Motor Vehicle Administrators, showing that the helmet meets the specifications of Standard Z90.1 (1966) of the USA Standards Institute, unless the AAMVA has sent a Confirmation Certificate of Approval directly to the New Jersey Division of Motor Vehicles.]

Safety helmets shall meet the specifications established by the United States Department of Transportation as set forth in 49 CFR §571.218.

13:25-9.3 Reflectorized surface on helmets

Each [approved] helmet **worn by the operator of a motorized bicycle** shall, **in compliance with N.J.S.A. 39:3-76.7,** have a reflectorized surface on both sides, or have securely affixed thereto reflectorized material on both the left and right side of the helmet. Such reflectorization must cover an area of at least four square inches on each side of the helmet. If reflectorized safety tape is attached to each side of the helmet, it must be affixed in a permanent, weather-proof manner.

13:25-9.4 Identification label on helmets

Each approved helmet shall be [permanently labelled with the manufacturer's trade name and number, which shall be the same trade name and number used in the approval application] **labeled in accordance with 49 CFR §571.218**.

13:25-9.6 [Notice of approval] **(Reserved)**

[When the Director determines that the conditions of approval have been met, a notice of approval will be issued.]

13:25-9.7 [Withdrawal of approval] **(Reserved)**

[The right is reserved to withdraw approval of a product at any time and for any cause deemed reasonable by the Director, or the Director may require new approvals at any time it is deemed necessary or reasonable.]

(a)

DIVISION OF STATE POLICE

Motor Vehicle Race Track Rules

Proposed Readoption with Amendments: N.J.A.C. 13:62

Proposed Repeals and New Rules: N.J.A.C. 13:62-4, 5, 6, 7, 10, 11, 13 and 14

Proposed New Rules: N.J.A.C. 13:62-6A, 6B, 12A, 12B, 15 and 16

Authorized By: Colonel Carl Williams, Superintendent, Division of State Police.

Authority: N.J.S.A. 5:7-8 et seq. and Attorney General's Executive Directive 1982-2.

Proposal Number: PRN 1995-67.

A **public hearing** on this proposal will be held on Friday, February 17, 1995 at 10:00 A.M. at:

HRDI Training Center
600 College Road East
Room 79
Princeton, New Jersey

You're viewing an archived copy from the New Jersey State Library.

Submit written comments by March 8, 1995 to:
Colonel Carl Williams, Superintendent
c/o Captain W. Yodice
Division of State Police
Traffic Bureau
River Road
P.O. Box 7068
West Trenton, New Jersey 08628-0068

The agency proposal follows:

Summary

N.J.A.C. 13:62 became effective March 19, 1990 for a period of five years, which expires on March 19, 1995. For the sake of clarity, the Division of State Police proposed that N.J.A.C. 13:22 be repealed and N.J.A.C. 13:62 be adopted on November 20, 1989 in order to incorporate changes in language, format and organization of material. N.J.S.A. 5:7-8 requires the regulation of the operation or conduct of motor vehicle races and exhibitions of motor vehicle driving and the tracks or places at which the same are operated and conducted, providing for the issuance of licenses. Pursuant to this statute and Attorney General's Executive Directive 1982-2, the Division of State Police is entrusted with the regulation of motor vehicle races and exhibitions of motor vehicle driving. The Division of State Police is proposing to amend certain rules and adopt new rules in accordance with the Division's statutory responsibility.

N.J.A.C. 13:62-1.1 sets forth the motor vehicle race track definitions. The proposed amendment would add the definitions of "junior dragster," "quarter midgets," "staging area," and "street legal car."

N.J.A.C. 13:62-2 sets forth the motor vehicle race track license requirements and license responsibilities. The proposed amendment would rename this subchapter to reflect "Motor Vehicle Race Track License Requirements and License Responsibilities: All Racing Events."

N.J.A.C. 13:62-2.1 sets forth the regulation for license application procedures. The proposed amendment would add to the regulation the clarification of an insurance certificate.

N.J.A.C. 13:62-2.7 sets forth the pit credentials for racing events. The proposed amendment would require the wearing of pants instead of shorts for mechanics, drivers and track officials. Also the proposed amendment would add that no one under the age of 18 would be permitted in the pit area, staging lanes or track surface. The proposed amendment would also set the age requirement of flagmen and starters at the age of 18 unless otherwise specified.

N.J.A.C. 13:62-2.17 sets forth the regulation requiring an ambulance and first aid attendant at a racing event. The proposed amendment would require a driver, who is involved in an accident in any racing event, to be checked by the on duty first aid attendant(s) before returning to the race event.

N.J.A.C. 13:62-3 sets forth construction requirements for race tracks. The proposed amendment would rename this subchapter to reflect "Safety Requirements for Vehicles and Personnel of Open Cockpit Vehicles."

N.J.A.C. 13:62-4 through 4.26 set forth the safety requirements for vehicles and personnel for open cockpit vehicles. The proposed amendment would rename this subchapter to reflect "Safety Requirements for Vehicles and Personnel for Oval Racing Vehicles."

N.J.A.C. 13:62-5 through 5.7 set forth the acceleration and performance tests regulations. The proposed amendment would rename this subchapter to reflect "Safety Requirements for Vehicles and Personnel: Drag Racing."

N.J.A.C. 13:62-6 through 6.8 set forth the motorcycle, motocross and quad vehicle regulations. The proposed amendment would rename the subchapter to reflect "Motorcycle and quad vehicle racing events (Oval racing)."

N.J.A.C. 13:62-7.1 through 7.6 set forth the requirements for the track construction on snowmobile events. The proposed amendments would set forth the safety requirements for vehicles and personnel for snowmobile racing events.

N.J.A.C. 13:62-8 sets forth the safety requirements at go-kart events. The proposed amendment clarifies the regulation concerning the use of helmets, the use of head cushions and goggles or face shields for go-cart racing events.

N.J.A.C. 13:62-9.2 through 9.6 set forth the rules on demolition derby participants. The proposed amendment would set forth the safety requirements for vehicles and personnel for demolition derby and tractor pull events.

N.J.A.C. 13:62-10 through 10.16 set forth the regulation for enduro events. The proposed amendment would rename this subchapter to read "Automobile Enduro Events." Also the proposed amendment would set forth the safety requirements for vehicles and personnel for automobile enduro events.

N.J.A.C. 13:62-11.1 through 11.16 set forth the construction requirements at mud hop events. The proposed amendment would set forth the safety requirements for vehicles and personnel for mud hop events.

N.J.A.C. 13:62-13 currently sets forth the special age provision and participant requirements. These are now set forth in proposed N.J.A.C. 13:62-14. Proposed new N.J.A.C. 13:62-13 describes the duties and functions of the advisory committee.

N.J.A.C. 13:62-14 currently sets forth the requirements for appeals of administrative action. These are now proposed at N.J.A.C. 13:62-16.

Proposed new rules N.J.A.C. 13:62-3.7 through 3.33 sets forth the safety requirements for vehicles and personnel at open cockpit events.

Proposed new rules N.J.A.C. 13:62-4.27 through 13:62-4.33 set forth the safety requirements for vehicles and personnel at oval racing events.

Proposed new rules N.J.A.C. 13:62-5.8 through 5.42 set forth the safety requirements for vehicles and personnel at drag racing events.

Proposed new rules N.J.A.C. 13:62-6.9 through 6.17 sets forth the regulation for the safety requirements for vehicles and personnel at motorcycle and quad vehicle oval racing events.

Proposed new rules N.J.A.C. 13:62-6A.1 through 6A.12 set forth the safety requirements for vehicles and personnel at motocross and quad vehicle racing events on a serpentine racing course.

Proposed new rules N.J.A.C. 13:62-6B.1 through 6B.11 sets forth the safety requirements for vehicles and personnel at motocross enduro racing events.

Proposed new rules N.J.A.C. 13:62-7.7 through 7.14 set forth the safety requirements of vehicles and personnel at snowmobile racing events.

Proposed new rules N.J.A.C. 13:62-8.5 through 8.7 set forth the safety requirements of vehicles and personnel at go-kart racing events.

Proposed new rules N.J.A.C. 13:62-9.7 through 9.10 set forth the safety requirements of vehicles and personnel at tractor pull racing events.

Proposed new rules N.J.A.C. 13:62-10.17 through 10.23 set forth the safety requirements of vehicles and personnel at automobile enduro events.

Proposed new rules N.J.A.C. 13:62-11.17 through 11.23 set forth the safety requirements of vehicles and personnel at mud hop events.

Proposed new rules N.J.A.C. 13:62-12A.1 through 12A.4 set forth the safety requirements of vehicles and personnel at quarter midget racing events.

Proposed new rules N.J.A.C. 13:62-12B.1 through 12B.9 set forth the safety requirements of vehicles and personnel at junior drag racing events.

Proposed new rules N.J.A.C. 13:62-15 set forth the actions for regulation violation(s).

Social Impact

The rules proposed for readoption and the proposed amendments are designed to maximize the safety of participants and spectators at motor vehicle racing events. Construction requirements for race tracks and courses permit participants to engage in racing in a relatively safe environment, while at the same time allowing the public to view not only the races but also the pit areas to the maximum extent reasonable to ensure the safety of all concerned. Requirements for fuel tank placement, battery location, and safety equipment ensure participant and public safety by limiting the potential for fire or explosion in the event of a crash. Requirements for fire resistant clothing for participants, helmet, face shields, and safety harnesses are designed to minimize personal injury in the event of a crash. The rules proposed for readoption have been expanded to provide subchapters on each type of racing with a complete set of requirements, so that track licensees and participants have a clear understanding of the rules applicable to their type of race without having to refer to different subchapters for different rules. For that reason, the chapter is considerably larger than in the past, but the substantive changes are minimal. This approach will make compliance easier and avoid unnecessary disruption of racing events. The rules proposed for readoption have had a positive social impact in that racing events have been conducted safely and efficiently. Readoption of these rules is necessary to ensure the continued safety of spectators and participants in motor vehicle races.

You're viewing an archived copy from the New Jersey State Library.

Economic Impact

The rules proposed for readoption and the proposed new rules will have some economic impact on licensees and participants. Increased costs may be passed on to the public in the form of higher admission prices. Costs incurred by licensees may also be passed on to participants in the form of increased entry fees. Licensees are required to pay the statutory license fee. Licensees may incur costs for construction of new or altered racing facilities, some of which could be attributable to compliance with these rules. The amount of such cost is not calculable becuase it depends on the type of track and racing conducted, the size of the facility, and the extent of alteration. In general, licensed facilities and participants already in compliance with requirements of organizations sponsoring racing events will not incur any additional costs for compliance with these rules. Participants may incur some cost in altering vehicles to comply with fuel cell and battery placement requirements, or braided fuel line requirements. The cost of compliance depends on the type of vehicle, which range from go-carts to professional dragsters and "Indy" cars.

Regulatory Flexibility Analysis

The Division estimates that approximately 33 track operators subject to these regulations may qualify as small businesses under the Regulatory Flexibility Act, N.J.S.A. 52:14B-16 et seq. Besides the license application process, a licensee is required to submit plans and specifications for quad vehicle and motocross racing courses. The licensing application requirements are set forth in subchapter 2. Licensees are required to file monthly reports on forms provided by the Division to indicate the number and type of events conducted, the number of participants and spectators, and any accidents or unusual events. These requirements are uniformly applied to all licensees to ensure participant and spectator safety and no allowance for small businesses is possible. Small businesses may incur costs for professional services (engineers, architects, accountants). The amount of such costs cannot be calculated, because they depend on the size of the facility, the number and size of racing events, and reason for the expense, such as repairs caused by vehicle crashes.

No recordkeeping or reporting requirements are imposed on participants, some of whom may be small businesses. These small businesses may, however, incur costs in complying with vehicle or participant safety equipment requirements. These costs vary according to the type of vehicle and degree of noncompliance.

Full text of the proposed readoption may be found in the New Jersey Administrative Code at N.J.A.C. 13:62.

Full text of the proposed repeals may be found in the New Jersey Administrative Code at N.J.A.C. 13:62-4, 5, 6, 7, 10, 11, 13 and 14.

Full text of the proposed amendments and new rules follows (additions indicated in boldface **thus**; deletions indicated in brackets [thus]):

13:62-1.1 Words and phrases defined

The following words and terms, when used in this chapter, shall have the following meanings unless the context clearly indicates otherwise.

. . .

"Junior dragster" means a competition vehicle that is scaled down to half the size and is a near replica of a professional dragster utilizing a lawn mower engine. The competitor will utilize ⅛ of the track surface and driven by children between the ages of 8-17.

. . .

"Quarter midgets" means a competition vehicle scaled down to one-fourth the size of midget racers powered by a lawn mower engine and driven by children ages 5-16.

. . .

"Staging area" means that portion of a racing location where vehicles are lined up in preparation for entering the acceleration and performance test area.

"Street legal car" means a car intended for the use on public roadways and highways of this State and able to pass all of the requirements for motor vehicle inspection as described under Title 39 of the New Jersey Motor Vehicle and Traffic Laws.

. . .

SUBCHAPTER 2. MOTOR VEHICLE RACE TRACK LICENSE REQUIREMENTS AND LICENSEE RESPONSIBILITIES: **(ALL RACING EVENTS)**

13:62-2.1 License application procedure

(a) A license shall be required for any operation or conduct of motor vehicle races and exhibitions of motor vehicle driving and the tracks or places at which the same are operated and conducted. The application for a motor vehicle race track license must be submitted at least 90 days prior to the first day of racing or exhibition. An application for renewal of a license shall be submitted within 60 days of the expiration date of the license and is to be accompanied by:

1. An insurance certificate;

i. N.J.S.A. 5:7-13 states that no license shall be issued for the holding of any motor vehicle race or exhibition of motor vehicle driving skill until the person applying for the license shall have filed with the Department evidence satisfactory to it of the issuance of an insurance policy approved by the department and conditioned, in the case of a race or exhibition at a track or other place accommodating less than one thousand people, for the payment of less than $25,000 to any one person obtaining judgment, and not less than $50,000 on all judgments recovered, and for the payment of not less than $50,000 to any one person obtaining judgment, and not less than $100,000 on all judgments recovered, in the case of all other races or exhibitions, upon a claim or claims arising out of the same transaction, connected with the same subject of action (to be apportioned ratably among judgment creditors according to the amount of their respective judgments) for damages because of bodily injury, including death at any time resulting therefrom, caused to any person or persons, other than the driver, and all pit area personnel as the result of an accident occurring as a result of the conduct of any motor vehicle race or exhibition of motor vehicle driving skill, for which the license is granted, under which policy the liability of the company shall become absolute when loss or damage covered by the policy occurs, and satisfaction by the insured of a final judgment for the loss or damage shall not be a condition precedent to the right or duty of said company to make payment on account of the loss or damage and which policy shall not be cancelable or annulled as to any loss or damage by an agreement between the carrier and the insured after the insured has become responsible for the loss or damage or in any other event, except on 10 days prior notice to the Department;

2.-5. (No change.)

13:62-2.7 Pit credentials

(a)-(f) (No change.)

(g) No one under the age of 18 is to be permitted in the pit area, staging lanes or track surface.

(h) Flagmen and starters at all racing events shall be at least 18 years of age.

(i) Mechanics must wear pants while working on their respective vehicles.

(j) Drivers are not permitted to wear shorts while competing.

(k) Track staff will wear pants, at all times, while working in a race event.

13:62-2.17 Ambulances; first aid attendant

(a) The licensee shall not permit any race or exhibition of driving skill unless there is available for immediate use at the licensed location at least one vehicle suitable for ambulance purposes, together with [one] **two** trained first aid attendants.

(b) The licensee shall ensure that a driver of any racing event involved in an accident which results in considerable damage to the vehicle or any noticeable injury to the driver is checked by the first aid attendant(s) on duty and cleared to participate before he/she returns to the racing event.

1. If the driver refuses medical attention, he or she must sign a waiver stating so.

2. The licensee shall not allow the driver to re-enter the race event if the driver refuses to sign the medical waiver or medical attention is recommended.

You're viewing an archived copy from the New Jersey State Library.

SUBCHAPTER 3. CONSTRUCTION REQUIREMENTS

13:62-3.7 Safety belts, shoulder harness and crotch belt

(a) A quick release type safety belt, shoulder harness and crotch belt in good condition shall be compulsory on all vehicles.

(b) Both ends of the safety belt, shoulder harness and crotch belt shall be fastened to the frame of the vehicle.

(c) All fittings and connections of the safety belt, shoulder harness and crotch belt shall be metal.

(d) All safety belts and shoulder harnesses shall be worn properly the entire time the vehicle is being driven in a race.

(e) All safety belts and shoulder harnesses shall bear the date of manufacture and shall be used for more than five years from the date.

(f) The shoulder harness shall be secured to the frame of the vehicle and come over a round bar at the driver's shoulder height.

(g) No alterations shall be allowed to any manufactured design of seat belts.

13:62-3.8 Inspection of vehicles

(a) The licensee shall arrange for the inspection of each participating vehicle prior to the event, to determine that it meets the requirements of this chapter. The licensee shall prohibit vehicles not meeting the requirements of this chapter from participation or practice.

(b) Vehicles which are to be used in automobile races or exhibitions of driving skill are subject to unannounced inspection and approval at any time by the Superintendent or designee.

13:62-3.9 Number of persons in vehicle

No vehicle shall carry more than one person at any time during a race or warm-up, except that during a bona fide training period an instructor may accompany the trainee.

13:62-3.10 Seats

(a) A molded metal or fiberglass seat with openings which allow a seat belt bolted to the frame to come through shall be attached to the frame with at least four three line 5/16 inch bolts. Two bolts shall be installed at the bottom of the seat not more than three inches from the outside edge and two bolts shall be installed at the two most practical widely spaced points at the top of the seat back. A metal strap at least two inches in width and at least ⅛ inch thick shall connect each set of bolts.

(b) Vehicles equipped with a metal seat are not required to have a metal strap connected to each set of bolts. These vehicles are required to have a larger washer on each bolt.

13:62-3.11 Bumpers

(a) All vehicles shall be equipped with bumpers on the rear.

(b) The bumper shall be fastened to the frame or structural component of the car.

(c) The height of the bumper shall be as high as the center of the wheel and at least two inches in height.

13:62-3.12 Rollover bars

(a) All vehicles shall be equipped with a rollover bar of a design, construction and quality recognized by industry standard and maintained with a view toward affording the driver maximum protection against injury.

(b) Rollover bars must be a minimum of three inches above the driver's head.

(c) Rollover bars must be bolted or welded to the frame of the vehicle.

13:62-3.13 Nerfing bars

(a) All vehicles shall be equipped with auxiliary bumpers, also known as nerfing bars, of a construction and design to afford the driver maximum protection against injury.

(b) Nerfing bars shall extend within two inches of, but not beyond, the outside edge of the tire.

13:62-3.14 Exhaust system

(a) The outlet for the exhaust system shall be outside of the vehicle and extend at least to the rear of the front of the firewall.

(b) The exhaust system shall be designed and constructed so as to direct the exhaust flow out and away from the driver.

13:62-3.15 Fire wall and flooring

(a) All vehicles shall have suitable metal flooring from the front firewall to the center of the driver's seat.

(b) All vehicles shall have a permanent fire wall between the fuel supply and the driver, unless the fuel tank consists of a shell with an inner rubber bladder in which case the fire wall is not required.

13:62-3.16 Fuel lines and fuel pumps

(a) A fuel line or fuel pump is prohibited in the driver's compartment unless shielded properly to prevent leakage in the event the line or pump is damaged or broken.

1. This shielding shall consist of steel braided material.

(b) Fuel lines shall be more than three inches from the headers unless shielded by metal.

13:62-3.17 Fuel tanks

(a) Except as set forth in (b) below, vehicles using a self-contained fuel cell with an inner rubber bladder shall bolt the self-contained fuel cell to the frame of the vehicle utilizing an "x" type frame work under the cell. At least three one inch metal straps quarter inch thick bolted to the frame of the vehicle by at least two ⅜ inch three line bolts and angled so that it goes around the cell, except for the bottom, so as to apply maximum pressure against the tank to the frame.

(b) Units not bolted to the frame shall have four one inch metal straps, ¼ inch thick, bolted to the frame of the vehicle by at least two ⅜ inch three line bolts and angled to go entirely around the cell to apply maximum pressure against the tank to the frame.

(c) A conventional type tank shall be bolted within the frame of the vehicle.

(d) A reinforcing member of the same kind and size material as that used in the roll cage of the chassis shall be installed to the rear of the fuel tank joining the rearmost portion of the chassis.

(e) A vehicle utilizing a fuel tank mounted to the front of the front fire wall shall have a reinforcing member of the same kind of material as that used in the roll cage or chassis, installed to afford maximum protection to the tank.

(f) All open cockpit vehicles shall be equipped with a fuel cell bladder.

13:62-3.18 Fuel supply shutoff valve

(a) All vehicles shall be equipped with a fuel shutoff valve or switch which is easily accessible to the driver.

(b) The fuel shutoff valve or switch shall be conspicuously marked with a brightly colored paint.

13:62-3.19 Refueling

(a) In all instances where refueling is permitted with the engine running, a member of the pit crew, equipped with a 10 BC or greater fire extinguisher, shall be in close proximity to the fill pipe of the fuel tank.

(b) Smoking shall not be permitted in any area where fuel is being transferred or stored.

(c) The driver compartment shall not be occupied when the vehicle is being refueled if the fill pipe is located within 24 inches of the cockpit, except that the driver compartment may be occupied when the vehicle is being refueled from gravity fed fuel containers.

(d) The use of welding and acetylene torches is not permitted in any area where fuel is being transferred or stored unless a fully charged fire extinguisher is in close proximity.

13:62-3.20 Batteries

(a) Batteries, located in the driver compartment, shall be secured and shielded to prevent leakage in the event of damage or turnover.

(b) Batteries located adjacent to the fuel supply of the vehicle must be secured in a metal box bolted to the frame of the vehicle by at least four ⅜ inch three line bolts to apply maximum pressure against the metal box to the frame. The battery shall also have a marine box cover secured to the top of the metal box as to not allow any movement of the battery.

You're viewing an archived copy from the New Jersey State Library.

(c) Batteries located in any other area not specified in (a) and (b) above shall be secured and shielded to prevent leakage in the event of damage or turnover.

13:62-3.21 Braking system and pedal reserve

(a) The licensee or designee shall test and approve each race car for break pedal reserve before the car leaves the pit area to enter the track.

(b) The licensee or designee shall prohibit any vehicle from participating in any event or exhibition if the braking system includes the direct application of pressure to any of the tires or with apparent deficiencies.

13:62-3.22 Tires

(a) No vehicle shall be permitted to participate in any race if the tires are equipped or fitted with any studs, hobs, or other projections.

(b) This section is not intended to prohibit the use of rubber knobbed tires normally used on dirt race tracks.

(c) No vehicle shall be permitted to participate in any race if the tires are in an unsafe condition.

13:62-3.23 Ignition switch

All vehicles shall have an ignition switch which is easily accessible within the driver compartment and conspicuously marked.

13:62-3.24 Repairs

No repairs shall be made on any vehicle during the course of a race unless the vehicle is removed to the pit area.

13:62-3.25 Drivers

(a) All drivers shall be at least 18 years of age.

(b) All drivers are required to wear fire resistant underwear and one piece fire resistant clothing covering their body, legs, and arms.

(c) All drivers are required to wear fire resistant gloves.

(d) All drivers are required to wear fire resistant shoes and it is recommended that fire resistant socks be worn.

13:62-3.26 Helmets and head cushions

(a) All drivers shall wear a helmet in condition which meets or exceeds the American National Standard Institute (A.N.S.I.) Z-90.1 testing standard.

(b) All vehicles shall be equipped with a head cushion attached to the roll-on bar or to the back portion of a one-piece seat. The cushion shall be mounted so that it shall be at the approximate height of the center of the driver's helmet.

(c) The head cushion shall be a minimum of 16 square inches in area with at least two inch padding. The minimum length of any side of the head cushion shall be four inches.

(d) A support cushion shall be located behind the rear portion of the seat, attached to the roll cage and at least one eighth of an inch thick.

13:62-3.27 Goggles or face shield

The driver of all vehicles not equipped with windshields shall wear windproof, shatterproof goggles or a face shield of the type which meets or exceeds U.S.A. standard Specifications for Head, Eye and Respiratory Protection Z2.1-1959 testing standard.

13:62-3.28 Arm restraints; window nets

All drivers shall use arm restraints or window nets.

13:62-3.29 Transmission safety mats

(a) Any vehicle equipped with an automatic transmission shall have a steel mat, plate, or blanket installed over the transmission to protect the driver from injury caused by fragmentation of the automatic transmission upon explosion.

(b) All cooling devices within the driver's compartment shall be shielded from the driver to protect against injuries.

13:62-3.30 Enclosed drive shaft

The drive shaft of a vehicle shall be enclosed or secure, front and rear, by a steel strap ¼ inch thick by one inch wide, a ½ inch steel rod, or one inch steel tubing with .06 wall thickness.

13:62-3.31 Water overflow tank

Water overflow reservoirs shall not be installed inside the driver compartment. Tanks or reservoirs mounted in the roll cage must be fully shielded to protect the driver.

13:62-3.32 Speed limits

(a) All vehicles traveling in the pit area or staging area must obey a five miles per hour speed limit.

(b) Vehicles utilizing a return road will be limited to a 15 miles per hour speed limit.

13:62-3.33 Licensed facilities

Open cockpit racing events shall only take place in licensed facilities.

SUBCHAPTER 4. SAFETY REQUIREMENTS FOR VEHICLES AND PERSONNEL: [OPEN COCKPIT] OVAL RACING

13:62-4.1 Construction requirements

(a) Hubrail construction shall comply in all respects with the requirements of this chapter.

(b) The licensee shall provide and maintain hubrails on the outer circumference of the track and around the entire circumference thereof. Where spectators are allowed in the infield or within the inner circumference of the track, the licensee shall provide and ensure a hubrail, as described in this section, around the inner circumference of the track.

(c) The hubrail shall consist of at least two planks of hard wood or other suitable materials, at least 10 inches in width by three inches in thickness.

(d) The hubrail shall be supported by posts of similar material of at least six inches in width and six inches in thickness or round posts not less than seven inches in diameter, which are set in the ground at least four feet and shall extend above the ground at least two feet. The post shall be no higher than the hubrail planking and shall be spaced no more than six feet apart.

(e) Two planks of hardwood or other suitable material shall be mounted on the side of the post facing the track and running horizontally and parallel to each other.

(f) On the opposite side of the posts, not more than eight inches from the top thereof, there shall be a ¾ inch steel cable running around the circumference of the track and securely fastened to the post with eye bolts.

(g) The hubrail entrance and exit gates to the pit area shall be closed while vehicles are in motion on the track, unless alternate arrangements have been made by the installation of barriers of a type which will prevent cars out of control from leaving the track and entering the immediate pit working area.

(h) Where the licensee wishes to use methods other than gates, an inspection of such installations by a representative of the Superintendent is required.

(i) The hubrail opening for vehicles shall be so located that a vehicle leaving the track must turn 90 degrees before entering the pit area.

(j) At locations using methods other than gates between the pit area and the track, the licensee shall provide a guard to prevent unauthorized persons from entering the track area.

(k) The use of baled hay or straw or any similar material as a protective device between participating vehicles and spectators is specifically prohibited.

13:62-4.2 Fences

All fences installed for the purpose of limiting spectator areas shall be constructed of welded wire fabric or chain link and shall be at least six feet in height and so constructed as not to be easily lifted, climbed over or moved aside, except at motocross events the fence shall be of the same construction but at least five feet in height.

13:62-4.3 Red and amber lights

(a) Each track used for automotive racing, except those used for acceleration and performance tests, shall be equipped with a system

You're viewing an archived copy from the New Jersey State Library.

of at least four red lights and four amber lights so arranged that at least one light of each color will be visible to the drivers as they enter each turn.

(b) The lights shall be so arranged as to be controlled by a single switch. The licensee shall provide a responsible person to operate such switch during the entire time of each race.

(c) When the red lights are illuminated, all racing vehicles on the track shall stop as soon as possible and remain stopped until such time as the red lights are turned out.

(d) When the amber lights are illuminated, all racing vehicles on the track shall slow down and maintain their position, unless otherwise directed to change position by a track official.

13:62-4.4 Flagmen

(a) Tracks over one mile in length may use flagmen in lieu of the red and amber lights, provided the assistant flagman in the starter's stand is in constant two-way radio or telephone communication with all flagmen.

(b) On display of the red flag all racing vehicles shall stop as soon as possible and remain stopped until such time as the red flag is removed from display.

(c) On display of the amber flag all racing vehicles shall slow down and maintain their position, unless otherwise directed to change position by a track official.

13:62-4.5 Starters

(a) The licensee shall provide a starter(s) located within a starter's stand with an unobscured view of the entire racing surface from which to control the racing event.

(b) The licensee shall provide an assistant flagman in the starter's stand at all circular or oval tracks, road courses and other locations utilizing the services of flagmen to control the event. The assistant flagmen used to control or start a race shall be in the starter's stand when starting and during the race.

13:62-4.6 Maximum protection

(a) All hubrails, fences, stands and buildings must be constructed and maintained so as to afford maximum protection for spectators.

(b) Any spectator stand erected or relocated on or after April 1, 1960, must be located at least 25 feet from the hubrail.

13:62-4.7 Safety belts, shoulder harness and crotch belt

(a) A quick release type safety belt, shoulder harness and crotch belt in good condition shall be compulsory on all vehicles.

(b) Both ends of the safety belt, shoulder harness and crotch belt must be fastened to the frame of the vehicle.

(c) All fittings and connections of the safety belt, shoulder harness and crotch belt shall be metal.

(d) All safety belts and shoulder harnesses shall be worn properly the entire time the vehicle is being driven in a race.

(e) All safety belts and shoulder harnesses shall bear the date of manufacture and shall not be used for more than five years from the date.

(f) The shoulder harness shall be secured to the frame of the vehicle and come over a round bar at the driver's shoulder height.

(g) No alterations shall be allowed to any manufactured design of seat belts.

13:62-4.8 Inspection of vehicles

(a) The licensee shall arrange for the inspection of each participating vehicle prior to the event, to determine that it meets the requirements of this chapter. The licensee shall prohibit vehicles not meeting the requirements of this chapter from participation or practice.

(b) Vehicles which are to be used in automobile races or exhibitions of driving skill are subject to unannounced inspection and approval at any time by the Superintendent or designee.

13:62-4.9 Number of persons in vehicle

No vehicle shall carry more than one person at any time during a race or warm-up, except that during a bona fide training period an instructor may accompany the trainee.

13:62-4.10 Seats

(a) A molded metal or fiberglass seat with openings which allow a seat belt bolted to the frame to come through, shall be attached to the frame with at least four three line 5/16 inch bolts. Two bolts shall be installed at the bottom of the seat not more than three inches from the outside edge and two bolts shall be installed at the two most practical widely spaced points at the top of the seat back. A metal strap at least two inches in width and at least 1/8 inch thick shall connect each set of bolts.

(b) Vehicles equipped with a metal seat are not required to have a metal strap connected to each set of bolts. These vehicles are required to have a larger washer on each bolt.

(c) Factory installed seats may be utilized provided it is equipped with a head rest.

13:62-4.11 Bumpers

(a) All vehicles shall be equipped with bumpers on the rear.

(b) The bumper shall be fastened to the frame or structural component of the car.

(c) The height of the bumper shall be as high as the center of the wheel and at least two inches in height.

13:62-4.12 Rollover bars

(a) All vehicles shall be equipped with a rollover bar of a design, construction and quality recognized by industry standard and maintained with a view toward affording the driver maximum protection against injury.

(b) Rollover bars shall be a minimum of three inches above the driver's head.

(c) Rollover bars shall be bolted or welded to the frame of the vehicle.

13:62-4.13 Nerfing bars

(a) All vehicles shall be equipped with auxiliary bumpers, also known as nerfing bars, of a construction and design to afford the driver maximum protection against injury.

(b) Nerfing bars shall extend within two inches of, but not beyond, the outside edge of the tire.

13:62-4.14 Exhaust system

(a) The outlet for the exhaust system shall be outside of the vehicle and extend at least to the rear of the front firewall.

(b) The exhaust system shall be designed and constructed so as to direct the exhaust flow out and away from the driver.

13:62-4.15 Fire wall and flooring

(a) All vehicles shall have suitable metal flooring from the front firewall to the center of the driver's seat.

(b) All vehicles shall have a permanent fire wall between the fuel supply and the driver, unless the fuel tank consists of a shell with an inner rubber bladder in which case the fire wall is not required.

13:62-4.16 Fuel lines and fuel pumps

(a) A fuel line or fuel pump is prohibited in the driver's compartment unless properly shielded to prevent leakage in the event the line or pump is damaged or broken. This shielding shall consist of the steel braided material.

(b) Fuel lines shall be more than three inches from the headers, unless shielded by metal.

13:62-4.17 Fuel tanks

(a) Except as set forth in (b) below, vehicles using a self-contained fuel cell with an inner rubber bladder shall bolt the self-contained fuel cell to the frame of the vehicle utilizing an "x" type frame work under the cell. At least three one inch metal straps quarter inch thick bolted to the frame of the vehicle by at least two 3/8 inch three line bolts and angled so that it goes around the cell, except for the bottom, so as to apply maximum pressure against the tank to the frame.

(b) Units not utilizing a "x" type frame shall have four one inch metal straps, 1/4 inch thick, bolted to the frame of the vehicle by at least two 3/8 inch three line bolts and angled to go entirely around the cell to apply maximum pressure against the tank to the frame.

You're viewing an archived copy from the New Jersey State Library.

(c) All vehicles shall be equipped with a fuel cell bladder.

(d) A reinforcing member of the same kind and size material as that used in the roll cage of the chassis shall be installed to the rear of the fuel tank joining the rearmost portion of the chassis.

(e) A vehicle utilizing a fuel tank mounted to the front of the front fire wall shall have a reinforcing member of the same kind of material as that used in the roll cage or chassis installed to afford maximum protection to the tank.

13:62-4.18 Fuel supply shutoff valve

(a) All vehicles shall be equipped with a fuel shutoff valve or switch which is easily accessible to the driver.

(b) The fuel shutoff valve or switch shall be conspicuously marked with a brightly colored paint.

13:62-4.19 Refueling

(a) In all instances where refueling is permitted with the engine running, a member of the pit crew, equipped with a 10 BC or greater fire extinguisher, shall be in close proximity to the fill pipe of the fuel tank.

(b) Smoking shall be prohibited in any area where fuel is being transferred or stored.

(c) The driver compartment shall not be occupied when the vehicle is being refueled if the fill pipe is located within 24 inches of the cockpit, except that the driver compartment may be occupied when the vehicle is being refueled from gravity fed fuel containers.

(d) The use of welding and acetylene torches is not permitted in any area where fuel is being transferred or stored unless a fully charged fire extinguisher is in close proximity.

13:62-4.20 Batteries

(a) Batteries, located in the driver compartment, shall be secured and shielded to prevent leakage in the event of damage or turnover.

(b) Batteries located adjacent to the fuel supply of the vehicle it shall be secured in a metal box bolted to the frame of the vehicle by at least four ⅜ inch three line bolts and in such a manner to apply maximum pressure against the metal box to the frame. The battery shall also have a marine box cover secured to the top of the metal box as to not allow any movement of the battery.

(c) Batteries located in any other area not specified in (a) and (b) above shall be secured and shielded to prevent leakage in the event of damage or turnover.

13:62-4.21 Braking system and pedal reserve

(a) The licensee or designee shall test and approve each race car for brake pedal reserve before the car leaves the pit area to enter the track.

(b) The licensee or designee shall prohibit any vehicle from participating in any event or exhibition if the braking system includes the direct application of pressure to any of the tires or with apparent deficiencies.

13:62-4.22 Tires

(a) No vehicle shall be permitted to participate in any race if the tires are equipped or fitted with any studs, hobs, or other projections.

(b) This section is not intended to prohibit the use of rubber knobbed tires normally used on dirt race tracks.

(c) No vehicle shall be permitted to participate in any race if the tires are in an unsafe condition.

13:62-4.23 Ignition switch

All vehicles shall have an ignition switch which is easily accessible within the driver compartment and conspicuously marked.

13:62-4.24 Repairs

No repairs shall be made on any vehicle during the course of a race unless the vehicle is removed to the pit area.

13:62-4.25 Drivers

(a) All drivers shall be at least 18 years of age.

(b) All drivers are required to wear fire resistant underwear and one piece fire resistant clothing covering their body, legs, and arms.

(c) All drivers are required to wear fire resistant gloves.

(d) All drivers are required to wear fire resistant shoes and it is recommended that fire resistant socks be worn.

13:62-4.26 Helmets and head cushions

(a) All drivers must wear a helmet in condition which meets or exceeds the American National Standard Institute (A.N.S.I.) Z-90.1 testing standard.

(b) All vehicles shall be equipped with a head cushion attached to the roll-on bar or to the back portion of a one-piece seat. The cushion shall be mounted so that it shall be at the approximate height of the center of the driver's helmet.

(c) The head cushion shall be a minimum of 16 square inches in area with at least two inch padding. The minimum length of any side of the head cushion shall be four inches.

(d) A support cushion shall be located behind the rear portion of the seat, attached to the roll cage and at least ⅛ of an inch thick.

13:62-4.27 Goggles or face shield

The driver of all vehicles not equipped with windshields shall wear windproof, shatterproof goggles or a face shield of the type which meets or exceeds U.S.A. standard Specifications for Head, Eye and Respiratory Protection Z2.1-1959 testing standard.

13:62-4.28 Arm restraints; window nets

All drivers shall use arm restraints or window nets.

13:62-4.29 Transmission safety mats

(a) Any vehicle equipped with an automatic transmission shall have a steel mat, plate, or blanket installed over the transmission so as to protect the driver from injury caused by fragmentation of the automatic transmission upon explosion.

(b) All cooling devices within the driver's compartment shall be shielded from the driver to protect against injuries.

13:62-4.30 Enclosed drive shaft

The drive shaft of a vehicle shall be enclosed or secure, front and rear, by a steel strap ¼ inch thick by one inch wide, a ½ inch steel rod, or one inch steel tubing with .06 wall thickness.

13:62-4.31 Water overflow tank

Water overflow reservoirs shall not be installed inside the driver compartment. Tanks or reservoirs mounted in the roll cage must be fully shielded to protect the driver.

13:62-4.32 Speed limits

(a) Vehicles traveling in the pit area or staging area must obey a five miles per hour speed limit.

(b) Vehicles utilizing a return road will be limited to a 15 miles per hour speed limit.

13:62-4.33 Licensed facilities

Oval racing events shall only take place in licensed facilities.

SUBCHAPTER 5. SAFETY REQUIREMENTS FOR VEHICLES AND PERSONNEL: DRAG RACING

13:62-5.1 Construction requirements

(a) Hubrail construction shall comply in all respects with the requirements of this chapter.

(b) The licensee shall provide and maintain hubrails on the outer area of the track and around the entire area thereof. Where spectators are allowed in the return road or within the inner area of the track, the licensee shall provide and maintain a hubrail, as described in this section, around the inner area of the track.

(c) The hubrail shall consist of at least two planks of hard wood or other suitable materials, at least 10 inches in width by three inches in thickness.

(d) The hubrail shall be supported by posts of similar material of at least six inches in width and six inches in thickness or round posts not less than seven inches in diameter, which are set in the ground at least four feet and shall extend above the ground at least two feet. The post shall be no higher than the hubrail planking and shall be spaced no more than six feet apart.

(e) Two planks of hardwood or other suitable material shall be mounted on the side of the post facing the track and running horizontally and parallel to each other.

You're viewing an archived copy from the New Jersey State Library.

(f) On the opposite side of the posts, not more than eight inches from the top thereof, there shall be a ¾ inch steel cable running around the circumference of the track and securely fastened to the post with eye bolts.

(g) The hubrail entrance and exit gates to the pit area shall be closed while vehicles are in motion on the track, unless alternate arrangements have been made by the installation of barriers of a type which will prevent cars out of control from leaving the track and entering the immediate pit working area.

(h) Where the licensee wishes to use methods other than gates, an inspection of such installations by a representative of the Superintendent is required.

(i) The hubrail opening for vehicles shall be so located that a vehicle leaving the track must turn 90 degrees before entering the pit area.

(j) At locations using methods other than gates between the pit area and the track, the licensee shall provide a guard to prevent unauthorized persons from entering the track area.

(k) The use of baled hay or straw or any similar material as a protective device between participating vehicles and spectators is specifically prohibited.

13:62-5.2 Fences

All fences installed for the purpose of limiting spectator areas shall be constructed of welded wire fabric or chain link and shall be at least six feet in height and so constructed as not to be easily lifted, climbed over or moved aside.

13:62-5.3 Starting tree lights

(a) Strips used for acceleration and performance tests need be equipped with only one red light on the starting tree.

(b) The lights shall be controlled by a single switch. The licensee shall provide a responsible person to operate such switch during the entire time of each race.

(c) When the red lights are illuminated, all racing vehicles on the track shall stop as soon as possible and remain stopped until such time as the red lights are turned out.

13:62-5.4 Starters

The licensee shall provide a Starter(s) located within a starter's area with an unobscured view of the entire racing surface from which to control the racing event.

13:62-5.5 Maximum protection

(a) All hubrails, fences, stands and buildings shall be constructed and maintained so as to afford maximum protection for spectators.

(b) Any spectator stand erected or relocated on or after April 1, 1960, shall be located at least 25 feet from the hubrail.

13:62-5.6 Location

(a) A location approved for acceleration and performance tests shall provide for a stopping distance at least equal to the acceleration and timing distance.

(b) The acceleration area shall not exceed 1,386 feet.

(c) The entire racing strip, including the deceleration area, shall be paved.

(d) The end of the acceleration area may be marked by an overhead banner, provided the supports are of such construction that they will not present a hazard to the vehicles. The height of the banner shall be at least 14 feet above the surface of the strip.

13:62-5.7 Vehicle equipment

(a) Safety belts, shoulder harness and crotch belt shall be provided.

1. A quick release type safety belt, shoulder harness and crotch belt in good condition shall be compulsory on all vehicles.

2. Both ends of the safety belt, shoulder harness and crotch belt shall be fastened to the frame of the vehicle.

3. All fittings and connections of the safety belt, shoulder harness and crotch belt shall be metal.

4. All safety belts and shoulder harnesses shall be worn properly the entire time the vehicle is being driven in a race.

5. All safety belts and shoulder harnesses shall bear the date of manufacture and shall not be used for more than five years from the date.

6. The shoulder harness shall be secured to the frame of the vehicle and come over a round bar at the driver's shoulder height.

7. No alterations shall be allowed to any manufactured design of seat belts.

8. The exception to this section is for street legal cars. These vehicles shall be equipped with the safety belt(s) that was provided by the manufacturer.

13:62-5.8 Inspection of vehicles

(a) The licensee shall arrange for the inspection of each participating vehicle prior to the event, to determine that it meets the requirements of this chapter. The licensee shall prohibit vehicles not meeting the requirements of this chapter shall be barred by the licensee from participation or practice.

(b) Vehicles which are to be used in automobile races or exhibitions of driving skill are subject to unannounced inspection and approval at any time by the Superintendent or designee.

13:62-5.9 Number of persons in vehicle

No vehicle shall carry more than one person at any time during a race or warm-up, except during a bona fide training period an instructor may accompany the trainee.

13:62-5.10 Seats

(a) A molded metal or fiberglass seat with openings which allow a seat belt bolted to the frame to come through, shall be attached to the frame with at least four three line 5/16 inch bolts. Two bolts shall be installed at the bottom of the seat not more than three inches from the outside edge and two bolts shall be installed at the two most practical widely spaced points at the top of the seat back. A metal strap at least two inches in width and at least ⅛ inch thick shall connect each set of bolts.

(b) Vehicles equipped with a metal seat are not required to have a metal strap connected to each set of bolts. These vehicles are required to have a larger washer on each bolt.

13:62-5.11 Exhaust system

The exhaust system shall be designed and constructed so as to direct the exhaust flow out and away from the driver.

13:62-5.12 Fire wall and flooring

(a) All vehicles shall have suitable metal flooring from the front firewall to the center of the driver's seat.

(b) All vehicles shall have a permanent fire wall between the fuel supply and the driver, unless the fuel supply consists of a shell with an inner rubber bladder in which case the fire wall is not required.

13:62-5.13 Fuel lines and fuel pumps

(a) A fuel line or fuel pump is prohibited in the driver's compartment unless properly shielded to prevent leakage in the event the line or pump is damaged or broken. Shielding shall consist of the steel braided material.

(b) Fuel lines shall be more than three inches from the headers, unless shielded by metal.

13:62-5.14 Fuel tanks

(a) Except as set forth in (b) below, vehicles using a self-contained fuel cell with an inner rubber bladder shall bolt the self-contained fuel cell to the frame of the vehicle utilizing an "x" type frame work under the cell. At least three one inch metal straps quarter inch thick bolted to the frame of the vehicle by at least two ⅜ inch three line bolts and angled so that it goes around the cell, except for the bottom, so as to apply maximum pressure against the tank to the frame.

(b) Units not utilizing a "x" type frame shall have a four one inch metal straps, ¼ inch thick, bolted to the frame of the vehicle by at least two ⅜ inch three line bolts and angled to go entirely around the cell to apply maximum pressure against the tank to the frame.

(c) A reinforcing member of the same kind and size material as that used in the roll cage of the chassis shall be installed to the rear of the fuel tank joining the rearmost portion of the chassis.

You're viewing an archived copy from the New Jersey State Library.

(d) A vehicle utilizing a fuel tank mounted to the front of the front fire wall shall have a reinforcing member of the same kind of material as that used in the roll cage or chassis, installed to afford maximum protection to the tank.

13:62-5.15 Refueling

(a) In all instances where refueling is permitted with the engine running, a member of the pit crew, equipped with a 10 BC or greater fire extinguisher, shall be in close proximity to the fill pipe of the fuel tank.

(b) Smoking shall be prohibited in any area where fuel is being transferred or stored.

(c) The driver compartment shall not be occupied when the vehicle is being refueled if the fill pipe is located within 24 inches of the cockpit, except that the driver compartment may be occupied when the vehicle is being refueled from gravity fed fuel containers.

(d) The use of welding and acetylene torches is not permitted in any area where fuel is being transferred or stored unless a fully charged fire extinguisher is in close proximity.

13:62-5.16 Batteries

(a) Batteries, located in the driver compartment, shall be secured and shielded to prevent leakage in the event of damage or turnover.

(b) Batteries located adjacent to the fuel supply of the vehicle it shall be secured in a metal box bolted to the frame of the vehicle by at least four ⅜ inch three line bolts and in such a manner to apply maximum pressure against the metal box to the frame. The battery shall also have a marine box cover secured to the top of the metal box as to not allow any movement of the battery.

(c) Batteries located in any other area not specified in (a) and (b) above shall be secured and shielded to prevent leakage in the event of damage or turnover.

13:62-5.17 Braking system and pedal reserve

(a) The licensee or designee shall test and approve each race car for brake pedal reserve before the car leaves the pit area to enter the track.

(b) The licensee or designee shall prohibit any vehicle from participating in any event or exhibition if the braking system includes the direct application of pressure to any of the tires or with apparent deficiencies.

13:62-5.18 Tires

(a) No vehicle shall be permitted to participate in any race if the tires are equipped or fitted with any studs, hobs, or other projections.

(b) No vehicle shall be permitted to participate in any race if the tires are in an unsafe condition.

13:62-5.19 Ignition switch

(a) All vehicles shall have an ignition switch which is easily accessible within the driver compartment and conspicuously marked.

(b) All motorcycles shall be equipped with a functional tether mechanical kill device so that the ignition is shut off if the rider separates from the vehicle.

13:62-5.20 Repairs

No repairs shall be made on any vehicle during the course of a race unless the vehicle is removed to the pit area.

13:62-5.21 Drivers

(a) All drivers shall be at least 18 years of age.

(b) It is recommended that all drivers wear fire resistant underwear and one piece fire resistant clothing covering their body, legs, and arms.

(c) It is recommended that all drivers wear fire resistant gloves.

(d) It is recommended that all drivers wear fire resistant shoes and it is recommended that fire resistant socks be worn.

(e) Drivers of motorcycles and street legal cars are not required to wear fire resistant clothing, but it is recommended.

13:62-5.22 Helmets and head cushions

All drivers shall wear a helmet in condition which meets or exceeds the American National Standard Institute (A.N.S.I.) Z-90.1 testing standard.

13:62-5.23 Goggles or face shield

The driver of all vehicles not equipped with windshields shall wear windproof, shatterproof goggles or a face shield of the type which meets or exceeds U.S.A. standard Specifications for Head, Eye and Respiratory Protection Z2.1-1959 testing standard.

13:62-5.24 Transmission safety mats

(a) Any vehicle equipped with an automatic transmission shall have a steel mat, plate, or blanket installed over the transmission so as to protect the driver from injury caused by fragmentation of the automatic transmission upon explosion.

(b) All cooling devices within the driver's compartment shall be shielded from the driver to protect against injuries.

(c) Street legal cars are exempt from this section provided that no modifications have been done to the vehicle.

13:62-5.25 Enclosed drive shaft

The drive shaft of a vehicle shall be enclosed or secure, front and rear, by a steel strap ¼ inch thick by one inch wide, a ½ inch steel rod, or one inch steel tubing with .06 wall thickness.

13:62-5.26 Water overflow tank

Water overflow reservoirs shall not be installed inside the driver compartment. Tanks or reservoirs mounted in the roll cage must be fully shielded to protect the driver.

13:62-5.27 Vehicle lighting

All vehicles shall be equipped with a functioning taillight so that the starter is able to see the competing vehicles during night racing.

13:62-5.28 Vehicles equipped with parachutes

(a) All vehicles equipped with parachutes shall have a red streamer attached to the safety pin. The safety pin shall be removed from the parachutes before the starting lights are activated.

(b) All vehicles utilizing two or more parachutes shall have at least two anchoring points for each parachute, each separate from the other.

13:62-5.29 Exceptions

(a) Cars need not have rollover bars or door fastening, provided there has been no modification of either body or engine.

(b) Street legal cars are exempt from having an enclosed drive shaft provided that no modifications have been done to the vehicle.

13:62-5.30 Spectator protection

The licensee shall provide spectator protection by a standard hubrail and six-foot high welded wire fabric or chain link fence so constructed as not to be easily lifted, climbed over or moved aside.

13:62-5.31 Pit area fences

The pit area, if located behind the starting line, shall be separated from the track by a six-foot high welded fabric or chain link fence so constructed as not to be easily lifted, climbed over or moved aside.

13:62-5.32 Vehicle positioning

Racing vehicles may line up behind the starting line. Only drivers and officials are permitted in this area.

13:62-5.33 "Burnouts"

No "burnouts" shall be made unless the driver is secured in the vehicle and the doors are firmly closed.

13:62-5.34 Speed limits

(a) All vehicles returning after a race event, using the return road, either under their own power or being towed shall obey a 15 miles per hour speed limit until the vehicle has been returned to the staging lanes or pits.

(b) All vehicles traveling in the pit area or staging area shall obey a five miles per hour speed limit.

You're viewing an archived copy from the New Jersey State Library.

13:62-5.35 Minimum age requirement for a street legal car racing events

No persons will be permitted to participate in a street legal car racing event unless that person is 17 years of age and possesses a valid driver's license from his/her state of residence.

13:62-5.36 Persons permitted in the pit area

(a) All persons with pit credentials are to be permitted in the pit area. Persons under the age of 17 are to be permitted in the pit area as long as the individual has the proper pit credentials and is accompanied by an adult.

(b) No one under the age of 17 will be permitted in the staging area under any circumstance unless otherwise specified.

13:62-5.37 Vehicles allowed in return road

(a) Only official vehicles are permitted to travel the return road while a racing event is in progress. An official vehicle means a vehicle displaying the competitor's vehicle number and shall be limited to one official vehicle per competition vehicle.

(b) All official vehicles shall obey the following speed limits:

1. All vehicles returning after a race event, using the return road, either under their own power or being towed shall obey a 15 miles per hour speed limit until the vehicle has been returned to the staging lanes or pits.

2. All vehicles traveling in the pit area or staging area shall obey a five miles per hour speed limit.

(c) All official vehicles shall wait outside the return road until the competition vehicle has entered the burn out area and is preparing to compete.

13:62-5.38 Licensed facilities

Drag racing events shall only take place in licensed facilities.

SUBCHAPTER 6. MOTORCYCLE AND QUAD VEHICLES RACING EVENTS (OVAL RACING)

13:62-6.1 Licensed facilities

Motorcycle and quad vehicle oval racing events shall only take place in licensed facilities.

13:62-6.2 Hubrail construction

(a) Hubrail construction shall comply in all respects with the requirements of this chapter.

(b) The licensee shall provide and maintain hubrails on the outer circumference of the track and around the entire circumference thereof. Where spectators are allowed in the infield or within the inner circumference of the track, the licensee shall provide and maintain a hubrail, as described in this section, around the inner circumference of the track.

(c) The hubrail shall consist of at least two planks of hard wood or other suitable materials, at least 10 inches in width by three inches in thickness.

(d) The hubrail shall be supported by posts of similar material of at least six inches in width and six inches in thickness or round posts not less than seven inches in diameter, which are set in the ground at least four feet and shall extend above the ground at least two feet. The post shall be no higher than the hubrail planking and shall be spaced no more than six feet apart.

(e) Two planks of hardwood or other suitable material shall be mounted on the side of the post facing the track and running horizontally and parallel to each other.

(f) On the opposite side of the posts, not more than eight inches from the top thereof, there shall be a ¾ inch steel cable running around the circumference of the track and securely fastened to the post with eye bolts.

(g) The hubrail entrance and exit gates to the pit area shall be closed while vehicles are in motion on the track, unless alternate arrangements have been made by the installation of barriers of a type which will prevent cars out of control from leaving the track and entering the immediate pit working area.

(h) Where the licensee wishes to use methods other than gates, an inspection of such installations by a representative of the Superintendent is required.

(i) The hubrail opening for vehicles shall be so located that a vehicle leaving the track must turn 90 degrees before entering the pit area.

(j) At locations using methods other than gates between the pit area and the track, the licensee shall provide a guard to prevent unauthorized persons from entering the track area.

(k) The use of baled hay or straw or any similar material as a protective device between participating vehicles and spectators is specifically prohibited.

13:62-6.3 Exceptions

(a) Hubrail posts constructed for use on motorcycle tracks shall be no higher than the hubrail planking.

(b) Hubrails constructed for use on motorcycle tracks shall consist of safety rails two feet high, constructed of two two-inch by 12-inch planks, on four-inch by four-inch stanchions spaced not more than six feet apart, and so embedded in the ground that they will not pull out if struck.

(c) As an alternative to the two-inch by 12-planks, two planks made of marine plywood, ¾ inches thick and 12 inches wide may be used on motorcycle tracks. These rails shall be backed up either by a wire cable similar to the wire cable used on automobile hubrails, except that it need not exceed ½ inch in diameter, or in the alternative, a mound of packed earth shall be constructed in the back of the safety rail at least 18 inches high, and tapering to the ground level between the rail and the spectators.

13:62-6.4 Fences

All fences installed for the purpose of limiting spectator areas shall be constructed of welded wire fabric or chain link and shall be at least six feet in height and so constructed as not to be easily lifted, climbed over or moved aside, except at motocross events the fence shall be of the same construction but at least five feet in height.

13:62-6.5 Red and amber lights

(a) Each track used for motorcycle racing, except those used for acceleration and performance tests, shall be equipped with a system of at least four red lights and four amber lights so arranged that at least one light of each color will be visible to the drivers as they enter each turn.

(b) The lights shall be controlled by a single switch. The licensee shall provide responsible person to operate such switch during the entire time of each race.

(c) When the red lights are illuminated, all racing vehicles on the track shall stop as soon as possible and remain stopped until such time as the red lights are turned out.

(d) When the amber lights are illuminated, all racing vehicles on the track shall slow down and maintain their position unless otherwise directed to change position by a track official.

13:62-6.6 Flagmen

(a) Tracks over one mile in length may use flagmen in lieu of the red and amber lights, provided the assistant flagman in the starter's stand is in constant two-way radio or telephone communication with all flagmen.

(b) Flagmen shall be positioned so as to be visible to drivers entering each turn on the track or course.

(c) On display of the red flag all racing vehicles shall stop as soon as possible and remain stopped until such time as the red flag is removed from display.

(d) On display of the amber flag all racing vehicles shall slow down and maintain their position unless directed to change position by a track official.

13:62-6.7 Starters

(a) The licensee shall provide starter(s) located within a starter's stand with an unobscured view of the entire racing surface from which to control the racing event.

(b) All circular or oval tracks utilizing the services of flagmen to control the event shall also have an assistant flagman in the starter's stand. The assistant flagmen used to control or start a race shall be in the starter's stand when starting and during the race.

You're viewing an archived copy from the New Jersey State Library.

13:62-6.8 Maximum protection

(a) All hubrails, fences, stands and buildings must be constructed and maintained so as to afford maximum protection for spectators.

(b) Any spectator stand erected or relocated on or after April 1, 1960, must be located at least 25 feet from the hubrail.

13:62-6.9 Eye protection

All drivers shall wear windproof, shatterproof goggles or a face shield of the type which meets or exceeds U.S.A. standard Specifications for Head, Eye and Respiratory Protection Z2.1-1959 testing standard.

13:62-6.10 Helmets

All drivers shall wear a helmet in condition which meets or exceeds the American National Standard Institute (A.N.S.I.) Z-90.1 testing standard.

13:62-6.11 Braking system

(a) A representative of the track licensee will be required to test front and rear brake application before the vehicle leaves the area to enter the track.

(b) This section is not to be construed to require brakes on racing motorcycles with a compression ratio higher than 10 to one or with a compression ratio which, in the opinion of the Superintendent, is sufficiently high to bring the motorcycle to a stop when the ignition is cut off.

13:62-6.12 Shutoff device

(a) A "shutoff" device shall be affixed to the handlebars on all competing motorcycles.

(b) A "shutoff" device shall be of a type which is designed, constructed and maintained to stop the motor of the motorcycle immediately upon releasing or pressing the said device.

13:62-6.13 Minimum age requirements of motorcycle racing events

(a) All persons, including officials, persons and participants, are permitted to participate in a motorcycle race or enter the pit area provided they have reached the age of 18.

(b) All participants shall possess and display, upon request, a valid motorcycle license or endorsement.

(c) All persons participating in an event shall have proper documentary evidence to substantiate proof of age.

13:62-6.14 Quad vehicle requirements

(a) Quad vehicles shall be equipped with a functional tether type mechanical kill device, so that the ignition is shut off upon the driver's separation from the vehicle.

(b) Quad vehicle engines shall be fitted with a guard completely enclosing the primary drive.

(c) Rear chain guards, roll bars and seat belts are not required.

13:62-6.15 Clothing requirements

Drivers shall wear safety clothing to afford maximum protection to the driver according to industry standards. It is recommended that this clothing be of a fire retardant material.

13:62-6.16 Batteries

Batteries shall be secured and shielded to prevent leakage in the event of damage or turnover.

13:62-6.17 Speed limits

All vehicles traveling in the pit area or staging area shall obey a five miles per hour speed limit.

SUBCHAPTER 6A. MOTOCROSS AND QUAD VEHICLE RACING EVENTS (SERPENTINE RACING)

13:62-6A.1 Licensed facilities

Motocross and quad vehicle serpentine racing events shall only take place in licensed facilities.

13:62-6A.2 Construction requirements

(a) Construction of hubrails, fences and other safety devices for motocross and quad vehicles, serpentine racing events, must comply with the provisions of this subchapter.

(b) Design and construction of motocross and quad vehicle race courses must be approved by the Superintendent or his or her designee prior to the racing event.

(c) A sketch or sketches of the track and associated areas shall be provided as near to scale as practicable indicating the location of required safety features.

(d) Required safety features are hub rails, fences, crash protection for participants, light or flagmen positions, spectator seating, entrances and exits, pit facility locations and other physical factors affecting the safety of spectators and participants. This requirement shall not apply to locations licensed prior to January 1, 1963, unless alterations are made to the track and associated areas on or after January 1, 1963.

13:62-6A.3 Fences

All fences installed for the purpose of limiting spectator areas shall be constructed of welded wire fabric or chain link and shall be at least six feet in height and so constructed as not to be easily lifted, climbed over or moved aside, except at motocross events the fence shall be of the same construction but at least five feet in height.

13:62-6A.4 Flagmen

(a) Licensees may use flagmen provided an assistant flagman is in the starter's area and is in constant two-way radio or telephone communication with all flagmen.

(b) Flagmen shall be positioned so as to be visible to drivers entering each turn on the track or course.

(c) All working personnel and officials having access to the pit area or racing surface shall be at least 16 years of age.

1. The exception to (c) above is that the minimal age for flagmen must be 18 years of age when utilizing a flat track.

(d) On display of the red flag, all racing vehicles shall stop as soon as possible and remain stopped until such time as the red flag is removed from display.

(e) On display of the amber flag all racing vehicles are to slow down and maintain their position.

13:62-6A.5 Starters

Starter(s) shall be located within a starter's area with an unobscured view of the entire racing surface from which to control the racing event.

13:62-6A.6 Additional guidelines for motocross events

(a) The following guidelines shall be utilized for motocross events:

1. Participants ages 10 to 15 may compete provided the vehicle does not exceed 85 cc.

2. Participants ages 12 to 15 may compete in any additional class not exceeding 125cc, provided the driver possesses one year racing experience and can demonstrate racing ability to the satisfaction of track officials.

3. Participants ages 14 to 18 may compete in a separate class.

4. A person competing in any one of the above classes shall not participate in any other class.

5. The designation "cc" shall be conspicuously marked on the racing vehicle.

6. Hubrail construction does not pertain to motocross events that utilize jumps and serpentine type racing during competition.

13:62-6A.7 Clothing requirements

Drivers shall wear safety clothing to afford maximum protection to the driver according to industry standards. It is recommended that this clothing be of a fire retardant material.

13:62-6A.8 Helmets

All drivers shall wear a helmet in condition which meets or exceeds the American National Standard Institute (A.N.S.I.) Z-90.1 testing standard.

13:62-6A.9 Goggles or face shield

All drivers shall wear windproof, shatterproof goggles or a face shield of the type which meets or exceeds U.S.A. standard Specifications for Head, Eye and Respiratory Protection Z2.1-1959 testing standard.

You're viewing an archived copy from the New Jersey State Library.

13:62-6A.10 Batteries

Batteries shall be secured and shielded to prevent leakage in the event of damage or turnover.

13:62-6A.11 Quad vehicle requirements

(a) Quad vehicles shall be equipped with a functional tether type mechanical kill device, so that the ignition is shut off upon the driver's separation from the vehicle.

(b) Quad vehicle engines shall be fitted with a guard completely enclosing the primary drive.

(c) Rear chain guards, roll bars and seat belts are not required.

(d) Quad vehicles shall be equipped with additional nerfing bars to the front of the rear wheels in order to prevent injury to the driver.

(e) Quad vehicle flagmen shall be 16 years of age.

13:62-6A.12 Pit area driving prohibition

No motorcycle or quad vehicle is to be driven, under power, in the pit area.

SUBCHAPTER 6B. MOTOCROSS ENDURO RACING EVENTS

13:62-6B.1 Licensed facilities

Motocross enduro racing events shall only take place in licensed facilities.

13:62-6B.2 Construction requirements

(a) Construction of hubrails, fences and other safety devices for motocross enduro racing events must comply with the provisions of this subchapter.

(b) Design and construction of motocross and quad vehicle race courses must be approved by the Superintendent or his or her designee prior to the racing event.

(c) A sketch or sketches of the track and associated areas shall be provided as near to scale as practicable indicating the location of required safety features.

(d) Required safety features are hubrails, fences, crash protection for participants, light or flagmen positions, spectator seating, entrances and exits, pit facility locations and other physical factors affecting the safety of spectators and participants. This requirement shall not apply to locations licensed prior to January 1, 1963, unless alterations are made to the track and associated areas on or after January 1, 1963.

13:62-6B.3 Areas designated as spectator areas and fences

(a) The licensee shall designate spectator areas throughout the race course and provide security to prevent spectators from entering the race course.

(b) Fences used to prevent spectators from entering the race course shall be constructed of welded wire fabric or chain link and shall be at least six feet in height and so constructed as not to be easily lifted, climbed over or moved aside. The fence shall be of the same construction but at least five feet in height.

13:62-6B.4 Flagmen

(a) Licensees may use flagmen provided an assistant flagman is in the starter's area and is in constant two-way radio or telephone communication with all flagmen.

(b) Flagmen shall be positioned so as to be visible to drivers entering each turn on the track or course.

(c) All working personnel and officials having access to the pit area or racing surface shall be at least 18 years of age.

(d) On display of the red flag, all racing vehicles shall stop as soon as possible and remain stopped until such time as the red flag is removed from display.

(e) On display of the amber flag, all racing vehicles shall slow down and maintain their position.

13:62-6B.5 Starters

The licensee shall provide a starter(s) located within a starter's area with an unobscured view of the starting line from which to control the start of the racing event.

13:62-6B.6 Additional guidelines for motocross racing enduro events

(a) All participants shall be 18 years of age and be in possession of a valid motorcycle driver's license from his or her state of residence.

(b) All participating motorcycles must be able to pass all of the motor vehicle regulations governing motorcycles under Title 39 of the New Jersey Motor Vehicle Laws.

(c) In the event that the race course includes local roadway or highways, the participants shall adhere to all of the motor vehicle regulations for that roadway.

13:62-6B.7 Clothing requirements

Drivers shall wear safety clothing to afford maximum protection to the driver according to industry standards. It is recommended that this clothing be of a fire retardant material.

13:62-6B.8 Helmets

All drivers shall wear a helmet in safe condition which meets or exceeds the American National Standard Institute (A.N.S.I.) Z-90.1 testing standard.

13:62-6B.9 Goggles or face shield

All drivers shall wear windproof, shatterproof goggles or a face shield of the type which meets or exceeds U.S.A. standard Specifications for Head, Eye and Respiratory Protection Z2.1-1959 testing standard.

13:62-6B.10 Batteries

Batteries shall be secured and shielded to prevent leakage in the event of damage or turnover.

13:62-6B.11 Pit area driving prohibition

No motorcycle is to be driven under power in the pit area.

SUBCHAPTER 7. SNOWMOBILE EVENTS

13:62-7.1 Track construction

(a) Construction of hubrails, fences and other safety devices for snowmobile events must comply with the provisions of this subchapter.

(b) The licensee shall provide and maintain hubrails on the outer circumference of the track and around the entire circumference thereof. Where spectators are allowed in the infield or within the inner circumference of the track, the licensee shall provide a hubrail, as described in this section, around the inner circumference of the track.

(c) The hubrail shall consist of at least two planks of hard wood or other suitable materials, at least 10 inches in width by three inches in thickness.

(d) The hubrail shall be supported by posts of similar material of at least six inches in width and six inches in thickness or round posts not less than seven inches in diameter, which are set in the ground at least four feet and shall extend above the ground at least two feet. The post shall be no higher than the hubrail planking and shall be spaced no more than six feet apart.

(e) Two planks of hardwood or other suitable material shall be mounted on the side of the post facing the track and running horizontally and parallel to each other.

(f) On the opposite side of the posts, not more than eight inches from the top thereof, there shall be a ¾ inch steel cable running around the circumference of the track and securely fastened to the post with eye bolts.

(g) The hubrail entrance and exit gates to the pit area shall be closed while vehicles are in motion on the track, unless alternate arrangements have been made by the installation of barriers of a type which will prevent cars out of control from leaving the track and entering the immediate pit working area.

(h) Where the licensee wishes to use methods other than gates, an inspection of such installations by a representative of the Superintendent is required.

(i) The hubrail opening for vehicles shall be so located that a vehicle leaving the track must turn 90 degrees before entering the pit area.

You're viewing an archived copy from the New Jersey State Library.

(j) At locations using methods other than gates between the pit area and the track, the licensee shall provide a guard to prevent unauthorized persons from entering the track area.

(k) The use of baled hay or straw or any similar material as a protective device between participating vehicles and spectators is specifically prohibited.

13:62-7.2 Fences

All fences installed for the purpose of limiting spectator areas shall be constructed of welded wire fabric or chain link and shall be at least six feet in height and so constructed as not to be easily lifted, climbed over or moved aside, except at motocross events the fence shall be of the same construction but at least five feet in height.

13:62-7.3 Red and amber lights

(a) Each track used for snowmobile racing shall be equipped with a system of at least four red lights and four amber lights so arranged that at least one light of each color will be visible to the drivers as they enter each turn.

(b) The lights shall be controlled by a single switch, the licensee shall provide a responsible person must be assigned to be on duty, and to operate such switch during the entire time of each race.

(c) When the red lights are illuminated, all racing vehicles on the track shall stop as soon as possible and remain stopped until such time as the red lights are turned out.

(d) When the amber lights are illuminated, all racing vehicles on the track shall slow down and maintain their position unless otherwise directed to change position by a track official.

13:62-7.4 Flagmen

(a) Licensees may use flagmen in lieu of the red and amber lights provided the assistant flagman in the starter's stand is in constant two-way radio or telephone communication with all flagmen.

(b) On display of the red flag, all racing vehicles shall stop as soon as possible and remain stopped until such time as the red flag is removed from display.

(c) On display of the amber flag, all racing vehicles shall slow down and maintain their position unless directed to change position by a track official.

13:62-7.5 Starters

(a) The licensee shall provide a starter(s) located within a starter's area with an unobscured view of the entire racing surface from which to control the racing event.

(b) All circular or oval tracks, road courses and other locations utilizing the services of flagmen to control the event shall also have an assistant flagman in the starter's area. The assistant flagman used to control or start a race shall be in the starter's stand when starting and during the race.

13:62-7.6 Maximum protection

(a) All hubrails, fences, stands and buildings shall be constructed and maintained so as to afford maximum protection for spectators.

(b) Any spectator stand erected or relocated on or after April 1, 1960, must be located at least 25 feet from the hubrail.

13:62-7.7 Safety requirements; vehicles and personnel

(a) All participants in a snowmobile race shall wear a safety helmet which meets or exceeds the American National Standard Institute (ANSI) Z-90.1 testing standard.

(b) All participants in a snowmobile race shall wear windproof goggles or face shields which meet or exceed U.S.A. Standard Specifications for Head, Eye, and Respiratory Protection Z2.1-1959 testing standard.

(c) All participants shall wear safety clothing to afford maximum protection to the driver according to industry standards. It is recommended that this clothing be of a fire retardant material.

13:62-7.8 Exhaust system

All exhaust systems shall be directed out of the cowl area and away from the operator.

13:62-7.9 Snow flaps

All snowmobiles shall be equipped with a rear snow flap designed and maintained to contain snow, water, mud and the like at all speeds.

13:62-7.10 Shutoff device

A "shutoff" device shall be affixed to the handlebars near the hand position. This device shall be of the type which is designed, constructed, and maintained to stop the motor immediately upon releasing or pressing of said device.

13:62-7.11 Engine and transmission shielding

All snowmobiles shall have engine and transmission shields designed and constructed to protect the driver or bystander from fragments in the event of disintegration.

13:62-7.12 Batteries

Batteries shall be secured and shielded to prevent leakage in the event of damage or turnover.

13:62-7.13 Speed limits

All vehicles traveling in the pit area or staging area shall obey a five miles per hour speed limit.

13:62-7.14 Licensed facilities

Snowmobile racing events shall only take place in licensed facilities.

SUBCHAPTER 8. [GO-CART] **GO-KART** EVENTS

13:62-8.1 Licensed facilities

[Go-cart] **Go-kart** events shall only take place in licensed facilities.

13:62-8.2 Track construction

(a) Construction of hubrails, fences and other safety devices for [go-cart] **go-kart** events must comply in all respects with provisions of this subchapter unless the licensee has written approval for any changes from the Superintendent or his designee.

(b) The hubrail construction for [go-cart] **go-kart** events may be the same as the hubrail construction used for motorcycle events in that planks made of marine plywood three-quarters inches thick and 12 inches wide may be used.

(c) (No change.)

13:62-8.3 Safety requirements

(a) [Go-carts] **Go-karts** and personnel participating in races or exhibitions of driving skill on any track or facility licensed by the Superintendent shall comply with the following requirements except as provided by N.J.A.C. 13:62-8.4.

1. No person under 18 years of age may operate a [go-cart] **go-kart** in any race or exhibition of driving skill, nor shall any such person be permitted in the pit area during such race or exhibition of driving skill.

2. [Go-carts] **Go-karts** participating in races or exhibitions of driving skill shall have a wheel base of not less than 40 inches nor greater than 50 inches measured from the center of the axle.

3. [Go-carts] **Go-karts** participating in races or exhibitions of driving skill shall be of length not exceeding 72 inches.

4. [Go-carts] **Go-karts** participating in races or exhibitions of driving skill shall be of a width at least ⅔ of the wheelbase as measured from the center of the tread of the front tires.

5. [Go-carts] **Go-karts** participating in races or exhibitions of driving skill shall be of a height not exceeding 26 inches as measured from the top of the driver's seat.

6. The frame of all [go-carts] **go-karts** shall be of metal construction.

7. All [go-carts] **go-karts** shall contain a metal fire wall between the driver and engine with no openings between engine and driver. The fire wall shall be constructed as to not present any sharp edges.

8. All [go-carts] **go-karts** shall contain a floor of metal construction with no openings between the driver and the ground.

9. Steering must be directed with all linkage bolts and nuts cotterkeyed or safety-wired. All rod ends must have universal type swivel joints.

You're viewing an archived copy from the New Jersey State Library.

10. No [go-cart] **go-kart** will be permitted to participate in any race or exhibition of driving skill unless it is equipped with a braking system operated by a foot pedal. No [go-cart] **go-kart** will be permitted to participate if the braking system includes direct application of pressure to any of the tires or with apparent deficiencies.

11. The exhaust system must be designed and constructed so that exhaust gases are carried away from and to the rear of the driver.

12. All [go-carts] **go-karts** shall be equipped with a foot-operated throttle.

13. The fuel and lubrication system on all [go-carts] **go-karts** must be designed so as to prevent leakage or spillage during competition.

14. No [go-cart] **go-kart** shall be equipped with a transmission, gear-box or other device which permits a change of gear or sprocket ratios while the vehicle is in motion.

15. All [go-carts] **go-karts** must be equipped with a suitable chain guard or guards.

16. The driver's compartment shall be equipped with side rails, side plates or other device to afford the driver lateral support and protection.

17. Every [go-cart] **go-kart** must be equipped with a quick release type seat belt in good condition. The seat must be fastened to the frame of the cart at both ends. The seat belt must be in use during the entire time the vehicle is being driven in a race. All fittings and connections on the safety belt must be metal. Safety belts with cloth or plastic fittings on connections may not be used. All safety belts must bear the date of manufacture and may not be in use for more than five years.

18. Every [go-cart] **go-kart** shall be equipped with a rollover bar mounted a minimum of three inches above and six inches behind the driver's head designed and constructed so as to provide maximum protection for the driver.

19. Every [go-cart] **go-kart** must be equipped with auxiliary bumpers, sometimes known as "nerfing bars," of a construction and design to afford a participant maximum protection against injury.

20. All drivers must wear windproof, shatterproof goggles in any race or exhibition of driving skill. Such goggles shall meet or exceed U.S.A. Standard Specifications for Head, Eye, and Respiratory Protection Z2.1-1959 testing standards.

21. No repairs may be made on any [go-cart] **go-kart** during the course of a race unless the vehicle is removed to the pit area.

22. A starting apron shall be provided where the [go-carts] **go-karts** are to be started. Persons shall not enter the race course to push a [go-cart] **go-kart**. A [go-cart] **go-kart** which has not been started on the starting apron may not be pushed on to the track proper but must be returned to the pit area or to the rear of the starting apron. No person may enter the race course for the purpose of starting a stalled car while any race or exhibition is in progress.

23. [Safety helmets shall be worn by all participants as set forth in N.J.A.C. 13:62-4.20(a).] **All drivers shall wear a helmet in condition which meets or exceeds the American National Standard Institute (A.N.S.I.) Z-90.1 testing standard.**

13:62-8.4 Serpentine [go-cart] **go-kart** road course

(a) When a [go-cart] **go-kart** race course has been designed with winding or serpentine roadway, for the purpose of reducing the overall speed of the [go-carts] **go-karts**, the following rules apply:

1.-6. (No change.)

13:62-8.5 Track construction

(a) Construction of hubrails, fences and other safety devices for go-kart events must comply in all respects with provisions of this subchapter.

(b) The hubrail construction for go-kart events shall be the same as the hubrail construction used for motorcycle events in that planks made of marine plywood three-quarters inches thick and 12 inches wide made be used.

(c) The licensee shall erect along any part of the track where spectators are permitted, whether outside of the track or in the infield, in addition to the hubrail, a fence six feet in height and located not less than four feet from the edge of the track.

13:62-8.6 Clothing requirements for all go-kart events

Drivers shall wear safety clothing to afford maximum protection to the driver according to industry standards. It is recommended that this clothing be of a fire retardant material.

13:62-8.7 Pit area operation prohibition

No go-karts shall be operated under power in the pit area.

SUBCHAPTER 9. DEMOLITION DERBY AND TRACTOR PULLS

13:62-9.2 Demolition derby participants

(a)-(b) (No change.)

(c) [All drivers must wear a safety belt and approved safety helmet as set forth in N.J.A.C. 13:62-4.20 while participating in an event.] **All drivers shall wear a helmet in condition which meets or exceeds the American National Standard Institute (A.N.S.I.) Z-90.1 testing standard.**

[13:62-9.3 Demolition derby exhibition area

(a) The demolition derby exhibition area shall be no more than 250 feet wide with a depth of 100 feet.

(b) The outer edge of the exhibition area shall be marked with poles or similar devices so as to contain the participants vehicles.

(c) No one shall be allowed within this area except track officials and participants.

(d) If mechanics or newsmen are allowed in the infield portion, a suitable fence shall be erected 50 feet from the outer edge of the exhibition area.

(e) Spectators shall not be permitted within infield portions of the exhibition area unless protected by a fence of at least 6 feet in height erected no closer than 50 feet from the outer edge of the exhibition area.]

13:62-9.3 Goggles or face shield

The driver of all vehicles not equipped with windshields shall wear windproof, shatterproof goggles or a face shield of the type which meets or exceeds U.S.A. standard Specifications for Head, Eye and Respiratory Protection Z2.1-1959 testing standard.

[13:62-9.4 Demolition derby tow vehicles

(a) Tow vehicles shall be permitted to enter the demolition derby exhibition area for vehicle removal.

(b) There shall be no more than two persons per tow vehicle.

(c) No riders shall be permitted on outside of tow vehicle.]

13:62-9.4 Clothing requirements

Drivers shall wear safety clothing to afford maximum protection to the driver according to industry standards. It is recommended that this clothing be of a fire retardant material.

[13:62-9.5 Tractor pull age requirement

All competitors, working personnel and officials of a tractor pull event having access to the pit area or racing surface must be at least 18 years of age.]

13:62-9.5 Demolition derby exhibition area

(a) The demolition derby exhibition area shall be no more than 250 feet and of 100 feet deep.

(b) The outer edge of the exhibition area shall be marked with poles or similar devices so as to contain the participating vehicles.

(c) No one shall be allowed within this area except track officials and participants.

(d) If mechanics or members of the press are allowed in the infield portion, a suitable fence shall be erected 50 feet from the outer edge of the exhibition area.

(e) Spectators are prohibited within infield portions of the exhibition area unless protected by a fence of at least six feet in height erected no closer than 50 feet from the outer edge of the exhibition area.

[13:62-9.6 Tractor pull kill switch requirement

All vehicles competing in a tractor pull event shall be equipped with a kill switch in operating order.]

You're viewing an archived copy from the New Jersey State Library.

13:62-9.6 Demolition derby tow vehicles

(a) Tow vehicles shall be permitted to enter the demolition derby exhibition area for vehicle removal.

(b) There shall be no more than two persons per tow vehicle.

(c) No riders shall be permitted on the outside of the tow vehicle.

13:62-9.7 Tractor pull age requirement

All competitors, working personnel and officials of a tractor pull event having access to the pit area or racing surface shall be at least 18 years of age.

13:62-9.8 Tractor pull kill switch requirement

All vehicles competing in a tractor pull event shall be equipped with a kill switch in operating order.

13:62-9.9 Speed limits

All vehicles traveling in the pit area or staging area shall obey a five miles per hour speed limit.

13:62-9.10 Licensed facilities

Demolition derby and tractor pull events shall only take place in licensed facilities.

SUBCHAPTER 10. AUTOMOBILE ENDURO EVENTS

13:62-10.1 Construction requirements

(a) Hubrail construction shall comply in all respects with the requirements of this chapter.

(b) The licensee shall provide and maintain hubrails on the outer circumference of the track and around the entire circumference thereof. Where spectators are allowed in the infield or within the inner circumference of the track, the licensee shall provide and maintain a hubrail, as described in this section, around the inner circumference of the track.

(c) The hubrail shall consist of at least two planks of hard wood or other suitable materials, at least 10 inches in width by three inches in thickness.

(d) The hubrail shall be supported by posts of similar material of at least six inches in width and six inches in thickness or round posts not less than seven inches in diameter, which are set in the ground at least four feet and shall extend above the ground at least two feet. The post shall be no higher than the hubrail planking and shall be spaced no more than six feet apart.

(e) Two planks of hardwood or other suitable material shall be mounted on the side of the post facing the track and running horizontally and parallel to each other.

(f) On the opposite side of the posts, not more than eight inches from the top thereof, there shall be a ¾ inch steel cable running around the circumference of the track and securely fastened to the post with eye bolts.

(g) The hubrail entrance and exit gates to the pit area shall be closed while vehicles are in motion on the track, unless alternate arrangements have been made by the installation of barriers of a type which will prevent cars out of control from leaving the track and entering the immediate pit working area.

(h) Where the licensee wishes to use methods other than gates, an inspection of such installations by a representative of the Superintendent is required.

(i) The hubrail opening for vehicles shall be so located that a vehicle leaving the track must turn 90 degrees before entering the pit area.

(j) At locations using methods other than gates between the pit area and the track, the licensee shall provide a guard to prevent unauthorized persons from entering the track area.

(k) The use of baled hay or straw or any similar material as a protective device between participating vehicles and spectators is specifically prohibited.

13:62-10.2 Fences

All fences installed for the purpose of limiting spectator areas shall be constructed of welded wire fabric or chain link and shall be at least six feet in height and so constructed as not to be easily lifted, climbed over or moved aside, except at motocross events the fence shall be of the same construction but at least five feet in height.

13:62-10.3 Red and amber lights

(a) Each track used for automotive racing, except those used for acceleration and performance tests, shall be equipped with a system of at least four red lights and four amber lights so arranged that at least one light of each color will be visible to the drivers as they enter each turn.

(b) The lights shall be controlled by a single switch. The licensee shall provide a responsible person to operate such switch during the entire time of each race.

(c) When the red lights are illuminated, all racing vehicles on the track shall stop as soon as possible and remain stopped until such time as the red lights are turned out.

(d) When the amber lights are illuminated, all racing vehicles on the track shall slow down and maintain their position unless otherwise directed to change position by a track official.

13:62-10.4 Flagmen

(a) On tracks over one mile in length, licensees may use flagmen in lieu of the red and amber lights, provided the assistant flagman in the starter's stand is in constant two-way radio or telephone communication with all flagmen.

(b) On display of the red flag, all racing vehicles shall stop as soon as possible and remain stopped until such time as the red flag is removed from display.

(c) On display of the amber flag, all racing vehicles shall slow down and maintain their position unless directed to change their position by a track official.

13:62-10.5 Starters

(a) The licensee shall provide starter(s) located within a starter's stand with an unobscured view of the entire racing surface from which to control the racing event.

(b) All circular or oval tracks, road courses and other locations utilizing the services of flagmen to control the event shall also have an assistant flagman in the starter's stand. The assistant flagman used to control or start a race shall be in the starter's stand when starting and during the race.

13:62-10.6 Maximum protection

(a) All hubrails, fences, stands and buildings shall be constructed and maintained so as to afford maximum protection for spectators.

(b) Any spectator stand erected or relocated on or after April 1, 1960, must be located at least 25 feet from the hubrail.

13:62-10.7 Driver and vehicle requirements

(a) All drivers in enduro events shall be at least 18 years of age and possess a driver's license. The licensee shall check the license for validity.

(b) All drivers shall wear a helmet in condition which meets or exceeds the American National Standard Institute (A.N.S.I.) Z-90.1 testing standard.

(c) The driver of all vehicles shall wear windproof, shatterproof goggles or a face shield of the type which meets or exceeds U.S.A. standard Specifications for Head, Eye and Respiratory Protection Z2.1-1959 testing standard.

(d) All drivers in enduro events shall wear fire retardant suits. Fire retardant underwear is recommended.

(e) All drivers are required to wear fire resistant gloves.

(f) All drivers are required to wear fire resistant shoes and it is recommended that fire resistant socks be worn.

(g) No driver shall compete with head or arm extended outside of the doors or windows.

(h) A driver shall remain with the vehicle if it is disabled during the race, except that:

1. During a red light or red flag, the driver may exit the vehicle and return to the pit area at direction of track personnel.

2. Racing should be stopped (red flagged) at 15-minute intervals to allow drivers to exit to pit area. The time intervals may be extended if no disabled vehicles are located on the track.

(i) Each vehicle shall have a minimum 104-inch wheelbase.

(j) Convertibles, pickup trucks, station wagons, or vans are prohibited in enduro events.

You're viewing an archived copy from the New Jersey State Library.

13:62-10.8 Windshield

(a) The originally installed windshield may remain but all other glass must be completely removed from a participating vehicle.

(b) Window net or screen shall be securely installed on the driver's side.

13:62-10.9 Mirrors

Inside rear view mirrors are permitted. Outside view mirrors are prohibited.

13:62-10.10 Vehicle interior and exterior requirements

(a) Chrome and nonmetallic trim shall be removed from sides of the vehicle.

(b) Passenger seats shall be removed from the interior of the vehicle.

(c) A safety hub or reinforced wheel is required on the vehicle's right front wheel.

(d) All doors shall be bolted, chained or welded closed. Any door opening during an event shall constitute automatic disqualification.

(e) The exterior of the driver's side door shall have at least one metal brace at bumper height.

(f) All vehicles shall retain stock appearance with no alterations to fenders or wheel wells.

13:62-10.11 Tires

(a) Passenger tires with United States Department of Transportation numbers shall be allowed with a maximum tread width of seven inches.

(b) Studs or "cheater-slicks" are prohibited.

(c) Wheel rim width shall not exceed seven inches.

13:62-10.12 Fuel tanks

(a) Except as set forth in (b) below, vehicles using a self-contained fuel cell with an inner rubber bladder shall bolt the self-contained fuel cell to the frame of the vehicle utilizing an "x" type frame work under the cell. At least three one inch metal straps ¼ inch thick shall be bolted to the frame of the vehicle by at least two ⅜ inch three line bolts and angled to go around the cell, except for the bottom, to apply maximum pressure against the tank to the frame.

(b) Vehicles with limited space shall have the fuel cell secured by four one inch metal straps, ¼ inch thick, bolted to the frame of the vehicle by at least two ⅜ inch three line bolts and angled to go entirely around the cell to apply maximum pressure against the fuel tank.

(c) A conventional type fuel tank shall be bolted within the frame of the vehicle.

(d) A reinforcing member of the same kind and size material as that used in the roll cage of the chassis shall be installed to the rear of the fuel tank joining the rearmost portion of the chassis.

(e) A vehicle utilizing a fuel tank mounted to the front of the front fire wall shall have a reinforcing member of the same kind of material as that used in the roll cage or chassis, installed in such a manner as to afford maximum protection to the tank.

(f) A metal fire wall shall be installed between the fuel tank and driver's compartment to afford the driver maximum protection.

13:62-10.13 Fuel lines

Fuel lines shall not pass through the passenger compartment of the vehicle.

13:62-10.14 Engine and suspension requirements

(a) The engine shall remain stock with a factory installed carburetor and manifold.

(b) Altering of suspension or torching of springs is prohibited.

13:62-10.15 Seat belts

(a) A shoulder harness and four point racing lap belt in good working condition shall be installed and properly worn during the event.

(b) A lap belt and shoulder harness installed in a position other than manufacturer's shall be affixed to the outer floor utilizing four inch by four inch steel plate and bolts of adequate tempered steel strength.

13:62-10.16 Bumpers

All vehicles shall be equipped with stock bumpers securely fastened on the front and rear. Outside bracing of bumpers is prohibited.

13:62-10.17 Batteries

(a) Batteries shall be properly secured as follows:

1. Batteries located in the driver compartment shall be shielded to prevent leakage in the event of damage or turnover.

2. Batteries located adjacent to the fuel supply of the vehicle shall be secured in a metal box bolted to the frame of the vehicle by at least four ⅜ inch three line bolts and in such a manner to apply maximum pressure against the metal box to the frame. The battery shall also have a marine box cover secured to the top of the metal box as to not allow any movement of the battery.

3. Batteries located in any other area not specified in (a)1 and 2 above shall be shielded to prevent leakage in the event of damage or turnover.

13:62-10.18 Seats

(a) A factory installed front seat shall be utilized provided it is equipped with a headrest.

(b) Seats shall be attached to the main frame of the vehicle, the frame of the roll cage or to a substantial metal plate utilizing a minimum of six, three line, 5/16 inch bolts.

(c) The base of the seat shall be installed with four 5/16 inch bolts not more than three inches from the outer edge at the four most practical points.

(d) Two bolts shall be installed at the two most practical points at the top of the back of the seat and a metal strap of at least two inches in width and ⅛ inch thick shall connect every two bolts.

13:62-10.19 Rollover cage

(a) All race cars shall be equipped with a rollover cage surrounding the driver of a design, construction and quality affording the driver maximum protection against injury.

(b) Rollover bars installed in vehicle shall be a minimum of three inches above and six inches behind the driver's head.

(c) The outside diameter of the rollover bars shall be a minimum of one and three-quarters inch and wall thickness a minimum of .09 inch.

(d) Rollover bars welded, bolted or fastened to the flooring shall utilize a six inch by six inch by one-quarter inch base plate.

(e) Vehicles having uni-body construction may install a rollover bar welded to the frame of the vehicle utilizing six inch by six inch by one-quarter inch base plate affixed to outer flooring.

(f) Rollover bars shall be plainly visible with the exception of built-in or integral rollover bars.

(g) Vehicles with built-in or integral rollover bars shall maintain and provide upon request by the Superintendent or designee the manufacturer's detailed drawing establishing the dimensions and material utilized.

13:62-10.20 Miscellaneous equipment requirements

(a) The drive shaft loop shall be installed not more than 24 inches from the front and rear yokes of the vehicle.

(b) All vehicles shall have an opening in the hood to properly expose the carburetor.

(c) The radiator shall remain in the manufacturer's position. Any movement of the radiator is prohibited.

(d) The front and rear trunk lid shall remain securely fastened with cable or chain throughout the entire event. Any incidental opening shall disqualify the vehicle from the event.

(e) Outer decorations on the vehicle utilizing poles, flags, staffs or other hazardous protuberances are prohibited.

(f) Transmission and radiator cooling cores located inside the vehicle are prohibited.

13:62-10.21 Additional track responsibilities

(a) The licensee shall maintain safe conditions during all pit stops.

(b) The licensee shall insure that disabled vehicles are left at the point of disablement.

You're viewing an archived copy from the New Jersey State Library.

(c) The licensee shall maintain adequate fire apparatus on location during the event, including:

1. A fire vehicle with a minimum of 300 pounds of dry chemical then meets the National Fire Protection Association standards of a mini pumper;

2. Twenty-pound fire extinguishers, at a minimum, with a minimum of 10 B.C. rating shall be maintained on location during an event; and

3. A minimum of two sets of protective turn-out gear shall be available to track personnel.

13:62-10.22 Speed limits

All vehicles traveling in the pit area or staging area must obey a five miles per hour speed limit.

13:62-10.23 Licensed facilities

Automobile enduro events shall only take place in licensed facilities.

SUBCHAPTER 11. MUD HOP

13:62-11.1 Construction requirements

(a) Hubrail construction shall comply in all respects with the requirements of this chapter.

(b) The licensee shall provide and maintain hubrails on the outer circumference of the track and around the entire circumference thereof. Where spectators are allowed in the infield or within the inner circumference of the track, the licensee shall provide and maintain a hubrail, as described in this section, around the inner circumference of the track.

(c) The hubrail shall consist of at least two planks of hard wood or other suitable materials, at least 10 inches in width by three inches in thickness.

(d) The hubrail shall be supported by posts of similar material of at least six inches in width and six inches in thickness or round posts not less than seven inches in diameter, which are set in the ground at least four feet and shall extend above the ground at least two feet. The post shall be no higher than the hubrail planking and shall be spaced no more than six feet apart.

(e) Two planks of hardwood or other suitable material shall be mounted on the side of the post facing the track and running horizontally and parallel to each other.

(f) On the opposite side of the posts, not more than eight inches from the top thereof, there shall be a ¾ inch steel cable running around the circumference of the track and securely fastened to the post with eye bolts.

(g) The hubrail entrance and exit gates to the pit area shall be closed while vehicles are in motion on the track, unless alternate arrangements have been made by the installation of barriers of a type which will prevent cars out of control from leaving the track and entering the immediate pit working area.

(h) Where the licensee wishes to use methods other than gates, an inspection of such installations by a representative of the Superintendent is required.

(i) The hubrail opening for vehicles shall be so located that a vehicle leaving the track must turn 90 degrees before entering the pit area.

(j) At locations using methods other than gates between the pit area and the track, the licensee shall provide a guard to prevent unauthorized persons from entering the track area.

(k) The use of baled hay or straw or any similar material as a protective device between participating vehicles and spectators is specifically prohibited.

13:62-11.2 Fences

All fences installed for the purpose of limiting spectator areas shall be constructed of welded wire fabric or chain link and shall be at least six feet in height and so constructed as not to be easily lifted, climbed over or moved aside, except at motocross events the fence shall be of the same construction but at least five feet in height.

13:62-11.3 Red and amber lights

(a) Each track used for automotive racing, except those used for acceleration and performance tests, shall be equipped with a system of at least four red lights and four amber lights so arranged that at least one light of each color will be visible to the drivers as they enter each turn.

(b) The lights shall be controlled by a single switch. The licensee shall provide a responsible person to operate such switch during the entire time of each race.

(c) When the red lights are illuminated, all racing vehicles on the track shall stop as soon as possible and remain stopped until such time as the red lights are turned out.

(d) When the amber lights are illuminated, all racing vehicles on the track shall slow down and maintain their position unless otherwise directed to change position by a track official.

13:62-11.4 Flagmen

(a) Licensees of tracks over one mile in length may use flagmen in lieu of the red and amber lights, provided the assistant flagman in the starter's stand is in constant two-way radio or telephone communication with all flagmen.

(b) On display of the red flag, all racing vehicles shall stop as soon as possible and remain stopped until such time as the red flag is removed from display.

(c) On display of the amber flag all racing vehicles shall slow down and maintain their position unless directed to change position by a track official.

13:62-11.5 Starters

(a) The licensee shall provide a starter(s) located within a starter's stand with an unobscured view of the entire racing surface from which to control the racing event.

(b) At all circular or oval tracks, road courses and other locations utilizing the services of flagmen to control the event, the licensee shall also have an assistant flagman in the starter's stand. The assistant flagman used to control or start a race shall be in the starter's stand when starting and during the race.

13:62-11.6 Maximum protection

(a) All hubrails, fences, stands and buildings shall be constructed and maintained so as to afford maximum protection for spectators.

(b) Any spectator stand erected or relocated on or after April 1, 1960, must be located at least 25 feet from the hubrail.

13:62-11.7 Licensed facilities

Mud hop events shall only be conducted at licensed facilities.

13:62-11.8 Alcohol/controlled dangerous substances prohibited

No alcohol or controlled dangerous substances shall be permitted within the pit area. Anyone departing the pit area shall be prohibited from returning during the duration of the event if the individual has consumed alcohol or a controlled dangerous substance.

13:62-11.9 Driver requirements

(a) Mud hop drivers shall be a minimum 18 years of age and in possess a valid driver's license from the driver's state of residence.

(b) The driver's license number shall be recorded on an entry form and checked by the licensee for validity.

(c) The driver shall remain with a disabled vehicle until properly escorted from the racing track.

13:62-11.10 Equipment requirements

(a) All drivers shall wear a helmet in condition which meets or exceeds the American National Standard Institute (A.N.S.I.) Z-90.1 testing standard.

(b) The driver of all vehicles shall wear windproof, shatterproof goggles or a face shield of the type which meets or exceeds U.S.A. standard Specifications for Head, Eye and Respiratory Protection Z2.1-1959 testing standard.

(c) Drivers shall be attired in a shirt, long pants and shoes, at a minimum. It is recommended that this clothing be of a fire retardant material.

(d) The extension of the driver's head or arm outside the vehicle is prohibited.

You're viewing an archived copy from the New Jersey State Library.

13:62-11.11 Windows

(a) The windshield of the participating vehicle may remain as originally installed.

(b) Heavy mesh screening with a metal post covering the entire opening or plexiglass with a center post shall be utilized where the original windshield is removed.

13:62-11.12 Vehicle interior and exterior requirements

(a) Sharp edges created by accidental vehicle contact shall be folded over to render the vehicle safe.

(b) Alterations to the fenders or wheel wells are prohibited on stock vehicles.

(c) All doors of participating vehicles shall remain closed during an event. Any opening shall constitute automatic disqualification.

13:62-11.13 Seat belts

(a) Seat belts are required and shall be properly worn during the event.

(b) A racing lap belt and shoulder harness shall be installed and utilized on any modified vehicle, provided it is:

1. Approved through the licensee's technical inspection and found to be in good condition; and

2. Securely affixed to the outer flooring and reinforced by a four inch by four inch steel plate and bolts of adequate tempered steel strength.

(c) Cable, chain or straps securing devices for seat belts are prohibited.

13:62-11.14 Rollover cage

(a) Open cab vehicles shall be equipped with rollover cage surrounding the driver of a design, construction and quality affording the driver maximum protection against injury.

(b) Rollover bars installed in vehicle shall be a minimum of three inches above and six inches behind the driver's head.

(c) Rollover bars shall be a minimum of 1¾ inch outside diameter with a wall thickness of a minimum of .09 inch.

(d) Rollover bars welded, bolted or fastened to the flooring shall utilize a six inch by six inch by ¼ inch base plate.

(e) Vehicles having uni-body construction may have a rollover bar welded to the frame of the vehicle utilizing six inch by six inch by ¼ inch base plate affixed to the outer flooring.

(f) Rollover bars shall be plainly visible with the exception of built-in or integral rollover bars.

(g) Owners of vehicles with built-in or integral rollover bars shall maintain and provide upon request by the Superintendent or designee the manufacturer's detail drawing establishing the dimensions and material utilized.

13:62-11.15 Bumpers

All vehicles shall be equipped with bumpers securely fastened on the front and rear. Outside bracing of bumpers shall be prohibited.

13:62-11.16 Batteries

(a) Batteries shall be properly secured as follows:

1. Batteries located in the driver compartment shall be shielded to prevent leakage in the event of damage or turnover.

2. Batteries located adjacent to the fuel supply of the vehicle must be secured in a metal box bolted to the frame of the vehicle by at least four ⅜ inch three line bolts to apply maximum pressure against the metal box to the frame. The battery shall also have a marine box cover secured to the top of the metal box as to not allow any movement of the battery.

3. Batteries shall not be located within the driver's compartment.

4. Batteries located in any other area not specified in (a)1 and 2 above shall be shielded to prevent leakage in the event of damage or turnover.

13:62-11.17 Miscellaneous equipment requirements

(a) The drive shaft loop shall be installed not more than 24 inches from the front and rear yokes of modified vehicles.

(b) The radiator, if moved from the manufacturer's position, shall be shielded from the driver by a firewall.

(c) The front and rear trunk lid shall remain securely fastened with cable or chain throughout the entire event. Any incidental opening shall disqualify the vehicle from the event.

(d) Outer decorations on the vehicle utilizing poles, flags, staffs or other hazardous protuberances are prohibited.

(e) Transmission and radiator cooling lines or cooling cores shall be equipped with a metal fire wall separating the driver for maximum security.

(f) Tow hooks or tow bars shall be installed and secured to the frame of the vehicle.

(g) No vehicle shall transport more than one person at any time during an event or warm-up.

13:62-11.18 Braking system and pedal reserve

(a) The licensee shall test and approve each vehicle for break pedal reserve prior to the vehicle departing the pit area.

(b) No vehicle shall be permitted to participate in any event if the braking system includes a direct application of pressure to any of the tires or any apparent deficiencies.

13:62-11.19 Automatic transmission safety mats

Any modified vehicle with an automatic transmission shall have a steel mat, plate, or blanket installed over the transmission so as to protect the driver from injury caused by the fragmentation of the automatic transmission upon explosion.

13:62-11.20 Seats

(a) A factory installed front seat may be utilized provided it is equipped with a headrest.

(b) Seats shall be attached to the main frame of the vehicle, the frame of the roll cage or to a substantial metal plate utilizing a minimum of six, three line, five-sixteenths inch bolts.

(c) The base of the seat shall be installed with four five-sixteenths inch bolts not more than three inches from the outside edge of the four most practical points.

(d) Two bolts shall be installed at the two most practical points at the top of the back of the seat and a metal strap of at least two inches in width and one-eighth inch in thickness shall connect every two bolts.

13:62-11.21 Additional track responsibilities

(a) The licensee shall maintain safe conditions during all pit stops.

(b) The licensee shall maintain adequate fire apparatus on location during the event, including:

1. A fire vehicle that meets the National Fire Protection Associations standards of a mini pumper;

2. Twenty-pound fire extinguishers, at a minimum, with a minimum of 10 B.C. rating on location during an event; and

3. A minimum of two protective turn out gear shall be available to track personnel.

13:62-11.22 Speed limits

All vehicles traveling in the pit area or staging area must obey a five miles per hour speed limit.

13:62-11.23 Licensed facilities

Mud hop events shall only take place in licensed facilities.

SUBCHAPTER 12A. QUARTER MIDGETS EVENTS

13:62-12A.1 Licensed facilities

Quarter midget events shall only take place in licensed facilities.

13:62-12A.2 Track construction

(a) Construction of hubrails, fences and other safety devices for quarter midget events shall comply in all respects with provisions of this subchapter.

(b) The hubrail construction for quarter midget events shall be the same as the hubrail construction used for go-kart and motorcycle events in that planks made of marine plywood three-quarter inches thick and 12 inches wide may be used.

(c) The licensee shall erect along any part of the track where spectators are permitted, in addition to the hubrail, a fence six feet

You're viewing an archived copy from the New Jersey State Library.

in height and located not less than four feet from the edge of the track.

13:62-12A.3 Safety requirements

(a) Quarter midgets and persons participating in races or exhibitions of driving skill on any track or facility licensed by the Superintendent shall comply with the following requirements.

1. No person under the age of five years of age may operate a quarter midget in any race or exhibition of driving skills.

2. All quarter midget vehicles shall adhere to the rules and regulations governing quarter midget vehicles in the "Quarter Midgets of America" 1990-1991 racing rules and specifications directory which are incorporated herein by reference. A copy of these rules can be obtained by contacting the Quarter Midgets of America, 6118 E. 19th Street, Tulsa, OK 74112.

i. On written request of a licensee, the Superintendent may approve any revisions or amendments by the Quarter Midgets of America. Approval of such request shall be reflected in a proposed amendment to this chapter.

3. No repairs shall be made on any quarter midget during the course of a race unless the vehicle is removed to the pit area.

4. A starting apron shall be provided where the quarter midgets are to be started. Persons shall not enter the race course to push a quarter midget. A quarter midget which has not been started on the starting apron shall not be pushed on to the track proper but shall return to the pit area or to the rear of the starting apron. No person shall enter the race course for the purpose of starting a stalled quarter midget while any race or exhibition is in progress.

5. All drivers shall wear a helmet in condition which meets or exceeds the American National Standard Institute (A.N.S.I.) Z-90.1 testing standard.

6. The driver of all vehicles shall wear windproof, shatterproof goggles or a face shield of the type which meets or exceeds U.S.A. standard Specifications for Head, Eye and Respiratory Protection Z2.1-1959 testing standard.

7. All participants shall remain inside the cockpit of the quarter midgets while the vehicle's engine is running. The participant shall not be permitted to race (black flagged) if the participant leans outside of the quarter midgets for any reason whatsoever.

8. All quarter midget vehicles shall be equipped with an additional external engine shut off switch placed on the top of the roll bar to shut off the vehicles engine in case of emergency.

13:62-12A.4 Speed limits for all quarter midget events; pit area operation prohibition

(a) No quarter midget vehicle shall exceed the speed of 30 miles per hour during a race, exhibition, or performance test of any kind.

(b) No quarter midget shall be operated under power in the pit area.

SUBCHAPTER 12B. JUNIOR DRAG RACING EVENTS

13:62-12B.1 Licensed facilities

Junior drag racing events shall only take place in licensed facilities.

13:62-12B.2 Construction requirements

(a) Hubrail construction shall comply in all respects with the requirements of this subchapter.

(b) The licensee shall provide and maintain hubrails on the outer area of the track and around the entire area thereof. Where spectators are allowed in the return road or within the inner area of the track, the licensee shall provide and maintain a hubrail, as described in this section, around the inner area of the track.

(c) The hubrail shall consist of at least two planks of hard wood or other suitable materials, at least 10 inches in width by three inches in thickness.

(d) The hubrail shall be supported by posts of similar material of at least six inches in width and six inches in thickness or round posts not less than seven inches in diameter, which are set in the ground at least four feet and shall extend above the ground at least two feet. The post shall be no higher than the hubrail planking and shall be spaced no more than six feet apart.

(e) Two planks of hardwood or other suitable material shall be mounted on the side of the post facing the track and running horizontally and parallel to each other.

(f) On the opposite side of the posts, not more than eight inches from the top thereof, there shall be a ¾ inch steel cable running around the circumference of the track and securely fastened to the post with eye bolts.

(g) The hubrail entrance and exit gates to the pit area shall be closed while vehicles are in motion on the track, unless alternate arrangements have been made by the installation of barriers of a type which will prevent cars out of control from leaving the track and entering the immediate pit working area.

(h) Where the licensee wishes to use methods other than gates, an inspection of such installations by a representative of the Superintendent is required.

(i) The hubrail opening for vehicles shall be so located that a vehicle leaving the track must turn 90 degrees before entering the pit area.

(j) At locations using methods other than gates between the pit area and the track, the licensee shall provide a guard to prevent unauthorized persons from entering the track area.

(k) The use of baled hay or straw or any similar material as a protective device between participating vehicles and spectators is specifically prohibited.

13:62-12B.3 Fences

All fences installed for the purpose of limiting spectator areas shall be constructed of welded wire fabric or chain link and shall be at least six feet in height and so constructed as not to be easily lifted, climbed over or moved aside, except at motocross events the fence shall be of the same construction but at least five feet in height.

13:62-12B.4 Starting tree lights

(a) Strips used for acceleration and performance tests need be equipped with only one red light on the starting tree.

(b) The lights shall be controlled by a single switch. The licensee shall provide a responsible person to operate such switch during the entire time of each race.

13:62-12B.5 Starters

(a) The licensee shall provide starter(s) located within a starter's area with an unobscured view of the entire racing surface from which to control the racing event.

13:62-12B.6 Maximum protection

(a) All hubrails, fences, stands and buildings shall be constructed and maintained so as to afford maximum protection for spectators.

(b) Any spectator stand erected or relocated on or after April 1, 1960, must be located at least 25 feet from the hubrail.

13:62-12B.7 Location

(a) A location approved for acceleration and performance tests shall provide for a stopping distance at least equal to the acceleration and timing distance.

(b) The acceleration area shall not exceed 660 feet.

(c) The entire racing strip, including the deceleration area, shall be paved.

(d) The end of the acceleration area may be marked by an overhead banner, provided the supports are of such construction that they will not present a hazard to the vehicles. The height of the banner shall be at least 14 feet above the surface of the strip.

(e) All junior dragsters shall only compete utilizing the ⅛ of a mile track surface.

13:62-12B.8 Vehicle equipment and driver requirements

(a) Junior drag racers and personnel participating in races or exhibitions of driving skill on any track or facility licensed by the Superintendent shall comply with the following requirements:

1. No person under the age of eight years of age may operate a junior dragster in any race or exhibition of driving skill.

2. All junior dragster vehicles shall adhere to the rules and regulations governing junior drag racing vehicles as written in the "The NHRA Junior Dragracing League" 1993 Supplemental Program (Technical & Competition Guidelines) racing rules and

You're viewing an archived copy from the New Jersey State Library.

specifications which are incorporated herein by reference. A copy of these rules can be obtained by contacting the N.H.R.A. Technical Department, 2035 Financial Way, Glendora, CA 91740.

i. On written request of a licensee the Superintendent may approve any revisions or amendments by the NHRA Junior Dragracing league. Approval of such request shall be reflected in a proposed amendment to this chapter.

3. No repairs shall be made on any junior drag racer during the course of a race unless the vehicle is removed to the pit area.

4. Persons shall not enter the race course to push a junior drag vehicle. A junior drag vehicle which has not been started on the starting area shall not be pushed on to the track proper but must return to the pit area or to the rear of the starting line. No person shall enter the race course for the purpose of starting a stalled junior drag vehicle while any race or exhibition is in progress.

5. All drivers shall wear a helmet in condition which meets or exceeds the American National Standard Institute (A.N.S.I.) Z-90.1 testing standard.

6. The driver of all vehicles shall wear windproof, shatterproof goggles or a face shield of the type which meets or exceeds U.S.A. standard Specifications for Head, Eye and Respiratory Protection Z2.1-1959 testing standard.

7. All participants shall remain inside the cockpit of the junior dragster while the vehicle's engine is running.

8. All junior dragster vehicles shall be equipped with an additional external engine shut off switch on top of the roll bar to shut off the vehicles engine in case of emergency.

13:62-12B.9 Speed limits for all junior dragster events; pit area operation prohibition

(a) No junior dragster vehicle shall exceed the speed of 60 miles per hour during a race, exhibition, or performance test of any kind.

(b) No junior dragster shall be operated under power in the pit area.

SUBCHAPTER 13. ADVISORY COMMITTEE

13:62-13.1 Appointment of advisory committee

(a) The Superintendent may appoint a civilian advisory committee in order to assist the Superintendent or his or her designee with questions that may arise pertaining to the auto racing field.

(b) These civilian advisors will have knowledge of the racing industry and will be appointed in a voluntary capacity.

(c) All members being considered for the position as an advisory committee member shall complete an application and be required to undergo a background investigation as a prerequisite for appointment.

SUBCHAPTER 14. SPECIAL AGE PROVISION

13:62-14.1 Participant requirements

(a) Notwithstanding any other provision of this chapter to the contrary, a person between the ages of 10 and 18 years of age shall be permitted to participate in go-kart, snowmobile, and motocross events providing the following conditions are met:

1. The participant between the ages 10 and 18 is covered by accidental death and dismemberment insurance in an amount not less than $10,000 for accidental death and $3,000 for dismemberment; and

2. The participant between the ages of 10 and 18 shall be required to furnish proof of successful completion of an operational and safety course for the particular vehicle which the participant desires to operate.

13:62-14.2 Licensee responsibilities

(a) The licensee shall ensure that all conditions set forth in this chapter are met prior to permitting an individual to participate in any event.

(b) The licensee shall ensure that the operation of vehicles covered by this subchapter by persons between the ages of 14 and 18 shall be restricted to the confines of an approved race or exhibition area and adjoining pit area.

SUBCHAPTER 15. ACTIONS FOR VIOLATION(S)

13:62-15.1 Actions for violations

(a) The Superintendent or designee may stop a racing event if any portion of this chapter is violated and participants, spectators or track employees are at unreasonable risk for their safety.

(b) The race event shall be permitted to resume if the violation is corrected within a responsible amount of time.

SUBCHAPTER 16. APPEALS OF ADMINISTRATIVE ACTION

13:62-16.1 Hearings

(a) In the case of the suspension, denial or refusal to renew a license, the Superintendent shall notify the applicant or licensee in writing of such action and the reasons for the action.

(b) A licensee or applicant may request a hearing to appeal the action of the Superintendent. A request for a hearing of the Superintendent's action shall be made in writing to the Superintendent within 15 days from the receipt of the notice.

(c) If a request for a hearing is timely received, the Superintendent shall take the appropriate action in accordance with the provisions of the Administrative Procedures Act, N.J.S.A. 52:14B-1 et seq. and the Uniform Administrative Rules of Practice, N.J.A.C. 1:1.

(a)

NEW JERSEY RACING COMMISSION

Thoroughbred Rules

Coupled Horses; Limitation of Entries by Trainers

Proposed Amendment: N.J.A.C. 13:70-6.5

Proposed New Rule: N.J.A.C. 13:70-6.58

Authorized By: New Jersey Racing Commission, Frank Zanzuccki, Executive Director.

Authority: N.J.S.A. 5:5-30.

Proposal Number: PRN 1995-78.

Submit written comments by March 8, 1995 to:
Frank Zanzuccki, Executive Director
New Jersey Racing Commission
CN 088
Trenton, New Jersey 08625

The agency proposal follows:

Summary

The Racing Commission is interested in obtaining public comment on three alternative proposed amendments concerning the uncoupling of horses that are trained by the same trainer but owned by separate interests. The Commission determined to advertise for public comment alternative amendments to N.J.A.C. 13:70-6.5 and proposed new rule N.J.A.C. 13:70-6.58. The Commission may adopt Alternative No. 1 or No. 2 as an amendment to the existing rule and may adopt new rule Alternative No. 3 without change to the existing rules or in conjunction with amendments proposed in Alternatives No. 1 or No. 2. Comments may address any or all of the proposed alternatives.

According to the existing rules, racetracks may request approval from the Commission to uncouple horses and allow them to race as separate wagering interests when a trainer enters two or more horses in a stake, handicap, futurity or other special event under bonafide separate ownership. Over the years the Commission, through its staff, has routinely approved these requests provided they were consistent with the regulation. Recent situations have occurred where a trainer has had as many as six horses entered in a race in which approval was granted to race as separate wagering interests. This decision resulted in negative comment from patrons citing difficulty in determining which one of the six horses trained by the same trainer was most likely to win. Had the Commission denied the request of the racetrack to uncouple these horses the patron would not have to make that type of decision. The horses would have remained coupled and a wager on one would have the effect as a wager on all horses so coupled. In reviewing these concerns the Commission has determined that the integrity of the race was being

You're viewing an archived copy from the New Jersey State Library.

called into question by these patrons. Due to the seriousness of these questions and the Commission's overriding concern for integrity issues, alternative proposals are made to address these concerns.

Alternative No. 1 would eliminate the provision allowing racetracks to request exceptions to the coupling rule thereby requiring all horses to race as a single wagering interest regardless of whether the horses are competing in a stake, futurity, handicap or other special event.

Racetracks make requests to uncouple horses consistent with the existing regulations since approval would give them additional wagering interests. Total dollars wagered on a race increases with an increase in the number of wagering interests. Racetracks derive their revenue from a percentage of dollars wagered. Therefore it is an economic advantage to racetracks to continue with the existing regulations and policy to uncouple horses trained by the same trainer. Alternative No. 2 would limit racetracks uncoupling requests to be made only when two horses are entered by the same trainer in a stake, handicap, futurity or other special events. This alternative would give racetracks the opportunity to offer separate wagering interests and also limit the concern of the wagering public by prohibiting the uncoupling of three or more horses trained by the same trainer.

The Commission has also received negative comment concerning the uncoupling policy from other owners and trainers. Their concerns deal with the possibility of a trainer, who has multiple horses in a race, gaining an unfair advantage over the other competitors based on the number of horses they have in a race. Although they do not allege any impropriety has actually occurred, they claim that the perception exists that a trainer with multiple horses could control the running of the race. This perception increases when the wagering favorite is beaten by one of the other less favored horses trained by the same trainer. Alternative No. 3 would prohibit race secretaries from accepting entries from trainers of more than two horses in any given race. This alternative would seem to address the concerns of the other competitors; however, it may create other hardships on trainers and owners and integrity concerns. Trainers and owners have no way of knowing in advance if horses will be able to compete in stakes, handicaps, futurities and other special events. These races require owners to make periodic payments to racetracks in order to keep their horse eligible for these events. As a result, many owners make their payments with the hope their horse will be competitive and physically sound at the time of these races. Many times these payments are made as much as a year in advance of the race. Trainers are also unable to determine months in advance if a particular horse they are training will be able to compete in these special events. By limiting the number of horses a trainer can enter in a special event, trainers and owners are likely to be faced with the decision of changing the trainer at the last moment in order to comply with the proposed rule. The owners who would have to find a new trainer prior to the special event may be placed at a disadvantage by not being able to continue with the original trainer. This alternative may also have the potential of encouraging licensees to change to a new trainer on paper only but continuing to have their horse trained under the supervision of the original trainer. This would constitute a violation of other regulations that are considered serious integrity issues.

Social Impact

The alternative proposed amendments and new rule will have a positive influence on the integrity of racing. Alternative No. 1 addresses the concerns the public may have when attempting to handicap a race and eliminates the perception that all horses may not be racing to the fullest capabilities. Alternative No. 2 limits the racetracks' requests to uncouple horses trained by the same trainer to situations where the trainer has two horses in the race. This would be favored by racetracks since most uncoupling requests involve two horse entries. Alternative No. 3 would appeal to racetracks and most patrons but be opposed by certain trainers and owners.

Economic Impact

The alternative amendments and new rule would not have any direct fiscal impact on the State of New Jersey. However, Alternative No. 1 could theoretically reduce the dollars wagered at racetracks since fewer wagering interests would be competing. Tracks and horsemen receive a percentage of total dollars wagered. It is widely accepted that if fewer wagering interests are offered fewer dollars are wagered thereby reducing the racetracks and horsemen's share. It is difficult to estimate the extent to which revenue would be affected; however, the number of instances where this regulation would be applicable is considered to be minimal.

Alternative No. 2 could also reduce revenue to racetracks and horsemen; however, the number of instances this amendment would be implicated is less than Alternative No. 1 since racetracks would not be permitted to request the uncoupling of three or more horses trained by the same trainer.

Alternative No. 3 could also result in a reduction of horses available to racetracks thereby reducing the revenue generated by racetracks and horsemen. Certain trainers may also be negatively affected since they would have to inform certain owners they can no longer train their horses thereby reducing their income from training fees and a percentage of horses earnings. As with the comments concerning Alternatives No. 1 and 2, the number of times this regulation would be implicated would be minimal during the course of a year.

Executive Order No. 27 Statement

An Executive Order No. 27 analysis is not required because the rules of racing are dictated by statute, N.J.S.A. 5:5-22 et seq., and Administrative Code, Title 13, Subtitle J, and the subject matter of the instant proposal is not addressed by any Federal requirements or standards.

Regulatory Flexibility Statement

A regulatory flexibility analysis is not required because the proposed alternative amendments and new rule do not impose reporting, recordkeeping or other compliance requirements on small businesses as defined under the Regulatory Flexibility Act, N.J.S.A. 52:14B-16 et seq. The alternative amendments to N.J.A.C. 13:70-6.5 concern the uncoupling of horses and racing as separate wagering interests when trained by the same trainer but owned by separate interests. The alternative proposed new rule, N.J.A.C. 13:70-6.58, concerns the acceptance of entries, by race secretaries, from trainers of more than two horses in a race. Track associations, whose actions would be affected by the proposed alternative amendments and new rule, are not small businesses, as employing more than 100 people.

Full text of the proposal follows (additions indicated in boldface **thus**; deletions indicated in brackets [thus]):

ALTERNATIVE NO. 1

13:70-6.5 Coupled horses

All horses owned wholly or in part by the same owner or the spouse of any such owner, or trained by the same trainer, must be coupled and run as an entry. For purpose of this section "ownership" shall be construed to mean any person required to be licensed as an owner pursuant to these rules and in the instance of multiple ownerships, persons possessing at least a five percent commonality of interest in each of the respective horses. [Provided however that when a trainer enters two or more horses in a stake, handicap, futurity or other special event under bona fide separate ownerships, the horse may, at the request of the association and with the approval of the Commission, be permitted to race as separate wagering entities.] If the race is split in two or more divisions, horses in any "entry" shall be seeded in separate divisions insofar as possible but the divisions in which they compete and their post positions shall be drawn by lot.

ALTERNATIVE NO. 2

13:70-6.5 Coupled horses

All horses owned wholly or in part by the same owner or the spouse of any such owner, or trained by the same trainer, must be coupled and run as an entry. For purpose of this section "ownership" shall be construed to mean any person required to be licensed as an owner pursuant to these rules and in the instance of multiple ownerships, persons possessing at least a five percent commonality of interest in each of the respective horses. Provided however that when a trainer enters [two or more] **no more than two** horses in a stake, handicap, futurity or other special event under bona fide separate ownerships, the horses may, at the request of the association and with the approval of the Commission, be permitted to race as separate wagering entities. If the race is split in two or more divisions, horses in any "entry" shall be seeded in separate divisions insofar as possible but the divisions in which they compete and their post positions shall be drawn by lot.

You're viewing an archived copy from the New Jersey State Library.

ALTERNATIVE NO. 3

13:70-6.58 Limitation of entries by trainers

Racing secretaries are prohibited from accepting entries from trainers of more than two horses in any given race.

(a)

NEW JERSEY RACING COMMISSION

Harness Rules

Entries; Limitations of Entries by Trainers

Proposed Amendment: N.J.A.C. 13:71-16.5

Proposed New Rule: N.J.A.C. 13:71-16.12

Authorized By: New Jersey Racing Commission, Frank Zanzuccki, Executive Director.

Authority: N.J.S.A. 5:5-30.

Proposal Number: PRN 1995-79.

Submit written comments by March 8, 1995 to:
Frank Zanzuccki, Executive Director
New Jersey Racing Commission
CN 088
Trenton, New Jersey 08625

The agency proposal follows:

Summary

The Racing Commission is interested in obtaining public comment on three alternative proposed amendments and new rule concerning the uncoupling of horses that are trained by the same trainer but owned by separate interests. The Commission determined to advertise for public comment alternative amendments to N.J.A.C. 13:71-16.5 and proposed new rule N.J.A.C. 13:71-16.12. The Commission may adopt Alternative No. 1 or No. 2 as an amendment to the existing rule and may adopt new rule Alternative No. 3 without change to the existing rules or in conjunction with amendments proposed in Alternatives No. 1 or No. 2. Comments may address any or all of the proposed alternatives.

According to the existing rules, racetracks may request approval from the Commission to uncouple horses and allow them to race as separate wagering interests when a trainer enters two or more horses in a stake, handicap, futurity or other special event under bonafide separate ownership. Over the years the Commission, through its staff, has routinely approved these requests provided they were consistent with the regulation. Recent situations have occurred where a trainer has had as many as six horses entered in a race in which approval was granted to race as separate wagering interests. This decision resulted in negative comment from patrons citing difficulty in determining which one of the six horses trained by the same trainer was most likely to win. Had the Commission denied the request of the racetrack to uncouple these horses the patron would not have to make that type of decision. The horses would have remained coupled and a wager on one would have the effect as a wager on all horses so coupled. In reviewing these concerns the Commission has determined that the integrity of the race was being called into question by these patrons. Due to the seriousness of these questions and the Commissions overriding concern for integrity issues, alternative proposals are made to address these concerns.

Alternative No. 1 would eliminate the provision allowing racetracks to request exceptions to the coupling rule thereby requiring all horses to race as a single wagering interest regardless of whether the horses are competing in a stake, futurity, handicap or other special event.

Racetracks make requests to uncouple horses consistent with the existing regulations since approval would give them additional wagering interests. Total dollars wagered on a race increases with an increase in the number of wagering interests. Racetrcks derive their revenue from a percentage of dollars wagered. Therefore it is an economic advantage to racetracks to continue with the existing regulations and policy to uncouple horses trained by the same trainer. Alternative No. 2 would limit racetracks uncoupling requests to be made ony when two horses are entered by the same trainer in a stake, handicap, futurity or other special events. This alternative would give racetracks the opportunity to offer separate wagering interests and also limit the concern of the wagering public by prohibiting the uncoupling of three or more horses trained by the same trainer.

The Commission has also received negative comment concerning the uncoupling policy from other owners and trainers. Their concerns deal with the possibility of a trainer, who has mulitple horses in a race, gaining an unfair advantage over the other competitors based on the number of horses they have in a race. Although they do not allege any impropriety has acutally occurred, they claim that the perception exists that a trainer with multiple horses could control the running of the race. This perception increases when the wagering favorite is beaten by one of the other less favored horses trained by the same trainer. Alternative No. 3 would prohibit race secretaries from accepting entries from trainers of more than two horses in any given race. This alternative would seem to address the concerns of the other competitors, however it may create other hardships on trainers and owners and integrity concerns. Trainers and owners have no way of knowing in advance if horses will be able to compete in stakes, handicaps, futurities and other special events. These races require owners to make periodic payments to racetracks in order to keep their horse eligible for these events. As a result, many owners make their payments with the hope their horse will be competitive and physically sound at the time of these races. Many times these payments are made as much as a year in advance of the race. Trainers are also unable to determine months in advance if a particular horse they are training will be able to compete in these special events. By limiting the number of horses a trainer can enter in a special event, trainers and owners are likely to be faced with the decision of changing the trainer at the last moment in order to comply with the proposed rule. The owners who would have to find a new trainer prior to the special event may be placed at a disadvantage by not being able to continue with the original trainer. This alternative may also have the potential of encouraging licensees to change to a new trainer on paper only but continuing to have their horse trained under the supervision of the original trainer. This would constitute a violation of other regulations that are considered serious integrity issues.

Social Impact

The alternative proposed amendments and new rule will have a positive influence on the integrity of racing. Alternative No. 1 addresses the concerns the public may have when attempting to handicap a race and eliminates the perception that all horses may not be racing to the fullest capabilities. Alternative No. 2 limits the racetracks' requests to uncouple horses trained by the same trainer to situations where the trainer has two horses in the race. This would be favored by racetracks since most uncoupling requests involve two horse entries. Alternative No. 3 would appeal to racetracks and most patrons but be opposed by certain trainers and owners.

Economic Impact

The alternative amendments and new rule would not have any direct fiscal impact on the State of New Jersey. However, Alternative No. 1 could theoretically reduce the dollars wagered at racetracks since fewer wagering interests would be competing. Tracks and horsemen receive a percentage of total dollars wagered. It is widely accepted that if fewer wagering interests are offered fewer dollars are wagered thereby reducing the racetracks and horsemen's share. It is difficult to estimate the extent to which revenue would be affected; however, the number of instances where this regulation would be applicable is considered to be minimal.

Alternative No. 2 could also reduce revenue to racetracks and horsemen however the number of instances this amendment would be implicated is less than Alternative No. 1 since racetracks would not be permitted to request the uncoupling of three or more horses trained by the same trainer.

Alternative No. 3 could also result in a reduction of horses available to racetracks thereby reducing the revenue generated by racetracks and horsemen. Certain trainers may also be negatively affected since they would have to inform certain owners they can no longer train their horses thereby reducing their income from training fees and a percentage of horses earnings. As with the comments concerning Alternatives No. 1 and 2, the number of times this regulation would be implicated would be minimal during the course of a year.

Executive Order No. 27 Statement

An Executive Order No. 27 analysis is not required because the rules of racing are dictated by statute N.J.S.A. 5:5-22 et seq. and Administrative Code, Title 13, Subtitle J, and the subject matter of the instant proposal is not addressed by any Federal requirements or standards.

You're viewing an archived copy from the New Jersey State Library.

Regulatory Flexibility Statement

A regulatory flexibility analysis is not required because the proposed alternative amendments and new rule do not impose reporting, recordkeeping or other compliance requirements on small businesses as defined under the Regulatory Flexibility Act, N.J.S.A. 52:14B-16 et seq. The alternative amendments to N.J.A.C. 13:71-6.5 concern the uncoupling of horses and racing as separate wagering interests when trained by the same trainer but owned by separate interests. The alternative proposed new rule, N.J.A.C. 13:71-16.12, concerns the acceptance of entries, by race secretaries, from trainers of more than two horses in a race. Track associations, whose actions would be affected by the proposed alternative amendments and new rule, are not small businesses, as employing more than 100 people.

Full text of the proposal follows (additions indicated in boldface **thus**; deletions indicated in brackets [thus]):

ALTERNATIVE NO. 1

13:71-16.5 Entries

When the starters in a race include two or more horses owned or trained by the same person, or trained in the same stable or by the same management, they shall be coupled as an "entry" and a wager on one horse in the "entry" shall be a wager on all horses in the "entry." "Ownership" shall be construed to mean any person required to be licensed as an owner pursuant to these rules and in the instance of multiple ownerships, persons possessing at least a five percent commonality of interest in each of the respective horses. [Provided, however, that when a trainer enters two or more horses in a stake, early closing, futurity, free for all or other special event under bona fide separate ownerships, the said horses may at the request of the association and with the approval of the Commission, be permitted to race as separate betting entries.] If the race is split in two or more divisions, horses in an "entry" shall be seeded in separate divisions insofar as possible, but the divisions in which they compete and their post positions shall be drawn by lot. The above provisions shall also apply to elimination heats.

ALTERNATIVE NO. 2

13:71-16.5 Entries

When the starters in a race include two or more horses owned or trained by the same person, or trained in the same stable or by the same management, they shall be coupled as an "entry" and a wager on one horse in the "entry" shall be a wager on all horses in the "entry." "Ownership" shall be construed to mean any person required to be licensed as an owner pursuant to these rules and in the instance of multiple ownerships, persons possessing at least a five percent commonality of interest in each of the respective horses. Provided, however, that when a trainer enters [two or more] **no more than two** horses in a stake, early closing, futurity, free for all, or other special event under bona fide separate ownerships, the [horse] said **horses** may, at the request of the association and with the approval of the Commission, be permitted to race as separate betting entities. If the race is split in two or more divisions, horses in an "entry" shall be seeded in separate divisions insofar as possible, but the divisions in which they compete and their post positions shall be drawn by lot. The above provisions shall also apply to elimination heats.

ALTERNATIVE NO. 3

13:71-16.12 Limitation of entries by trainers

Racing secretaries are prohibited from accepting entries from trainers of more than two horses in any given race.

(a)

VIOLENT CRIMES COMPENSATION BOARD

Counseling Fees

Proposed Amendment: N.J.A.C. 13:75-1.27

Authorized By: Violent Crimes Compensation Board, Jacob C. Toporek, Chairman.

Authority: N.J.S.A. 52:4B-9.

Proposal Number: PRN 1995-52.

Submit comments by March 8, 1995 to:
Amedeo A. Gaglioti, Esq.
Violent Crimes Compensation Board
60 Park Place
Newark, New Jersey 07102

The agency proposal follows:

Summary

The proposed amendment to N.J.A.C. 13:25-1.27(d)2 would allow the Board, on a case-by-case basis, to award psychological counseling sessions in excess of those afforded under N.J.A.C. 13:75-1.27(d) to a direct victim/minor, absent evidence of pre-crime problems requiring such counseling. This amendment is based upon the State's interest in protecting the health and safety of its children. The amendment seeks to benefit the innocent minor victims of crime.

Social Impact

By permitting compensation for a greater number of counseling sessions, the Board hopes to more fully ameliorate the problems incurred by innocent victims of crime. No social impact on the Board or society in general is anticipated.

Economic Impact

The proposed amendment will provide increased compensation to innocent victims in accordance with statutory provisions of N.J.S.A. 52:4B-12 and 18(d) by increasing the number of counseling sessions provided.

The proposed change will allow both increased amounts of compensation and compensation to a greater number of innocent victims.

Regulatory Flexibility Statement

The Violent Crimes Compensation Board's rules govern the process by which victims of violent crimes and their attorneys may make claims for compensation.

The proposed amendment imposes no reporting, recordkeeping or other compliance requirements upon small businesses, as defined under the Regulatory Flexibility Act, N.J.S.A. 52:14B-16 et seq., since it provides for increased counseling sessions. Therefore, a regulatory flexibility analysis is not required.

Full text of the proposed amendment follows:

13:75-1.27 Counseling Fees

(a)-(c) (No change.)

(d) The Board shall award no compensation for out-of-pocket unreimbursed or unreimbursable psychological counseling expenses related to the incident for a period greater than 50 sessions for any victim or claimant 18 years of age or older, and for no more than 100 sessions for any victim under the age of 18 (on October 7, 1991) notwithstanding the date upon which the application for compensation was filed.

1. (No change.)

2. In those instances where it has been shown by a preponderance of the evidence that the direct victim/minor has no psychological, emotional, mental, drug or alcohol-related problems which pre-date the crime on which a claim is based, the Board as of (the effective date of this amendment) may, in its discretion, award such additional psychological counseling sessions for the direct victim/minor as it deems appropriate.

(e) (No change.)

You're viewing an archived copy from the New Jersey State Library.

TRANSPORTATION

(a)

DIVISION OF TRAFFIC ENGINEERING AND LOCAL AID
BUREAU OF TRAFFIC ENGINEERING AND SAFETY PROGRAMS
Speed Limits
Grove Street-Haddonfield Road (under State jurisdiction)—Route N.J. 70 Connector Ramp
Cherry Hill Township, Camden County
Proposed New Rule: N.J.A.C. 16:28-1.64

Authorized By: Richard C. Dube, Director, Division of Traffic Engineering and Local Aid.
Authority: N.J.S.A. 27:1A-5, 27:1A-6, 39:4-98 and 39:4-198.
Proposal Number: PRN 1995-70.

Submit comments by March 8, 1995 to:
William E. Anderson
Manager
New Jersey Department of Transportation
Bureau of Traffic Engineering and Safety Programs
1035 Parkway Avenue
CN 613
Trenton, New Jersey 08625

The agency proposal follows:

Summary

The Department of Transportation is proposing a new rule at N.J.A.C. 16:28-1.64 that will establish a certain "speed limit" zone along Grove Street-Haddonfield Road (under State jurisdiction)—Route N.J. 70 Connector Ramp in Cherry Hill Township, Camden County, for the efficient flow of traffic, the enhancement of safety and the well-being of the populace.

Based upon a request from the local government of Cherry Hill Township, in a letter from Lieutenant Michael Nuzzo dated August 26, 1994, and as part of a review of current conditions, the Department's Bureau of Traffic Engineering and Safety Programs conducted a traffic investigation. The investigation concluded that establishing a certain "speed limit" zone along Grove Street-Haddonfield Road (under State jurisdiction)—Route N.J. 70 Connector Ramp in Cherry Hill Township, Camden County, was warranted.

Appropriate signs shall be erected in areas where the speed limit zones have been changed.

Social Impact

The proposed new rule will establish a 30 miles per hour "speed limit" zone along Grove Street-Haddonfield Road (under State jurisdiction)—Route N.J. 70 Connector Ramp in Cherry Hill Township, Camden County, for the efficient flow of traffic, the enhancement of safety and the well-being of the populace. Appropriate signs will be erected to advise the motoring public.

Economic Impact

The Department and local government will incur direct and indirect costs for mileage, personnel and equipment requirements. The Department will bear the costs for the installation of "speed limit" zone signs. The costs involved in the installation and procurement of signs vary, depending upon the material used, size and method of procurement. Motorists who violate the rules will be assessed the appropriate fine in accordance with the "Statewide Violations Bureau Schedule," issued under New Jersey Court Rule 7:7-3.

Regulatory Flexibility Statement

The proposed new rule does not place any reporting, recordkeeping or compliance requirements on small businesses as the term is defined by the Regulatory Flexibility Act, N.J.S.A. 52:14B-16 et seq. The proposed new rule primarily affects the motoring public and the governmental entities responsible for the enforcement of the rules.

Full text of the proposed new rule follows:

16:28-1.64 Grove Street-Haddonfield Road (under State jurisdiction)—Route N.J. 70 Connector Ramp, Cherry Hill Township, Camden County

(a) The rate of speed designated for the certain part of Grove Street-Haddonfield Road (under State jurisdiction) described in this section shall be the maximum legal rate of speed:

1. In Camden County:

i. In Cherry Hill Township:

(1) For both directions of traffic:

(A) Thirty miles per hour between Park Boulevard and Wynwood Avenue.

(b)

DIVISION OF TRAFFIC ENGINEERING AND LOCAL AID
BUREAU OF TRAFFIC ENGINEERING AND SAFETY PROGRAMS
Speed Limits
Penn Avenue (under State jurisdiction)—Route N.J. 70 Connector Ramp
Cherry Hill Township, Camden County
Proposed New Rule: N.J.A.C. 16:28-1.65

Authorized By: Richard C. Dube, Director, Division of Traffic Engineering and Local Aid.
Authority: N.J.S.A. 27:1A-5, 27:1A-6, 39:4-98 and 39:4-198.
Proposal Number: PRN 1995-71.

Submit comments by March 8, 1995 to:
William E. Anderson
Manager
New Jersey Department of Transportation
Bureau of Traffic Engineering and Safety Programs
1035 Parkway Avenue
CN 613
Trenton, New Jersey 08625

The agency proposal follows:

Summary

The Department of Transportation is proposing a new rule at N.J.A.C. 16:28-1.65 that will establish a certain "speed limit" zone along Penn Avenue (under State jurisdiction)—Route N.J. 70 Connector Ramp in Cherry Hill Township, Camden County, for the efficient flow of traffic, the enhancement of safety and the well-being of the populace.

Based upon a request from the local government of Cherry Hill Township, in a letter from Lieutenant Michael Nuzzo dated August 26, 1994, and as part of a review of current conditions, the Department's Bureau of Traffic Engineering and Safety Programs conducted a traffic investigation. The investigation concluded that establishing a certain "speed limit" zone along Penn Avenue (under State jurisdiction)—Route N.J. 70 Connector Ramp in Cherry Hill Township, Camden County, was warranted.

Appropriate signs shall be erected in areas where the speed limit zones have been changed.

Social Impact

The proposed new rule will establish a 30 miles per hour "speed limit" zone along Penn Avenue (under State jurisdiction)—Route N.J. 70 Connector Ramp in Cherry Hill Township, Camden County, for the efficient flow of traffic, the enhancement of safety, and the well-being of the populace. Appropriate signs will be erected to advise the motoring public.

Economic Impact

The Department and local government will incur direct and indirect costs for mileage, personnel and equipment requirements. The Department will bear the costs for the installation of "speed limit" zone signs. The costs involved in the installation and procurement of signs vary, depending upon the material used, size and method of procurement. Motorists who violate the rules will be assessed the appropriate fine in accordance with the "Statewide Violations Bureau Schedule," issued under New Jersey Court Rule 7:7-3.

You're viewing an archived copy from the New Jersey State Library.

Regulatory Flexibility Statement

The proposed new rule does not place any reporting, recordkeeping or compliance requirements on small businesses as the term is defined by the Regulatory Flexibility Act, N.J.S.A. 52:14B-16 et seq. The proposed new rule primarily affects the motoring public and the governmental entities responsible for the enforcement of the rules.

Full text of the proposed new rule follows:

16:28-1.65 Penn Avenue (under State jurisdiction)—Route N.J. 70 Connector Ramp, Cherry Hill Township, Camden County

(a) The rate of speed designated for the certain part of Penn Avenue (under State jurisdiction) described in this section shall be the maximum legal rate of speed:

1. In Camden County:

i. In Cherry Hill Township:

(1) For both directions of traffic:

(A) Thirty miles per hour between Park Boulevard and Route N.J. 70.

(a)

DIVISION OF TRAFFIC ENGINEERING AND LOCAL AID

BUREAU OF TRAFFIC ENGINEERING AND SAFETY PROGRAMS

Speed Limits

Park Boulevard (under State jurisdiction)—Route N.J. 70 Connector Ramp

Cherry Hill Township, Camden County

Proposed New Rule: N.J.A.C. 16:28-1.71

Authorized By: Richard C. Dube, Director, Division of Traffic Engineering and Local Aid.

Authority: N.J.S.A. 27:1A-5, 27:1A-6, 39:4-98 and 39:4-198.

Proposal Number: PRN 1995-69.

Submit comments by March 8, 1995 to:
William E. Anderson
Manager
New Jersey Department of Transportation
Bureau of Traffic Engineering and Safety Programs
1035 Parkway Avenue
CN 613
Trenton, New Jersey 08625

The agency proposal follows:

Summary

The Department of Transportation is proposing a new rule at N.J.A.C. 16:28-1.71 that will establish a certain "speed limit" zone along Park Boulevard (under State jurisdiction)—Route N.J. 70 Connector Ramp in Cherry Hill Township, Camden County, for the efficient flow of traffic, the enhancement of safety and the well-being of the populace.

Based upon a request from the local government of Cherry Hill Township, in a letter from Lieutenant Michael Nuzzo dated August 26, 1994, and as part of a review of current conditions, the Department's Bureau of Traffic Engineering and Safety Programs conducted a traffic investigation. The investigation concluded that establishing a certain "speed limit" zone along Park Boulevard (under State jurisdiction)—Route N.J. 70 Connector Ramp in Cherry Hill Township, Camden County, was warranted.

Appropriate signs shall be erected in areas where the speed limit zones have been changed.

Social Impact

The proposed new rule will establish a 35 miles per hour "speed limit" zone along Park Boulevard (under State jurisdiction)—Route N.J. 70 Connector Ramp in Cherry Hill Township, Camden County, for the efficient flow of traffic, the enhancement of safety and the well-being of the populace. Appropriate signs will be erected to advise the motoring public.

Economic Impact

The Department and local government will incur direct and indirect costs for mileage, personnel and equipment requirements. The Department will bear the costs for the installation of "speed limit" zone signs. The costs involved in the installation and procurement of signs vary, depending upon the material used, size and method of procurement. Motorists who violate the rules will be assessed the appropriate fine in accordance with the "Statewide Violations Bureau Schedule," issued under New Jersey Court Rule 7:7-3.

Regulatory Flexibility Statement

The proposed new rule does not place any reporting, recordkeeping or compliance requirements on small businesses as the term is defined by the Regulatory Flexibility Act, N.J.S.A. 52:14B-16 et seq. The proposed new rule primarily affects the motoring public and the governmental entities responsible for the enforcement of the rules.

Full text of the proposed new rule follows:

16:28-1.71 Park Boulevard (under State jurisdiction)—Route N.J. 70 Connector Ramp, Cherry Hill Township, Camden County

(a) The rate of speed designated for the certain part of Park Boulevard (under State jurisdiction) described in this section shall be the maximum legal rate of speed:

1. In Camden County:

i. In Cherry Hill Township:

(1) For both directions of traffic:

(A) Thirty-five miles per hour between Penn Avenue and Grove Street (County Road 644).

TREASURY-GENERAL

(b)

DIVISION OF PENSIONS AND BENEFITS

Alternate Benefit Program

Enrollment Eligibility; Transfers

Proposed Amendment: N.J.A.C. 17:1-2.12

Proposed Repeal and New Rule: N.J.A.C. 17:1-2.10

Proposed Repeal: N.J.A.C. 17:1-2.11

Authorized By: Margaret M. McMahon, Director, Division of Pensions and Benefits.

Authority: N.J.S.A. 18A:66-192 et seq.

Proposal Number: PRN 1995-72.

Submit comments by March 8, 1995 to:
Peter J. Gorman, Esq.
Executive Assistant
Division of Pensions and Benefits
CN 295
Trenton, New Jersey 08625

The agency proposal follows:

Summary

The Alternate Benefit Program (ABP) is a defined contribution retirement program for eligible employees of the public institutions of higher education in New Jersey. In addition to retirement benefits, the ABP provides members with life insurance and disability coverage.

The program allows members to direct their own retirement account while offering portability of accumulated contribution balances. Members are permitted to allocate and transfer employer and employee contributions between authorized investment carriers. The variety of investment choices and distribution methods offered by the authorized carriers provide members flexibility in meeting their retirement goals.

The proposed amendment, repeal and new rule reflect some of the changes in the administration of the Alternate Benefit Program that resulted from the passage of P.L. 1994, c.48. Under that law, the responsibility for determining eligibility for participation in the Alternate Benefit Program was transferred to the Division of Pensions and Benefits from the former Department of Higher Education. Eligible participants include full-time faculty members, visiting professors and professional

You're viewing an archived copy from the New Jersey State Library.

administrative staff members of the University of Medicine and Dentistry of New Jersey, the State colleges, the county colleges, the Commission of Higher Education and the Office of Student Assistance. The definitions of professional administrative staff and full-time are also clarified.

Social Impact

ABP participation currently totals approximately 14,000 members. Traditionally, faculty in the field of higher education throughout the country fund their retirement by participating in defined contribution programs funded by employer and employee contributions. The proposed amendments would enable New Jersey's public colleges and universities, and other institutions of higher education; that is, the Commission of Higher Education and the Office of Student Assistance, to compete more effectively in attracting and retaining qualified personnel. The caliber of the state's public higher education faculty and staff directly affect the quality of education provided and our ability to attract the most qualified students.

Economic Impact

The economic impact of the proposed amendment is minimal. The Commissioner of Higher Education and Office of Student Assistance were formed upon the dissolution of the Department of Higher Education. The professional staffs of the Department were eligible for the ABP and the proposed amendments qualify current and future employees of the successor agencies for enrollment, if otherwise eligible. Visiting professors have also been included in the proposed amendments for ABP eligibility. The number of visiting professors at New Jersey's state colleges and universities is relatively small. The proposed amendments will enhance the institution's ability to attract qualified candidates by enabling the professor to continue contributing to a retirement program during his period of New Jersey employment. The visiting professor will contribute five percent of base salary and the State of New Jersey will contribute eight percent of base salary to the ABP.

Regulatory Flexibility Statement

A regulatory flexibility analysis is not required because the proposed amendments do not impose reporting, recordkeeping or other compliance requirements upon small businesses as defined under the Regulatory Flexibility Act, N.J.S.A. 52:14B-16 et seq. Since the rules of the Division of Pensions and Benefits only impact upon public employers and/or public employees, the amendments will not have any effect upon small businesses or private industry in general.

Full text of the proposal follows (additions indicated in boldface **thus**; deletions indicated in brackets [thus]):

17:1-2.10 [Eligibility; new faculty position] **Enrollment eligibility; general provisions**

[(a) If the Board of Higher Education declares a particular job title to be in "applicable academic position," all personnel in the several institution currently employed in that position will then become eligible for participation in the Alternate Benefit Program and must, if otherwise eligible, elect within 90 days to participate in either the Alternate Benefit Program or the Public Employees' Retirement System.

(b) If an individual does not file an "Election of Retirement Coverage" form during this 90-day period, he must remain in, or if he is a member of the Teachers' Pension and Annuity Fund transfer to, the Public Employees' Retirement System.]

(a) Full-time faculty members, visiting professors and professional administrative staffs of the University of Medicine and Dentistry of New Jersey, Rutgers, the State University, the New Jersey Institute of Technology, the State colleges, the county colleges, the Commission of Higher Education and the Office of Student Assistance are eligible to participate in the Alternate Benefit Program under the provisions of N.J.S.A. 18A:66-167 et seq.

1. For the purposes of this subchapter, "professional administrative staff" means any employee whose minimum qualifications for hiring include a baccalaureate degree or its equivalent, but shall not include career service employees as defined by the Department of Personnel pursuant to the provisions of Title 11A of the New Jersey Revised Statutes.

2. For the purposes of this subchapter, "full-time" shall be defined as working 50 percent or more of the normal work week.

(b) Any eligible person who has been enrolled in the Alternate Benefit Program for at least one year may continue to be enrolled in the program, notwithstanding promotion or transfer to a position within the institution not otherwise eligible for the program.

(c) Employees meeting the following criteria shall not be eligible to participate in the Alternate Benefit Program:

1. Individuals temporarily within the United States under an F or J visa;

2. Temporary employees, with the exception of visiting professors, who are appointed for one school year, one semester or a lesser period of time. Any such full-time employee reappointed for a third consecutive semester may enroll within the Alternate Benefit Program;

3. Any employee receiving a retirement benefit from any pension system of the State of New Jersey, including an individual collecting an annuity or cash distribution from the Alternate Benefit Program; or

4. Individuals employed in a clerical or other non-professional position.

(d) Regarding questions arising concerning the application of this section, the Director of the Division of Pensions and Benefits shall have responsibility to determine eligibility for participation in the Alternate Benefit Program in consultation with the employing institute.

1. If the Division of Pensions and Benefits declares a particular job title to be eligible, all personnel in the several institutions currently employed in that position will then become eligible for participation in the Alternate Benefit Program and must, if otherwise eligible, elect within 90 days to participate in either the Alternate Benefit Program or the Public Employees' Retirement System.

2. If an individual does not file an "Election of Retirement Coverage" form during this 90-day period, he or she must remain in, or, if he or she is a member of the Teachers' Pension and Annuity Fund transfer to the Public Employees' Retirement System.

17:1-2.11 [Ineligible faculty members and temporary appointees] **(Reserved)**

[(a) Any regularly appointed teaching or administrative staff member who, when employed, is receiving a retirement annuity income from the Teachers' Insurance and Annuity Association or College Retirement Equities Fund, which is based in whole or in part on public employment in any state, shall be ineligible for participation in the Alternate Benefit Program or any other public retirement system.

(b) An employee who is appointed on a temporary basis for one school year, one semester or a lesser period of time is ineligible to participate in the Alternate Benefit Program. However, if the services of an employee who rendered service for a full school year are renewed for the succeeding school year, he shall participate in the Alternate Benefit Program.]

17:1-2.12 Interprogram transfers**; transfer to the Alternate Benefit Program from another State retirement system by employees of the Commission of Higher Education or Office of Student Assistance**

(a) If an Alternate Benefit Program participant terminates employment in a covered institution and becomes employed in an eligible position in another New Jersey public institution, the Division of Pensions will, upon the filing of the required forms with the division, continue all of the participant's rights and obligations in the New Jersey Alternate Benefit Program.

(b) Any individual employed by the Commission of Higher Education or Office of Student Assistance subsequent to July 1, 1994, but prior to (the effective date of this amendment) shall be entitled to transfer to the Alternate Benefit Program within a period of 120 days from (the effective date of this amendment).

You're viewing an archived copy from the New Jersey State Library.

TREASURY-TAXATION

(a)

DIVISION OF TAXATION

Corporation Business Tax

Doing Business in New Jersey; Definition and Rules of Construction

Proposed Amendment: N.J.A.C. 18:7-1.9

Authorized By: Richard D. Gardiner, Director, Division of Taxation.

Authority: N.J.S.A. 54:10A-27 and 54:50-1.

Proposal Number: PRN 1995-85.

Submit comments by March 8, 1995 to:
Nicholas Catalano
Chief, Tax Services
Division of Taxation
CN-269
Trenton, NJ 08646-0269

The agency proposal follows:

Summary

The proposed amendment modifies N.J.A.C. 18:7-1.9(d)2 and 3. N.J.A.C. 18:7-1.9(d)2 and 3 were adopted April 1994 (see 26 N.J.R. 1696(b)). These paragraphs were intended to indicate how the Division interprets Federal Law 86-272 dealing with tax immunity for certain solicitations of interstate sales, in light of the U.S. Supreme Court opinion *Wisconsin Dept. of Revenue v. William Wrigley, Jr. Company,* 112 *S.Ct.* 2447 (1992).

The amendment makes certain adjustments to the paragraphs to address comments from the New Jersey Society of Certified Public Accountants and advice from the New Jersey Attorney General's Office. N.J.A.C. 18:7-1.9(d)3iii is amended to indicate that an example of an activity that is immune from taxation is providing automobiles, owned or leased, registered or nonregistered in New Jersey, to sales personnel for their use in conducting protected activities. The amendment to N.J.A.C. 18:7-1.9(d)3iii is intended to make clear that the Division will follow the Multistate Tax Commission Revised Statement of Practices on this subject. N.J.A.C. 18:7-1.9(d)2vii is amended to clarify that an activity that is not immune from taxation is the approving or accepting of orders or the securing of deposits on sales. N.J.A.C. 18:7-1.9(d)2x is amended to indicate that carrying samples for sale, exchange or distribution in any manner for consideration or other value is also a non-immune activity. The amendments to N.J.A.C. 18:7-1.9(d)2vii and 1.9(d)2x are intended to clarify the originally intended meaning of the rules.

Social Impact

The proposed amendment will have a positive social impact by helping to clarify when the activities of an out of State corporation in New Jersey will cause the corporation to be subject to or immune from the New Jersey Corporation Business Tax, N.J.S.A. 54:10A-1 et seq., under Federal Law 86-272, the Interstate Income Act. The amendment will make the rules conform more closely to the Multistate Tax Commission (MTC) Statement of Information Concerning Practices of Multistate Tax Commission and Signatory States Under Public Law 86-272. The amendment will thus make clear that, even though New Jersey is not a signatory state, the Division, as a matter of policy, will generally follow the MTC interpretation of states' tax powers under P.L. 86-272. The amendment also brings the rules into conformity with the opinion in *Wisconsin Dept. of Revenue v. William Wrigley, Jr. Company,* 112 *S.Ct.* 2447 (1992).

Economic Impact

The proposed amendment itself should have negligible economic impact in that, relying on advice from the Attorney General, the Division is already following the policy expressed by the proposal. The Attorney General has interpreted *Wisconsin Dept. of Revenue v. William Wrigley, Inc. Company,* 112 *S.Ct.* 2447 (1992) to prevent states from making whether or not an automobile that is provided by a company to its salesman is registered or not registered in New Jersey a criterion for whether the company is immune from tax under P.L. 86-272. Under *Wrigley* the provision of an automobile to a salesman is "ancillary" to solicitation and therefore the company is immune from tax. N.J.A.C. 18:7-1.9(d)2iii is amended to follow this holding. Tax revenues can therefore not be derived from non-New Jersey corporations whose activities fall within the criteria of P.L. 86-272 as interpreted by *Wrigley.*

Executive Order No. 27 Statement

The proposed amendment does not contain requirements or standards which exceed requirements or standards imposed by Federal law. The rule at present conflicts with Federal Law 86-272, the Interstate Income Act, as interpreted by the United States Supreme Court, by making the providing of an automobile to sales people an activity that would create nexus for an out-of-State corporation for purposes of the Corporation Business Tax. The U.S. Supreme Court in *Wisconsin Dept. of Revenue v. William Wrigley, Jr. Company,* 112 *S.Ct.* 2447 (1992), stated that the provision of an automobile to salespeople should not create nexus under P.L. 86-272. The amendment is intended to bring the rule into conformance with Federal law under the *Wrigley* holding.

Regulatory Flexibility Analysis

The proposed amendment is relevant to the determination of whether any out-of-State corporation, large or small, is subject to or immune from the New Jersey Corporation Business Tax by virtue of Federal Law 86-272. No reporting or recordkeeping requirements or any annual compliance costs are imposed on small businesses, as defined under the Regulatory Flexibility Act, N.J.S.A. 52:14B-16 et seq. Small businesses may wish to obtain the advice of tax professionals, charging at normal rates, to ascertain if the amendment is relevant to their particular tax situation. In general, the amendment is intended to lessen the need for professional advice by clarifying the Division's policy on determining nexus of out-of-State corporations for purposes of the Corporation Business Tax under P.L. 86-272.

Full text of the proposal follows (additions indicated in boldface **thus**; deletions indicated in brackets [thus]):

18:7-1.9 Doing business in New Jersey; definition and rules of construction

(a)-(c) (No change.)

(d) If the only business activity of a foreign corporation within New Jersey consists of the solicitation of orders for sales of its tangible personal property, which orders are to be sent outside the State for acceptance or rejection and, if accepted, are to be filled by shipment or delivery from a point outside the State, then such corporation is not subject to tax in New Jersey, provided it is not subject to tax by virtue of other contacts. (See P.L. 86-272, 15 U.S.C. §381.)

1. (No change.)

2. Examples of activities that may be considered non-immune are:

i.-vi. (No change.)

vii. [Taking] **Approving or accepting** orders or **securing** deposits **on sales**;

ix. (No change.)

x. Carrying samples for **sale, exchange or** distribution **in any manner** for **consideration or other** value;

xi.-xii. (No change.)

3. Examples of immune activities are:

i.-ii. (No change.)

iii. Providing automobiles**, owned or leased, registered or** not registered in New Jersey, [for] **to** sales personnel **for their use in conducting protected activities**.

iv.-viii. (No change.)

(e) (No change.)

You're viewing an archived copy from the New Jersey State Library.

(a)

DIVISION OF TAXATION

Corporation Business Tax
Tax Credits' Priority

Proposed Amendment: N.J.A.C. 18:7-3.18
Proposed New Rule: N.J.A.C. 18:7-3.20

Authorized By: Richard D. Gardiner, Director, Division of Taxation.

Authority: N.J.S.A. 52:27H-81; 54:10A-27; 54:50-1; P.L. 1993, c.170, section 13 (N.J.S.A. 54:10A-5.4 Note); P.L. 1993, c.171, section 8 (N.J.S.A. 54:10A-5.16 Note).

Proposal Number: PRN 1995-80.

Submit comments by March 8, 1995 to:
Nicholas Catalano
Chief, Tax Services
Division of Taxation
50 Barrack Street
CN 269
Trenton, NJ 08646

The agency proposal follows:

Summary

The business incentive tax package enacted during 1993 contains four statutes which create new tax credits under the Corporation Business Tax Act. These are in addition to the existing credits for recycling equipment, the Urban Enterprise Zone Credits, and the Urban Development Project Employee Tax Credit. The Division believes that the credits' statutory provisions were intended and should be read *in pari materia* in the context of a total credit allowance which is limited. Statutory sections providing for a priority system include, among others, N.J.S.A. 54:10A-5.24b and 54:10A-5.18b and 5:19b. N.J.S.A. 54:10A-5.7c(2) suggests the precedence of the New Jobs Investment Tax Credit in the context of otherwise qualified investment by the taxpayer. The Rideshare Credit at N.J.S.A. 27:26A-15b(3) provides for its availability "after first applying the credits, if any, allowed under any other law . . .," thus, establishing itself as the last credit in the sequence. The proposed new rule thus sets forth and makes clear the priority system for use where a taxpayer may be entitled to multiple credits. The issue of carryforwards is also addressed in the proposed new rule.

The proposed new rule makes clear that, in the aggregate, the credits would not reduce a taxpayer's tax liability in any tax year by more than 50 percent of the tax liability otherwise due and would not reduce the tax liability to an amount less than the statutory minimum. In particular, the pertinent wording contained in the final credit enacted P.L. 1993, c.175, the research credit, ("The amount of the **credits** applied under this section . . . shall not exceed 50 percent of the tax liability otherwise due," N.J.S.A. 54:10A-5.24b (emphasis added)) sets forth the legislative intention for the credit ceiling at 50 percent. It supersedes the earlier and less complete language of other credit provisions. The proposed new rule also makes clear that eligibility for any carryover of a credit to a future tax year shall be as provided in the appropriate underlying statutory credit provision.

The coordinating rule affects only the credits mentioned in it and does not affect certain other technical credits under N.J.A.C. 18:7-8.3, for example.

Social Impact

The Division has been delegated the responsibility to give guidance to taxpayers, and taxpayers and their advisers need to have information on which to rely. Absent a rule coordinating the interaction of statutory credits, there is a possibility of uneven application of the statutes involved.

Economic Impact

The proposed new rule makes clear the intention to coordinate the application of corporation business tax credits. In some possible situations where a particular taxpayer may be eligible for two or more credits in a particular accounting period, the rule sets forth the limitation of the aggregate tax credit and eliminates potential ambiguities which could arise under independent readings of separate credit statutes. As such, the new rule may have a potential impact on State revenues by making explicit the legislative intention of decreasing the tax credit costs to the general treasury through use of a 50 percent aggregate credit ceiling. In addition, the rules are intended to facilitate taxpayer compliance with their statutory requirements and hence lower the resources necessary to be expended by taxpayers in the course of complying with the Act. Under certain circumstances, the rule may limit availability of tax credits.

Executive Order No. 27 Statement

While the research credit at N.J.S.A. 54:10A-5.24, enacted by the Legislature, refers to Federal law as a reference point for certain calculations required to compute the State tax credit and, therefore, there may be certain variances in the calculation of applicable Federal and State tax on a subject taxpayer, the proposed new rule does not contain any requirements for which Federal standards exist. The Federal law used as a reference point controls Federal tax requirements only, and not State tax requirements.

Regulatory Flexibility Analysis

The corporation business tax statutorily applies to both large and small business taxpayers, and the Division therefore discerns no basis for distinguishing between those two types of entities in the application of the proposed rules. The Division does not believe that services beyond normal accounting services generally used by a business are required for a business to comply with this proposed new rule. The costs for professional services to interpret the rules should thus ultimately be reduced as the intended effect of the new rule is to make the interaction of various statutory provisions easier for the public to understand by coordinating the credit provisions.

Full text of the proposal follows (additions indicated in boldface **thus**; deletions indicated in brackets [thus]):

18:7-3.18 Recycling tax credit

(a) (No change.)

(b) A corporate taxpayer which purchases qualified recycling equipment is entitled to a corporation business tax credit equal to 50 percent of the cost of the certified equipment, subject to the following limitations:

1.-3. (No change.)

4. The credit allowable in a given tax year cannot exceed 50 percent of the tax liability otherwise due on that return. [The tax liability otherwise due is computed after credit is taken pursuant to N.J.S.A. 52:27H-78 (urban enterprise zone employee tax credit).] **See N.J.A.C. 18:7-3.20 for priority of tax credits.**

5. (No change.)

(c)-(h) (No change.)

18:7-3.20 Coordination of tax credit

(a) The priority of credits for a taxpayer under the Corporation Business Tax Act shall be the priority of statutory credits set forth in this section. The tax imposed for a fiscal or calendar accounting year pursuant to section 5 of P.L. 1945, c.162, shall first be reduced by the amount of any credit allowed pursuant to section 3 of P.L. 1993, c.170 (N.J.S.A. 54:10A-5.6), then by any credit allowed pursuant to section 19 of P.L. 1983, c.303 (N.J.S.A. 52:27H-78), then by any credit allowed pursuant to section 12 of P.L. 1985, c.227 (N.J.S.A. 55:19-13), then by any credit allowed pursuant to section 42 of P.L. 1987, c.102 (N.J.S.A. 54:10A-5.3), then by any credit allowed under section 3 or 4 of P.L. 1993, c.171 (N.J.S.A. 54:10A-5.18 or 54:10A-5.19), then by any credit allowed pursuant to section 1 of P.L. 1993, c.175 (N.J.S.A. 54:10A-5.24), then by any credit allowed pursuant to section 1 of P.L. 1993, c.150 (N.J.S.A. 27:26A-15), the ride share tax credit. Section 1 of P.L. 1993, c.150 (N.J.S.A. 27:26A-15) shall reduce the taxes listed in section 1 of P.L. 1993, c.150 (N.J.S.A. 27:26A-15).

(b) The total amount of the credits listed in this section that are allowed against the tax imposed pursuant to section 5 of P.L. 1945, c.162 for the tax year shall not exceed 50 percent of the tax liability otherwise due and shall not reduce the tax liability to an amount less than statutory minimum provided in subsection (e) of section 5 of P.L. 1945, c.162.

(c) Any credit carryover should be taken in the manner set forth in the section granting the relevant credit and should be applied in the sequence that the credits are listed in (a) above. If the credit carryover section is silent about whether a carryover should be allowed, no carryover is allowed.

You're viewing an archived copy from the New Jersey State Library.

(a)

DIVISION OF TAXATION

Public Utility Tax

Proposed Amendments N.J.A.C. 18:22-5.5 and 11.12
Proposed New Rules: N.J.A.C. 18:22-14.1 through 14.3

Authorized By: Richard D. Gardiner, Director, Division of Taxation.

Authority: N.J.S.A. 54:50-1.

Proposal Number: PRN 1995-86.

Submit comments by March 8, 1995 to:
Nicholas Catalano
Chief, Tax Services
Division of Taxation
50 Barrack Street
CN-269
Trenton, NJ 08646

The agency proposal follows:

Summary

The proposed amendments and new rules delineate how tax rates are to be expressed for purposes of the apportionment of public utilities taxes to municipalities and for purposes of determining eligibility for participation in the Municipal Purposes Tax Assistance Fund.

N.J.S.A. 54:30A-24.1 requires that:

"The director shall annually apportion to each municipality the amount to be apportioned to it pursuant to section 9 of P.L. 1940, c.4 (C.54:30A-24), sections 12 and 13 of P.L. 1940, c.5 (C.54:30A-60 and 54:30A-61), and section 19 of P.L. 1991, c.184 (C.54:30A-61.2), except that: a. no municipality which in the three next preceding tax years had a municipal purposes tax rate of $0.10 or less shall receive a total amount pursuant to those sections greater than it received in 1979, plus 50% of the difference between the amount it received pursuant to those sections in that year and the greater amount it would have received pursuant to those sections in the year for which the apportionment and payment is made; .... Any municipality which has had a municipal purposes tax rate of $0.10 or less for any three tax years affecting its apportionment pursuant to this section shall be required to have a municipal purposes tax rate in excess of $0.10 for three consecutive tax years before its apportionment shall cease to be affected pursuant to this section."

Proposed N.J.A.C. 18:22-5.5(c) requires that the municipal purposes tax rate must be expressed to two decimal places and derived by truncating all additional decimal places to the right of the decimal. Decimal places are not rounded upwards or downwards and are carried only to two places to the right of the decimal. In truncation, the effect of all the additional decimal places to the right of the point of truncation is lost. The Division believes that truncation is implied in the statutory language.

Similarly, N.J.S.A. 54:30A-61.1 requires that:

"The director shall annually apportion to each municipality the amount to be apportioned to it pursuant to sections 12 and 13 of P.L. 1940, c.5 (C.54:30A-60 and 54:30A-61), section 9 of P.L. 1940, c.4 (C.54:30A-24) and section 19 of P.L. 1991, c.184 (C.54:30A-61.2), except that: a. no municipality which in the three next preceding tax years had a municipal purposes tax rate of $0.10 or less shall receive a total amount pursuant to those sections greater than it received in 1979, plus 50% of the difference between the amount it received pursuant to those sections in that year and the greater amount it would have received pursuant to those sections in the year for which the apportionment and payment is made; .... Any municipality which has had a municipal purposes tax rate of $0.10 or less for any three tax years affecting its apportionment pursuant to this section shall be required to have a municipal purposes tax rate in excess of $0.10 for three consecutive tax years before its apportionment shall cease to be affected pursuant to this section."

Proposed N.J.A.C. 18:22-11.12(c) requires that the municipal purposes tax rate for purposes of this section must be expressed to two decimal places and derived by truncating all additional decimal places to the right of the decimal.

P.L. 1980, c.12, the Municipal Purposes Tax Assistance Act, N.J.S.A. 54:1-46 et seq., created the Municipal Purposes Tax Assistance Fund and provided mechanisms for the deposit of public utility taxes into the fund and the apportionment and distribution of fund monies to municipalities. Proposed N.J.A.C. 18:22-14.1 through 14.3 are added to the rules to alert taxpayers to the existence of this fund and to cross-reference applicable statutory provisions. Proposed N.J.A.C. 18:22-14.3 explains the Division's practice of expressing the "municipal purposes equalized tax rate," for purposes of N.J.S.A. 54:1-47d, and the "State municipal purposes equalized tax rate," defined in N.J.S.A. 54:1-47j, to two decimal places derived by truncation.

Proposed N.J.A.C. 18:22-5.5(d), 11.12(d) and 14.1 require that no funds shall be distributed to qualifying municipalities unless the taxes representing the funds have actually been remitted to the State.

Social Impact

The proposal should have a positive social effect by clarifying the decimal tax expression which will be used in determining whether municipalities are subject to the limitations on apportionment of public utility tax set forth in N.J.S.A. 54:30A-24.1 and N.J.S.A. 54:30A-61.1. The proposal also allows municipalities to accurately gauge the amount of public utility taxes they can expect to receive under the Municipal Purposes Tax Assistance Fund by the calculation of the municipal purposes equalized tax rate and the State municipal purposes equalized tax rate under N.J.S.A. 54:1-47d and j. The proposal memorializes a long-standing and equitable practice of the Division.

Economic Impact

The proposal should have negligible economic impact in that it codifies the Division's present practice of using truncation in expressing the municipal tax rate for purposes of calculating apportionment limits under N.J.S.A. 54:30A-24.1 and N.J.S.A. 54:30A-61.1, and the "municipal purposes equalized tax rate" and "State municipal purposes equalized tax rate" under N.J.S.A. 54:1-47d and j. Truncation is widely used and accepted statistical methodology which eliminates decimal places to the right of the point of truncation. The use of truncation as opposed to rounding allows for a degree of certainty and simplicity in the mathematical expression of the municipal purposes tax rates by the State and municipalities. This affects the apportionment and distribution of public utility taxes to municipalities pursuant to N.J.S.A. 54:30A-24.1, N.J.S.A. 54:30A-61.1, and N.J.S.A. 54:1-47d and j. By stating that no funds shall be distributed to qualifying municipalities unless the taxes representing the funds have actually been remitted to the State, the proposed rules clarify that municipalities bear the risk with respect to nonpayment of taxes.

Executive Order No. 27 Statement

The proposed amendments and new rules do not relate to, or contain any standards or requirements which exceed, standards or requirements imposed by Federal law.

Regulatory Flexibility Statement

The proposed amendments and new rules do not impose reporting, recordkeeping or other compliance requirements on small businesses as the term is defined in the Regulatory Flexibility Act, N.J.S.A. 52:14B-16 et seq. The amendments and new rules do not affect the taxation of small businesses or any other taxpayers. The amendments and new rules clarify how the municipal purposes tax rate is to be expressed mathematically for purposes of the limitations on apportionment of public utilities taxes to municipalities in N.J.S.A. 54:30A-24.1 and 54:30A-61.1. The amendments and new rules also establish how the "municipal purposes equalized tax rate" and the "State municipal purposes equalized tax rate" are to be expressed mathematically for purposes of N.J.S.A. 54:1-47d and j.

Full text of the proposal follows (additions indicated in boldface **thus**):

18:22-5.5 Apportionment of taxes to municipalities

(a)-(b) (No change.)

(c) For the purposes of calculation of the local general purposes tax rate identified in N.J.S.A. 54:30A-24.1 to determine which municipalities shall be affected by the limitations based on local tax rates imposed in that place the rate shall be expressed to two decimal places and shall be derived by truncating all additional decimal places to the right of the decimal.

(d) No funds shall be distributed to qualifying municipalities unless the taxes representing the funds have actually been remitted to the State.

You're viewing an archived copy from the New Jersey State Library.

Statutory Reference

As to apportionment of taxes to municipalities, see N.J.S.A. 54:30A-24 **and 54:30A-24.1.**

18:22-11.12 Apportionment of gross receipts tax

(a)-(b) (No change.)

(c) For the purposes of calculation of the local general purposes tax rate identified in N.J.S.A. 54:30A-61.1 to determine which municipalities shall be affected by the limitations based on local tax rates imposed in that place the rate shall be expressed to two decimal places and shall be derived by truncating all additional decimal places to the right of the decimal.

(d) No funds shall be distributed to qualifying municipalities unless the taxes representing the funds have actually been remitted to the State.

Statutory Reference

As to apportionment of gross receipts tax, see N.J.S.A. 54:30A-61 **and 54:30A-61.1.**

SUBCHAPTER 14. MUNICIPAL PURPOSES TAX ASSISTANCE FUND

18:22-14.1 Municipal purposes tax assistance fund; establishment; distribution of deposits

There is established in the Department of the Treasury for the purpose of providing State aid to qualifying and participating municipalities a "Municipal Purposes Tax Assistance Fund" to be administered by the State Treasurer. All amounts deposited in the fund pursuant to law shall be distributed to qualifying municipalities pursuant to the Municipal Purposes Tax Assistance Act of 1980, N.J.S.A. 54:1-46 et seq. No funds shall be distributed to qualifying municipalities unless the taxes representing the funds have actually been remitted to the State.

18:22-14.2 Deposits to municipal purposes tax assistance fund

Deposits are made to the municipal purposes tax assistance fund pursuant to N.J.S.A. 54:30A-24.1 and 54:30A-61.1. See N.J.A.C. 18:22-5.5 and 11.12 for apportionment of taxes to municipalities.

18:22-14.3 Calculation of rates

(a) For the purpose of calculation of the rates which are used in determining eligibility for participation or qualification in the Municipal Purposes Tax Assistance Fund, the municipal purposes equalized tax rate, defined in N.J.S.A. 54:1-47d, shall be expressed in two decimal places derived by truncation.

(b) For the purpose of calculation of the rates which are used in determining eligibility for participation or qualification in the Municipal Purposes Tax Assistance Fund, the State municipal purposes equalized tax rate, defined in N.J.S.A. 54:1-47j, shall be expressed in two decimal places derived by truncation.

Statutory Reference

Municipal Purposes Tax Assistance Act of 1980, N.J.S.A. 54:1-46 et seq.

(a)

DIVISION OF TAXATION

Sales and Use Tax Act

Retention of Certificates; Inspection

Proposed Amendment: N.J.A.C. 18:24-10.6

Authorized By: Richard D. Gardiner, Director, Division of Taxation.

Authority: N.J.S.A. 54:50-1.

Proposal Number: PRN 1995-83.

Submit comments by March 8, 1995 to:

Nicholas Catalano
Chief, Tax Services
Division of Taxation
50 Barrack St., CN 269
Trenton, NJ 08646-0269

The agency proposal follows:

Summary

This proposed amendment is intended to clarify the provisions of N.J.S.A. 54:32B-15 of the Sales and Use Tax Act in light of the New Jersey Tax Court ruling in the case of *Steelcase, Inc. v. Director, Div. of Taxation*, 13 *N.J. Tax* 182 (1993). N.J.S.A. 54:32b-15 states that "every person purchasing tangible personal property for resale shall file with the director a certificate of registration..." while, under *Steelcase*, a person who has no nexus with this State can show resale through evidence other than the issuance of a New Jersey Resale Certificate (Form ST-3). The amendment provides that sales to an unregistered vendor may be deemed to be sales for resale, if the purchaser issues the resale certificate of another state; provided that the purchaser is not required to be registered in New Jersey under law or that the purchaser did not take delivery of the goods in New Jersey.

Social Impact

This proposed amendment will inform taxpayers and their representatives of the Division's position with respect to certain sale transactions that will continue to be treated as retail sales, even though the other party is itself a vendor. The amendment, once adopted, should have a positive effect through the establishment of guidelines which determine the incidence of sales tax on drop shipment and pick-up sales in New Jersey.

Economic Impact

The proposed amendment will prevent the underpayment of sales tax by persons who may believe a sale for resale exemption applies, contrary to N.J.S.A. 54:32B-15. It would also save New Jersey registered vendors the expense of audit assessments in those situations where the law can easily be misapplied in the absence of regulatory guidance.

Executive Order No. 27 Statement

The provisions of the Sales and Use Tax Act affected by this proposed amendment neither involve a program established under Federal law nor a statute that incorporates or refers to Federal standards or Federal requirements. There are no analogous Federal statutes, regulations or standards.

Regulatory Flexibility Analysis

This proposed amendment does not impose reporting, recordkeeping, or other compliance requirements on small businesses as defined in the New Jersey Regulatory Flexibility Act, N.J.S.A. 52:14B-16 et seq. The amendment instead clarifies the application of N.J.S.A. 54:32B-15 under current case law and thereby advises taxpayers of their rights and obligations. It compels nothing additional from small businesses; the Sales and Use Tax Act itself imposes certain requirements on all vendors, regardless of size or status, among which are the obligation to collect sales tax on taxable sales and to accept properly completed exemption certificates. In this case, a properly completed exemption certificate of another state can be accepted under certain circumstances. This benefits all businesses located in New Jersey by making sales transactions easier to complete for sales tax purposes.

Full text of the proposal follows (addtions indicated in boldface **thus**):

18:24-10.6 Retention of certificates; inspection

(a)-(b) (No change.)

(c) Where a certificate is not made available for inspection on or before that time, the seller or lessor must prove to the satisfaction of the Director, by means of evidence other than certification of the purchases, that the sale or lease in question is, in fact, exempt. **Whenever the sale for resale exemption is claimed by an unregistered vendor, the properly completed and executed resale certificate of another state is deemed evidence of exemption; provided, however, that:**

1. The person to whom the sale was made and who issued the certificate was not required to be registered in New Jersey under N.J.S.A. 54:32B-2(i) at the time of sale; or

2. The person to whom the sale was made did not take delivery of the property at the sales location in New Jersey.

You're viewing an archived copy from the New Jersey State Library.

(a)

DIVISION OF TAXATION

Gross Income Tax
Partnership; Net Profits from Business
Proposed Amendments: N.J.A.C. 18:35-1.14 and 1.25

Authorized By: Richard D. Gardiner, Director, Division of Taxation.
Authority: N.J.S.A. 54A:9-17(a).
Proposal Number: PRN 1995-81.

Submit comments by March 8, 1995 to:
Nicholas Catalano
Chief, Tax Services
Division of Taxation
CN-269
Trenton, NJ 08646

The agency proposal follows:

Summary

On February 4, 1994, the Division of Taxation, at 26 N.J.R. 1241(b), adopted amendments to N.J.A.C. 18:35-1.14 and a new rule, N.J.A.C. 18:35-1.25, which addressed the taxability of partners and partnerships pursuant to the Gross Income Tax Act, N.J.S.A. 54A:1-1 et seq., consistent with the ruling of the New Jersey Supreme Court in *Smith v. Director, Division of Taxation,* 108 *N.J.* 19, 527 *A.2d* 843 (1987), and the meaning of the phrase "net income of a business, profession, or other activity" as used in N.J.S.A. 54A:5-1b. The amendments proposed herein clarify those rules relating to costs and expenses incurred in the conduct of a business, and relax those relating to unreimbursed partnership business expenses.

First, these amendments make clear that, barring a successful challenge to such treatment by either the Internal Revenue Service or the New Jersey Division of Taxation, a partnership's treatment of an item on its Federal income tax return (Form 1065) will be deemed conclusively correct for purposes of determining the item's effect on an individual partner's New Jersey gross income tax liability. Thus, for example, if a partnership makes a payment to a charity described in IRC §170(c) that is classified on the partnership's Federal tax return as a charitable contribution and separately stated on the Federal Form K-1s, then, barring a successful challenge to such treatment by the Internal Revenue Service or the Division of Taxation, or the timely filing of an amended Federal partnership return changing the classification and the acceptance of this amendment by both the Internal Revenue Service and the Division of Taxation, that classification will be binding for gross income tax purposes. A partner may not then contend that the payment was an ordinary and necessary business expense that is deductible for purposes of determining the partner's distributive share of partnership income under the Gross Income Tax Act. This conclusive presumption will ensure that a partnership's activities will be treated consistently when determining their effect on the New Jersey gross income tax liabilities of all of the partners.

Similarly, these amendments clarify that, barring a successful challenge to such treatment by the Internal Revenue Service or the Division of Taxation, an individual taxpayer's treatment of an item on his Federal income tax return (Form 1040) will also be deemed conclusively correct for purposes of determining the effect of such item on his gross income tax liability. For example, if a taxpayer makes a payment that is classified on his Federal individual tax return as a charitable contribution deductible under IRC §170, then barring a successful challenge to such treatment by the Internal Revenue Service or the Division of Taxation, or a timely amendment of his Federal income tax return that is accepted by both the Internal Revenue Service and the Division of Taxation, that classification will be binding for gross income tax purposes. The taxpayer may then contend that the payment was a cost or expense that is deductible for purposes of determining the taxpayer's net profits from a business under the New Jersey Gross Income Tax Act.

The amendments also make clear that only "ordinary and necessary" costs or expenses incurred in the conduct of a business are deductible in determining the net profits of such business for gross income tax purposes. They further clarify that a cost or expense paid by the partner, rather than the partnership, is presumed not to be an ordinary and necessary cost or expense incurred in the conduct of the partnership's business and is therefore not deductible in determining the partner's distributive share of the partnership's business income or loss. This presumption may be rebutted by the partner only if the partner satisfies either of two conditions. First, the partner may attach to his or her gross income tax return a statement signed under penalties of perjury by the partnership's tax matters partner (as defined in IRC §6231(a)(7)), if any, in which the tax matters partner (a) describes in detail the particular costs or expenses to which the statement relates, (b) states that he or she has reasonable grounds to believe that each such cost or expense was an ordinary and necessary cost or expense of the partnership's business and describes in detail the basis for such belief, and (c) states that the partnership's partners have agreed that (1) the economic burden of each such cost or expense is (and will be) borne by the partner who paid it on behalf of the partnership, (2) the partnership has not (and will not) reimburse the partner for the expense, and (3) the partnership has allocated the partnership's deduction for such expense to the individual partner who paid it. Second, the partner may attach to his or her gross income tax other evidence that demonstrates the facts that would have been set forth in a tax matters partner's statement and clearly and convincingly proves that such cost or expense was an ordinary and necessary cost or expense of the partnership's business.

Social Impact

The proposed amendments to N.J.A.C. 18:35-1.14 would effect a substantive change in the Division's requirements for determining a partner's net share of partnership income. The Division's longstanding practice has been to allow a deduction only for ordinary and necessary business expenses paid directly by the partnership itself or reimbursed by the partnership. The proposed amendment outlines a procedure by which a partner might rebut the presumption that expenses paid by the partner, rather than the partnership, are simply personal expenses and therefore not deductible. If the requirements set forth in the proposed N.J.A.C. 18:35-1.14(c)7(i) are satisfied, a partner's unreimbursed business expense may be deducted in determining the individual partner's reportable distributive share of partnership income.

The proposed change will have a beneficial effect on partners whose firms have chosen to allocate the economic responsibility for certain expenses to the individual partners rather than to the partnership as a whole. For example, the change will benefit those partners who may need to spend more money than others in order to meet their obligations to attract clients and generate business for the partnership.

Two changes in the language of N.J.A.C. 18:35-1.14 will have minimal social impact because they merely clarify existing law and practice. The addition of the qualifying "ordinary and necessary" language in paragraph (c)7 makes it clear that the expenses allowed in calculating net profits of a partnership are similar to those allowed in determining net profits of a sole proprietorship. The change in the footnote following subsection (c) simply updates the reference to S corporation income in light of the State's recent recognition of S corporations, pursuant to P.L. 1993, c.173.

The proposed amendments to N.J.A.C. 18:35-1.25 affect taxpayers who operate sole proprietorships and partners who must report their share of partnership business income. However, since these changes merely clarify current statutory law or codify existing policies and procedures of the Division of Taxation, their impact will be minimal. Nevertheless, to the extent that they more effectively inform taxpayers and practitioners, confirming their correct interpretations of the law or correcting any misunderstanding regarding deductible business expenses, they will have some positive social impact.

Economic Impact

The proposed amendments to N.J.A.C. 18:35-1.14 may slightly reduce State revenue, since the distributive share of partnership income reported by some individual partners will now reflect a deduction for unreimbursed business expenses that were previously nondeductible.

The greatest economic impact will be on individual partners who will be able to reduce their distributive share of partnership income by deducting previously nondeductible unreimbursed expenses. As explained in the Social Impact statement, this relaxation of the rules will particularly benefit those partners who need to spend more than others in order to fulfill their client-development and public relations obligations.

By clarifying and codifying existing policies and procedures regarding the deductibility of only "ordinary and necessary" expenses and the full deductibility of allowable expenses which are only partially deductible for Federal purposes, the proposed amendments to N.J.A.C. 18:35-1.25 should promote more accurate reporting of income. However, the impact

You're viewing an archived copy from the New Jersey State Library.

on State revenues and on individual taxpayers will be minimal because the slightly reduced incidence of unintentional over-reporting and under-reporting of business profits will probably offset each other.

Executive Order No. 27 Analysis

Except for the substantiation required to rebut the presumption of nondeductibility of a partner's unreimbursed partnership business expenses, the proposed amendments do not contain requirements that exceed the requirements imposed by Federal law. Most of the amendments simply clarify that certain requirements are the same as those imposed by the Internal Revenue Code. A few of the amendments set forth more relaxed requirements than those imposed by the Internal Revenue Code, specifically by allowing the full deductibility of certain business expenses that are only partially deductible under the Internal Revenue Code, and by allowing the deduction of a partner's unreimbursed expenditures under certain limited circumstances.

The rebuttal procedure is a means for allowing the taxpayer a benefit that he would not otherwise have under Federal law. Under the Internal Revenue Code, the Internal Revenue Service would simply disallow the expense as a business deduction. The taxpayer is not required to provide this rebuttal; he may instead choose to accept the presumption that his unreimbursed expenses are not ordinary and necessary business expenses and therefore not deductible in determining his distributive share of partnership income.

If the taxpayer chooses to rebut the presumption, the burden is quite small. The taxpayer merely has to provide a statement by the tax matters partner (or other evidence) attesting to certain decisions already made by the partnership. Preparation of the statement will probably not even require the services of an accountant. In exchange for this very small burden, the taxpayer will receive a substantial benefit; the right to deduct an expense, thereby lowering his distributive share of partnership income subject to New Jersey gross income tax. Thus, satisfying the somewhat more stringent reporting requirement for the rebuttal allows the taxpayer to be subject to a less stringent tax burden.

For the Division, the cost of this rebuttal requirement will be the employee time required to review the rebuttal statement and determine the deductibility of the expense, and the loss of revenue that will result from allowing the taxpayer to deduct an expense that would ordinarily be disallowed. The rebuttal procedure will benefit the Division because it allows the Division a greater measure of control and reduces abuse and misinterpretation of the rules. Without this clearly defined, codified procedure, some partners who could rebut the presumption may not attempt to do so, while many others who are not entitled to deduct their personal expenses nevertheless do so. Thus, the rebuttal requirement promotes policies of fairness and consistency in the administration of the Gross Income Tax Act.

Regulatory Flexibility Analysis

While the proposed amendments govern the income reportable by individuals, not by businesses, they may have some indirect effect on businesses as well. Businesses indirectly affected will include partnerships and, to a lesser degree, sole proprietorships. A substantial number of these will be "small businesses," as defined by the Regulatory Flexibility Act, N.J.S.A. 52:14B-16 et seq. However, the proposed amendments will not disparately affect small businesses.

The proposed amendment to N.J.A.C. 18:35-1.14 makes it clear that an expense paid by a partner, rather than by the partnership, is presumed to be not an "ordinary and necessary" business expense. But it provides a mechanism by which the partner might rebut this presumption by submitting a statement from the partnership's tax-matters partner (or other evidence) stating that a particular expense was, in fact, an ordinary and necessary expense of the business, which a partners agreed would be borne by individual partners and not reimbursed by the partnership. This change may indirectly affect partnerships themselves to the extent that it influences them to alter their tax-planning strategies by shifting the economic responsibility for some expenditures from the partnership to the individual partners.

Compliance with the amended rules will impose minimal additional record-keeping burdens on small partnerships—only the small burden of having the tax-matters partner provide a statement for an individual partner seeking to deduct unreimbursable business expenses. There will not be a disparate impact on "small" partnerships.

This slightly increased burden will be offset by the simplification of record-keeping and reporting requirements for sole proprietorships and for those partnerships that do not allocate the economic burden of business expenses to individual partners. The amendments to N.J.A.C. 18:35-1.25 make it unnecessary for sole proprietorships to maintain business and personal expense records for New Jersey purposes that are completely different from those required for Federal tax preparation purposes. This is because the amendments clarify that, for purposes of the Gross Income Tax Act, business expenses are "ordinary and necessary" expenses incurred in carrying on a business, as they are under the Internal Revenue Code, and create a presumption that a taxpayer's characterization of an expense on the Federal individual income tax return is deemed to be correct for purposes of New Jersey gross income tax liability as well.

While a business may already use the services of accountants or other tax professionals, the amendments will not necessitate more extensive use of their services. Instead, by creating the presumption that expenses characterized as "business" or as "personal" on a Federal return are deemed to be the same for New Jersey tax purposes, they simplify accounting and reduce the need for professional services. The mechanism for rebutting the presumption does not create an increased need for professional services, since the required statement is written by a partner who simply needs to explain economic decisions that the partnership has already made.

Full text of the proposal follows (additions indicated in boldface **thus**; deletions indicated in brackets [thus]):

18:35-1.14 Partnerships and partners

(a)-(b) (No change.)

(c) The determination of a partner's distributive shares of the partnership's items of gross income shall be as follows:

1.-6. (No change.)

7. [In] **Only ordinary and necessary expenses incurred by a partnership in the conduct of its business are deductible for purposes of** determining a partner's distributive share of partnership **business** income or loss **to be reported with respect to such partnership for Gross Income Tax purposes** [, no deduction is allowed for expenses which are not incurred by the partnership]. **Further, it is presumed that a cost or expense paid by a partner, rather than by such partnership, is not an ordinary and necessary cost of expense incurred in the conduct of such partnership's business and therefore is not deductible in determining such partner's distributive share of such partnership's business income or loss. This presumption may be rebutted by the partner only if the partner satisfies the conditions set forth in either (c)7i or ii below:**

i. The partner attaches to his or her Gross Income Tax return a statement signed under penalties of perjury by such partnership's tax matters partner (as defined in I.R.C. §6231(a)(7)), if any, other than the partner himself or herself, in which such tax matters partner:

(1) Describes in detail the particular costs or expenses to which the statement relates (including the amount of each such cost or expense);

(2) States that he or she has reasonable grounds to believe that each such cost or expense was an ordinary and necessary cost or expense of such partnership's business and describes in detail the basis for such belief; and

(3) States that such partnership's partners have agreed that:

(A) The economic burden of each such cost or expense is (and will be) borne by the partner who paid it on behalf of the partnership;

(B) The partnership has not (and will not) reimburse the partner therefor; and

(C) The partnership has allocated to the partner who paid such cost or expense the partnership's deduction therefor.

ii. The partner attaches to his or her Gross Income Tax return such evidence as:

(1) Demonstrates the facts described in (c)7i above that would be set forth in a tax matters partner's statement; and

(2) Clearly and convincingly proves that such cost or expense was an ordinary and necessary cost or expense of such partnership's business.

8. The provisions of this section are illustrated by the following examples:

Examples 1-3: (No change.)

You're viewing an archived copy from the New Jersey State Library.

Example 4: The Federal Form Schedule K-1 (Form 1065) issued to a partner of a partnership actively engaged in the practice of medicine contained the following information:

Partnership net ordinary income (all of which is derived from business activities):	$25,000
Interest Income realized on money market accounts holding required working capital	300
Interest income realized on security deposits held by lessors pertaining to medical equipment leased by the partnership and used in its trade or business	100
Portfolio (i.e., non-business) income:	
Interest (Includes $500 from U.S. Treasury bills and does not include $300 from New York State bonds held by the partnership):	1,800
Dividends:	1,200
Royalties:	500
Net long term capital gain:	600
Gain on the sale of property described in I.R.C. §1231	400

The taxpayer will report this information on his NJ-1040 as follows:

Distributive share of partnership income:		
Business ordinary income	$25,000	
Interest on working capital	300†	
Interest on security deposits	100	
Net distributive share of partnership income reportable on NJ-1040		$25,400
Interest:	$1,800	
Adjustments:		
Less interest income from U.S. Treasury bills	(500)	
Plus interest income from New York	300	
Interest income reportable on NJ-1040		1,600
Dividends:		1,200
Net income from rents, royalties, etc.:		500
Gains from disposition of property:	600	
Long term capital gain		
§1231 gain	400	
Net gains from dispositions of property		1,000

†Note: Interest income realized by the partnership with respect to its working capital and security deposits may be taken into account in determining the partnership's net income or loss from trade or business only if **either i, for taxable years ending before December 31, 1994**, the partnership annexes to **the copy of** its **Federal** tax return **filed with the Division** the statement described in N.J.A.C. 18:35-1.14(f)4, **or ii, for taxable years ending on or after December 31, 1994, the partnership annexes to its New Jersey partnership return filed with the Division the statement described in N.J.A.C. 18:35-1.14(f)4**. Absent such statement, the interest income **will be conclusively deemed to be nonbusiness interest that** must be separately reported as "interest" by the partnership and that [will be] **is** taxable to the partners as "interest" **under N.J.S.A. 54A:5-1e**.

Example 5: (No change.)

Example 6: Taxpayer is a partner in two partnerships. Partnership A is a medical partnership and Partnership B is a securities partnership. Each partnership's activities constitute an active trade or business. The Federal Schedules K-1 (Form 1065) issued to the taxpayer by the partnerships contained the following information:

	Partnership A	Partnership B
Partnership Net Ordinary Income:	$100,000†	($240,000)†
Other income:		
Interest:	5,000††	1,000†
Dividends:		25,000†
Capital gain:	2,000††	20,000†
Net gain or loss under I.R.C. §1231:		(5,000)††
The taxpayer also incurred with respect to his partnerships the following unreimbursed business expenses:	15,000	8,000

The taxpayer did not attach to his Gross Income Tax return either the statement signed by the partnership's tax matters partner that is described in N.J.A.C. 18:35-1.14(c)7i or sufficient evidence to satisfy the requirements of N.J.A.C. 18:35-1.14(c)7ii. Accordingly, these unreimbursed expenses are not deductible by the partner in determining his distributive share of business income from either partnership for Gross Income Tax purposes.

†Business income

††Non-business income.

The taxpayer will report this information on his NJ-1040 as follows:

Partnership A			
Partnership ordinary income		100,000	
Partnership B			
Partnership net ordinary income	(240,000)		
Interest	1,000		
Dividends	25,000		
Capital gain	20,000		
		(194,000)	
		(94,000)	
Distributive share of partnership income:			0†
Interest income (Partnership A):			5,000
Gains from disposition of property:			
Capital gain (Partnership A):	12,000		
§1231 loss (Partnership B):	(5,000)		
Net gain from disposition of property:			7,000

†Note: Taxpayer would report "0" on the line of his NJ-1040 calling for the taxpayer's distributive share of partnership income. However, if the taxpayer had been a partner of a third partnership, up to $94,000 of the partner's distributive share of income realized by the third partnership from the conduct of a trade or business could be offset by the net $94,000 loss form Partnerships A and B.

Example 7: The Federal form Schedule K-1 (Form 1065) issued a New Jersey resident partner of a partnership actively engaged in the practice of law in New York contained the following information:

Partnership net ordinary income:	$10,000
Guaranteed payments:	5,000
Interest (Includes $2,000 from U.S. Treasury bills and does not include $2,000 from New York State bonds) (non-business):	5,000
Net gain under I.R.C. §1231:	4,000
I.R.C. §179 deduction:	1,000
Taxes based on income (UBT):	2,000
Expense incurred to carry New York State bonds:	1,000
Keogh deduction	2,000
[Charitable contributions (non-business)]	[3,000]
Payments to charities described in I.R.C. §170(c) that are classified by the partnership on its Federal income tax return as charitable contributions deductible under I.R.C. §170	**3,000**

The taxpayer also incurred unreimbursed business expenses with respect to his **or her** partnership in the amount of $3,000. **The taxpayer attached to his or her Gross Income Tax return a statement signed by the partnership's tax matters partner that satisfied the**

You're viewing an archived copy from the New Jersey State Library.

conditions set forth in N.J.A.C. 18:35-1.14(c)7i. Accordingly, these unreimbursed expenses are deductible by the partner in determining his distributive share of partnership income for Gross Income Tax purposes.

The taxpayer will report this information on his NJ-1040 as follows:

Partnership net ordinary income	$10,000		
Guaranteed payments	5,000		
		$15,000	
Adjustments			
Unreimbursed partnership business deductible pursuant to N.J.A.C. 18:35-1.14(c)7		**(3,000)**	
Taxes Based on Income		2,000	
§179 Deduction		(1,000)	
Distributive share of partnership income:			**13,000†**
			[16,000†]
Interest income			
Adjustments:	5,000		
Interest income from U.S. Treasury bills	(2,000)		
Interest income from New York State bonds	2,000		
Net adjustments:		-0-	
Interest:			5,000††
Net Gains from the disposition of property:			
§1231 Gain			4,000

†Note: Keogh Plan contributions for partners[, charitable contributions not deductible under I.R.C. §162] **and payments to charities described in I.R.C. §170(c) that are classified by the partnership on its Federal tax return as charitable contributions deductible under I.R.C. §170, rather than as ordinary and necessary business expenses deductible under I.R.C. §162** [and unreimbursed business expenses] are not deductible for Gross Income Tax purposes. **The partner may deduct the unreimbursed partnership business expenses because the requirements of N.J.A.C. 18:35-1.14(c)7i were satisfied. If the requirements of neither N.J.A.C. 18:35-1.14(c)7i nor ii had been satisfied with respect to the unreimbursed business expenses, then such expenses would not have been deductible by the partner in determining his distributive share of the partnership's income or loss and he would have been required to report $16,000, rather than $13,000, as the amount thereof.**

††Note: The cost to carry the New York State bonds cannot be deducted because the expense was not incurred in the ordinary course of a trade or business conducted by the partnership.

Example 8: The taxpayer is a New Jersey resident who is a partner in two partnerships. Partnership A is a New York based securities partnership and Partnership B is a New Jersey based accounting partnership. Each partnership's activities constitute an active trade or business. The Federal forms Schedule K-1 (Form 1065) issued to the taxpayer by the partnerships contained the following information:

	Partnership A	Partnership B
Partnership Ordinary Income:	($10,000)†	[($15,000)†]
(This reflects payments by partnership B to charities described in I.R.C. §170(c) that were not classified by partnership B on its Federal tax return as charitable contributions deductible under I.R.C. §170 and were instead properly classified thereon as ordinary and necessary business expenses deductible under I.R.C. §162. These payments were therefore deducted in determining the partnership's ordinary income, a portion of which was allocated to the partner at line 1 of his or her Federal Schedule K-1 for Partnership B)		**($18,000)**
Guaranteed payments:	2,000	
Interest:	8,000†	3,000††
Interest from U.S. Treasury Bills included in the interest above	7,000†	
Interest from Pennsylvania State bonds not included in interest above	5,000†	
Dividends:	5,000†	
Net short term capital gains or losses:	(2,000)†	
Net long term capital gains or losses:	18,000†	(1,000)††
Net Gain under §1231:	1,500††	
Taxes based on income (UBT):	2,500†	
Cost to carry Pennsylvania bonds:	1,000†	
Keogh deductions:	2,000	
[Charitable contribution incurred as a business expense]		[(3,000)]

†Business income

††Non-business income.

The taxpayer is also a shareholder in a New York S corporation. The Schedule K-1 issued by the S corporation showed an ordinary loss of ($5,000)†.

The taxpayer will report this information on his NJ-1040 as follows:

Partnership A			
Partnership ordinary income	(10,000)		
Guaranteed payments	2,000		
Interest	8,000		
Dividends	5,000		
Net short term capital loss	(2,000)		
Net long term capital gain	18,000		
		$21,000	
Adjustments:			
Interest income from U.S. Treasury Bills	(7,000)		
Interest income from Pennsylvania State Bonds	5,000		
Taxes based on income	2,500		
Cost to carry Pennsylvania bonds	(1,000)		
		(500)	
Distributive share of partnership income from Partnership A:			20,500
Partnership B			
Partnership ordinary income		[(15,000)]	
(This reflects payments by partnership B to charities described in I.R.C. §170(c) that were not classified by partnership B on its Federal tax return as charitable contributions deductible under I.R.C. §170 and were instead properly classified thereon as ordinary and necessary business expenses deductible under I.R.C. §162 and that therefore were deducted in determining the partnership's ordinary income a portion of which was allocated to the partner at line 1 of his Federal Schedule K-1 for Partnership B)		**($18,000)**	

You're viewing an archived copy from the New Jersey State Library.

[Charitable contribution incurred as a business expense]	[3,000]	
Adjustments:	-0-	
Distributive share of partnership loss from Partnership B		(18,000)
Distributive share of partnership income:		2,500
Interest (Partnership B):		3,000
Gains from disposition of property:		
Net gain under §1231 (Partnership A)	1,500	
Net long term capital loss (Partnership B)	(1,000)	
Net gains from the disposition of property:		500

†Note: [S Corporation status is not recognized for New Jersey Gross Income Tax purposes. An S Corporation shareholder's share of the corporation's loss is not deductible for New Jersey Gross Income Tax purposes.] **In accordance with N.J.S.A. 54A:5-1(p), effective July 7, 1993, S Corporation income or loss is reported for Gross Income Tax purposes as net pro rata share of S corporation income. Prior to this date, the Gross Income Tax did not recognize S corporations. Under N.J.S.A. 54A:5-1(p), S corporation income or loss is a separate category of income that cannot be netted with partnership income, net profits from business, or any other category of income set forth in N.J.S.A. 54A:5-1.**

(d)-(g) (No change.)

(h) The following apply to Keogh Plans:

1. (No change.)

2. [Partnership contributions to a Keogh Plan made on behalf of a partner are not deductible business expenses. Such contributions are to be taken into account in determining the distributive shares of partnership income of the individual partners for New Jersey gross income tax purposes in the taxable years in which they are contributed to the Keogh Plan. Previously taxed employer contributions to a Keogh Plan are not subject to tax when subsequently withdrawn by the partners.] **A partnership's contribution to a Keogh Plan account for the benefit of a partner is not a deductible business expense of the partnership for New Jersey Gross Income Tax purposes. Accordingly, the amount of such a contribution shall be included in the partner's distributive share of partnership income or loss of such partnership for the year in which the contribution is made by the partnership. A previously taxed partnership contribution to a partner's Keogh Plan account is not subject to the Gross Income Tax when withdrawn from that account by the partner or the partner's beneficiaries.**

3.-4. (No change.)

18:35-1.25 Net profits from business

(a)-(b) (No change.)

(c) A taxpayer's net profits from business shall be determined by taking into account all costs and expenses incurred in the conduct thereof **that are ordinary and necessary costs and expenses of such business**, except no deduction shall be allowed for taxes based on income; any civil, civil administrative or criminal penalty or fine assessed and collected for a violation of a state or Federal environmental law, or any other assessment described in N.J.S.A. 54A:5-1b(2); or any treble damages paid pursuant to N.J.S.A. 58:10-23.11fa. No deduction shall be allowed for any expense or loss which is not incurred in the ordinary **and necessary** course of the conduct of the taxpayer's trade or business. **If a payment is classified on a Federal tax return (Form 1040 in the case of an individual or Form 1065 in the case of a partnership) as other than an ordinary and necessary expense of the business that is either fully deductible for Federal income tax purposes or that would be fully deductible for such purposes but for a Federal limitation on the deductibility of an expense of that kind, then, barring either a successful challenge to such treatment by the Internal Revenue Service or the Division of Taxation, or the timely filing of an amended Federal tax return on which such classification is changed and the acceptance of such amendment by both the Internal Revenue Service and the Division of Taxation, such payment shall be conclusively presumed not to be deductible as a cost or expense of the business, profession or other activity for New Jersey Gross Income tax purposes because such reporting indicates that the owner of the business did not deem the cost or expense to be an ordinary and necessary expense of the business. For example, if a payment to a charity or other organization described in I.R.C. §170(c) is classified on an individual taxpayer's Federal income tax return as a charitable contribution deductible under I.R.C. §170, then, barring either a successful challenge to such treatment by the Internal Revenue Service or the Division of Taxation, or the timely filing by such individual of an amended Federal tax return on which such classification is changed and the acceptance of such amendment by both the Internal Revenue Service and the Division of Taxation, such payment shall be conclusively presumed not to be deductible as a cost or expense of the taxpayer's business, profession or other activity for New Jersey Gross Income tax purposes because such reporting indicates that the taxpayer did not deem the cost or expense to be an ordinary and necessary expense of his business.**

(d) A taxpayer's net profits from business shall be determined in accordance with the method of accounting utilized in reporting the taxpayer's business income or loss for Federal income tax purposes.

1. (No change.)

2. A taxpayer's net profits from business shall be determined by taking into account those **ordinary and necessary** expenses [or losses] incurred in the conduct of the taxpayer's trade of business [which are properly deductible in accordance with the taxpayer's method of accounting], even if such deductions relate to expenses incurred in generating business income exempt from taxation under the Gross Income Tax Act[, or expenses which are partly or wholly nondeductible for Federal Income tax purposes under rules which limit the deductibility of particular business expenses under the Internal Revenue Code]. **Ordinary and necessary expenses the deductibility of which are limited under the Internal Revenue Code are fully deductible under the Gross Income Tax Act.** For example, **ordinary and necessary** meal and entertainment expenses incurred in the conduct of a trade or business are fully deductible in determining a taxpayer's net profits from business for Gross Income Tax purposes.

(e) (No change.)

(a)

DIVISION OF TAXATION

Savings Institution Tax Act Rules

Proposed Readoption: N.J.A.C. 18:36

Proposed New Rule: N.J.A.C. 18:36-1.5

Authorized By: Richard D. Gardiner, Director, Division of Taxation.

Authority: N.J.S.A. 54:50-1, 54:10D-14 and P.L. 1979, c.160, §4.

Proposal Number: PRN 1995-82.

Submit comments by March 8, 1995 to:
Nicholas Catalano
Chief, Tax Services
Division of Taxation
CN-269
Trenton, NJ 08646

The agency proposal follows:

Summary

Pursuant to Executive Order No. 66(1979), N.J.A.C. 18:36 expires on March 19, 1995. The Division of Taxation has reviewed the rules and determined them to be necessary, reasonable and proper for the purpose for which they were originally promulgated as required by the Executive Order. The readoption of these rules becomes effective upon acceptance for filing by the Office of Administrative Law of a notice of adoption.

In New Jersey, savings banks, savings and loan associations and building and loan associations were not subject to State taxation until the

You're viewing an archived copy from the New Jersey State Library.

enactment of The Savings Institution Tax Act, P.L. 1973, c.31 (N.J.S.A. 54:10D-1 et seq.). The Act was amended by P.L. 1979, c.160.

Pursuant to statutory authority, the Division of Taxation promulgated rules at N.J.A.C. 18:36, in order to implement the statute and to set forth the Division's position with regard to certain transition provisions. The rules in N.J.A.C. 18:36 contain requirements regarding the rate of tax, how income of certain interest or dividends shall be considered, partial payments, and the accounting method used.

The Division of Taxation has reviewed these rules and has found them in need of revision and amendment, due to the enactment of provisions of the Clean Air Act. Accordingly, a new rule is proposed at N.J.A.C. 18:36-1.5, referring to the credit available to eligible taxpayers under the Employee Trip Reduction program.

Social Impact

Savings banks, building and loan associations and savings and loan associations are generally referred to as thrift institutions. They are generally depositories for small depositors, savers or customers. Deposits are often used by these institutions in the funding of mortgages on real property. The present tax rate of three percent upon net income will generally produce a lesser tax for such thrift institutions than would liability for tax payments under the Corporation Business Tax Act. Commercial banks are subject to the Corporation Business Tax Act, N.J.S.A. 54:10A-1 et seq. Legislation was enacted so that some of the tax burden of financial institutions be shared by savings banks, savings and loan associations, and building and loan associations, which are competitors of commercial banks, while encouraging such thrift institutions to continue to serve their savings and mortgage customers by allowing for a lesser tax.

Economic Impact

Based on the State of New Jersey's fiscal year, below appear State revenue collections for these taxpayers as published in the Annual Report, 1992-1993, for the Division of Taxation:

1991	$ 6,655,203
1992	15,325,819
1993	24,389,625

Executive Order 27(1994) Statement

The Savings Institution Tax Act in its definition of "net income" defines that term with reference to the amount of taxable income, before net operating loss and special deductions which the taxpayer is required to report Federally. N.J.S.A. 54:10D-2d.

While the statute enacted by the Legislature refers to Federal law as a starting point for certain calculations required to compute State tax liability and, therefore, there may be different standards and requirements being imposed in the calculation of applicable Federal and State tax on a subject taxpayer, the rule proposal does not regulate any area in which Federal standards or requirements apply.

Regulatory Flexibility Analysis

The rules proposed impose accounting requirements on small businesses, as the term is defined in the Regulatory Flexibility Act, N.J.S.A. 52:14B-16 et seq. The rules must apply to small businesses as well as to businesses employing more than 100 people, as required by statute, and requires no professional services beyond those commonly used in such businesses. The compliance requirements in the rules must be applied to taxpayers uniformly; any action to exempt taxpayers who may be small businesses, as they are defined in the Regulatory Flexibility Act, would not be in compliance with applicable tax statutes.

Full text of the proposed readoption may be found in the New Jersey Administrative Code at N.J.A.C. 18:36.

Full text of the proposed new rule follows:

18:36-1.5 Tax credit; commuter transportation benefits

Taxpayers may be eligible for a credit against tax for a portion of the cost of commuter transportation benefits for the relevant accounting or privilege period pursuant to N.J.S.A. 27:26A-15 and rules promulgated thereunder.

OTHER AGENCIES

(a)

ELECTION LAW ENFORCEMENT COMMISSION

Notice of Change of Public Hearing Date
Contribution Reporting; Contribution Limits
Proposed New Rules: N.J.A.C. 19:25-10
Proposed Amendments: N.J.A.C. 19:25-1.7, 9.2 and 9.3
Proposed Repeal and New Rules: N.J.A.C. 19:25-11

Take notice that the date of the public hearing concerning the proposal concerning contribution reporting and contribution limits, published in the January 17, 1995 New Jersey Register at 27 N.J.R. 312(a) and announced as Tuesday, February 21, 1995, has been changed to Tuesday, February 14, 1995, at 10:00 A.M. The location of the hearing is:

Somerset County Administration Building
Engineering Conference Room, 2nd Floor
20 Grove Street
Somerville, New Jersey

To reserve time to speak, telephone the Commission offices at (609) 292-8700 by Thursday, February 9, 1995. The Commission regrets any inconvenience caused by the change of date.

You're viewing an archived copy from the New Jersey State Library.

RULE ADOPTIONS

AGRICULTURE

(a)

DIVISION OF ANIMAL HEALTH

Biological Products for Diagnostic or Therapeutic Purposes

Adopted New Rules: N.J.A.C. 2:6

Proposed: September 19, 1994 at 26 N.J.R. 3784(a).
Adopted: January 13, 1995 by State Board of Agriculture and Arthur R. Brown, Jr., Secretary, Department of Agriculture.
Filed: January 13, 1995 as R.1995 d.83, without change.

Authority: N.J.S.A. 4:5-107 et seq.

Effective Date: February 6, 1995.
Expiration Date: February 6, 2000.

Summary of Public Comments and Agency Responses:

COMMENT: Only one letter of comment was received. That came from the New Jersey Veterinary Medical Association which commented that the veterinary profession in New Jersey supported the previously proposed version of the rules, dated November 15, 1993 (see 25 N.J.R. 4985(a)) which proposed that all biologics be restricted to use by or on the order of licensed veterinarians.

RESPONSE: The State Board of Agriculture adopted the proposed rules, without change, as published in the New Jersey Register, Volume 26, Number 18, dated September 19, 1994 (see 26 N.J.R. 3784(a)).

The requirement that all biologics be restricted to use by or on the order of licensed veterinarians which is preferred by the Veterinary Medical Association and which was previously proposed November 15, 1993, would have required a prescription from a licensed veterinarian to purchase and use biologics. That proposed requirement was opposed by the livestock industry since it was perceived to be too restrictive and perhaps more costly since the prescription would be required. The State Board of Agriculture agreed with the livestock industry that such a restriction was not needed and proposed the new rule without that proviso. The Division notes that the comment from the Veterinary Medical Association does not oppose the new rule but restates the case for the more restrictive version proposed in November 1993.

Executive Order No. 27 Statement

An Executive Order No. 27 analysis is not required because the rulemaking requirements of the Division of Animal Health, New Jersey Department of Agriculture, are dictated by the Biological Products for Diagnostic or Therapeutic Purposes Act, N.J.S.A. 4:5-107, et seq., and are not subject to any Federal requirements or standards.

Full text of the adoption follows:

CHAPTER 6
BIOLOGICAL PRODUCTS FOR DIAGNOSTIC OR THERAPEUTIC PURPOSES

SUBCHAPTER 1. BIOLOGICAL LICENSING

2:6-1.1 Definitions

The following words and terms, when used in this chapter, shall have the following meanings, unless the context clearly indicates otherwise.

"Accredited veterinarian" means any licensed Doctor of Veterinary Medicine who has fulfilled the requirements for Federal and State accreditation, pursuant to 9 C.F.R. §§160.1 et seq. in the State of New Jersey.

"Biological product" or "biologic," "biological" and "biological drug" mean any product utilizing virus (whether active or inactive) or any molecular part thereof, bacteria or any genetic equivalent thereof, or toxin as its basic component, or any product derived from the serum of any other animal, in the diagnosis (diagnostic biologic) or prevention (prophylactic biologic) of animal disease. This includes any and all products covered by the Animal Virus, Serum, and Toxin Act, 21 U.S.C. §§151 et seq., and the regulations issues pursuant thereto, 9 C.F.R. §§101.1 et seq.

"Diagnostic biologic" means a preparation of bacterial, viral or parasitic agents, products, factions, serums, or fractions of serums utilized to determine experience with a disease causing agent.

"Director" means the Director, Division of Animal Health, New Jersey Department of Agriculture.

"Distribution" means the preparation, sale, barter, exchange, or giving away of any regulated product.

"Domestic animal" means any and all animals other than humans.

"Licensed veterinarian" means a Doctor of Veterinary Medicine licensed by the New Jersey Board of Veterinary Medical Examiners, pursuant to N.J.S.A. 45:16-1 et seq., and the rules issued pursuant thereto, N.J.A.C. 13:44, to practice veterinary medicine, surgery, and dentistry in the State of New Jersey.

"Person" means any individual, corporation, institution or partnership.

"Prophylactic biologic" means any and all vaccines or toxoids used to initiate immunity against disease in domestic animals.

2:6-1.2 Distribution of biologics

(a) Unless otherwise stated, all United States Department of Agriculture (U.S.D.A.) licensed biologics may be distributed and used according to the terms of this chapter.

(b) No U.S.D.A. unlicensed or conditionally licensed biologic or diagnostic biologic shall be distributed without the written permission from the Director.

2:6-1.3 Procedure for State license or permit

(a) License or written permission to distribute, use, sell, or give away a biological product unlicensed by or conditionally licensed by the USDA shall be granted by the Director upon a showing to the Director's satisfaction in writing of:

1. The purpose, purity, safety, potency and efficacy of the product;
2. The procedures to insure (a)1 above;
3. Reporting procedures to track the product; and
4. The credibility and reliability of the person applying for the license, based on their credentials and past performance in handling these materials.

(b) License or written permission to distribute, use, sell, or give away a biological product shall be granted by the Director for more than one biological product upon a showing, to the satisfaction of the Director in writing, of the need for scientific research or testing.

2:6-1.4 Use of biological products, diagnostic biologics and prophylatic biologics

(a) Only U.S.D.A. licensed biological products or those biological products authorized in accordance with N.J.A.C. 2:6-1.2 or 1.3 shall be used in New Jersey.

(b) The use of biologic products is subject to the following restrictions:

1. Brucella Abortus and contagious ecthyma vaccines shall be administered only by accredited veterinarians; and
2. Diagnostic biologics for the following diseases are limited to use by the New Jersey Department of Agriculture, Division of Animal Health only, unless specific written permission is granted by the Director, for in vitro diagnosis of:
   i. Anaplasmosis
   ii. Avian Influenza
   iii. Brucellosis
   iv. Equine Infectious Anemia
   v. Equine Viral Arteritis
   vi. Paratuberculosis (Johne's Disease).
   vii. Pseudorabies
   viii. Pullorum

(c) Exceptions to (b)2 above may be granted by the Director to other government agencies who may be cooperating with the New Jersey Department of Agriculture, or where in the opinion of the Director, there is an emergent situation requiring immediate action.

You're viewing an archived copy from the New Jersey State Library.

2:6-1.5 Revocation of license or permission to distribute or use

(a) A license or permission to distribute or use any biological product may be revoked by the Director when there has been a violation of State or Federal laws, rules or regulations, or where the public health, welfare or safety shall warrant such revocation, subject to notice and opportunity to be heard.

(b) Any hearing to be conducted under this section shall be so conducted pursuant to N.J.A.C. 2:1-3.4 and the Administrative Procedure Act, N.J.S.A. 52:14B-1 et seq. and the Uniform Administrative Procedure Rules, N.J.A.C. 1:1.

PERSONNEL

(a)

MERIT SYSTEM BOARD

Layoffs

Readoption: N.J.A.C. 4A:8

Proposed: September 6, 1994 at 26 N.J.R. 3518(a).

Adopted: December 20, 1994 by the Merit System Board, Linda M. Anselmini, Commissioner, Department of Personnel.

Filed: December 30, 1994 as R.1995, d.55, **without change, but with the proposed amendments not adopted at this time.**

Authority: N.J.S.A. 11A:2-6(d), 11A:2-11(h), 11A:4-7, 11A:4-9, 11A:4-12, 11A:6-28, 11A:8-1 through 8-4.

Effective Date: December 30, 1994.

Expiration Date: May 20, 1995.

Summary of Hearing Officer Recommendations and Agency Responses:

Public hearings on the proposed readoption with amendments were held on September 22, September 29 and October 4, 1994. Henry Maurer served as hearing officer. Seventy-one persons presented comments at the hearings. In addition, 136 persons presented written comments. Mr. Maurer recommended that the rules be readopted without amendments for a limited period, to allow additional time to draft amendments. The record of the public hearings may be reviewed by contacting Janet Share Zatz, Director of Appellate Practices and Labor Relations, Department of Personnel, CN 312, Trenton, New Jersey 08625.

Summary of Public Comments and Agency Responses:

The following persons presented comments at the public hearings:

Vicki Marshall, Secretary, CWA Local 1037; George Babula; Rene Demunyck; Kathy Wood, Hudson Branch Manager, Heightened Independence and Progress Program; Barbara Wells (on behalf of Thomas Baffuto, Director, Project HIRE); Phyllis Salowe-Kaye, Executive Director, New Jersey Citizen Action; Cathy Danatos; Abby Demel, President, CWA Local 1031; Leslie Pollard; Bobbie Speights; Elisa Riordan, Administrative Assistant to the Vice President, CWA District 1; Hetty Rosenstein, Executive Vice President, CWA Local 1037; Nellie Willis, President, AFSCME Local 2318; Coty Blank; Betsy Guarducci, President, OPEIU Local 312; Najm Muhammed; Betsy Lynch, Public Sector Managers' Association; Bob Pursell, Area Director, CWA; Charles Goldstein, AFSCME Council One; Jim Tarlau, Treasurer, CWA Local 1032; Gloria Church; Jon Wineland, CWA Local 1033; Carolyn Ayres; Bruce Yellin; Ava Johnson; Janice Swierczek; Gene Glazer; Gerald Gioglio; Hazel Dellavia, Staff Representative, CWA; Denice Hunt; Roy Koons; Pat Kolesky; Calla Smordan; Barry Miller; Sara Stackhouse; Rose Reiss; Ted Eifferman; Chris Manns; Kevin Mattis, President, SEIU Local 518; Mike Falco, SEIU Local 518; Connie Visconte, Treasurer, IFPTE Local 195; Lisa Krongold, Business Representative, IFPTE Local 195; George Norcross, President, Camden County AFL-CIO; Paul Harris, President, Camden County East NAACP; Rae Roeder, CWA; George Geist, Assemblyman, 4th District; Ed Hanna, IFPTE Local 195; Rick Engler, Vice President, Industrial Union Council, AFL-CIO; Sarah McCullough; John Borek, President, Retirees Club, IFPTE Local 195; Bill Shawlot, IFPTE Local 195; Thomas O'Neill, IFPTE Local 195; Carmella Conn, CWA Local 1031; Greg Stroemel; Roosevelt Nesmith, Southern Regional Coordinator, NAACP; Henry Dunn, President, Council 10; Robert Little, AFSCME District One, Peter Tortoreto, Probation Association of New Jersey; Fred Samson; Jeffrey Oderick, AFSCME Local 23; Mary Connelly; Gary Mikus; D.J. Murphy; Jim Forlines; Monica Malone; Virginia Wolf, CWA Local 1038; Laura Zakrewski, CWA Local 1038; Helen Eisele; Eileen McGinley; Peter Himchek; and Bill Andrews.

The following persons presented written comments:

Steven Lubow; Sharon McLelland; Homer Wilcox; Robert J. Hoch, Jr.; Lisa Krongold, Business Representative, IFPTE Local 195; Don Buchanan, Vice President, IFPTE Local 195; Glenn R. Savary; Robert Gordon; Anthony Ciallella; Dave Salewski; Thomas Kaczoroski; Francis Hillman; John P. Schmitt; M. Palmer; Elizabeth Kamerdze, James A. Maher; James M. Evanochko; Mae Lang, AFSCME Council One; Fred Sickels; O.K. Ugorji; Bernice Zickwolf; Ralph Smith; Barry B. Miller; Barry Chalofsky; Swati Toppin; Paul Nutkowitz; Sheila Bryan; Josette Carter; Thomas A. Amidon; Thomas Baffuto, Director, Project HIRE, ARC of New Jersey; Mary Kaczoroski; Susan Boehm; Lydia Kirschenbaum; Joseph J. Doherty; Warren Loder; Ann Charles; D. Jeanne Denes; Gary Lipsius; Suzanne Ficara; Robert Singer, Mayor, Lakewood Township; Joseph Yuhas, Assemblyman, 15th District; Hetty Rosenstein, Executive Vice President, CWA Local 1037; Kathy Tazza; Richard Dodson, Director of Human Resources, Camden County; Michael DeTalvo; Natalie Havran, Director of Human Resources, Department of Transportation; John Kashner; John Kaszyc-Rank; Tzay-Rong Jeng; Patrick DiMattia, Director of Human Resources, Office of the Public Defender; Bill Kane, President, Industrial Union Council, AFL-CIO; George Norcross, President, Camden County AFL-CIO; R. Patlolla; Gwen Morris; Ed Frankel; Mary A. Hrenda; Elizabeth Fernandez-Obregon; Andrew Chapman, Executive Vice President, Elizabethtown Water Company; Robert Becker, Esq., representing the New Jersey Law Enforcement Supervisors Association; Valerie Holman, President, Affirmative Action Officers' Council; D. Craig Stevens, Director of Personnel, Department of Environmental Protection; Thomas Kearns, President, Public Sector Managers' Association; Robert Oberthaler; Anthony Durkin; John Gozay; Wayne Chatten Sr.; Mark Kalla; Kathleen Adams; Michelle Morrison; Mary Trout; William Vanover; Joseph DiMotta; Chris Untisz; Joann McCloskey; Michael Danielson; Charles Davis; Sandra Remboske; Barbara Hirst; Ching Volpp; Sondra Rosenblatt; Ferdinard Scaccetti; Peggy Silverman; Joanne Juniak; Miriam Coleman; Catherine Pomerantz; Jennifer Meyer; Debra Gilfillan, H.S. Witz; Beverly Whetstone; David Schiner; John Laurita; Faye E. Hollender; Frederick Lowe, Jr.; Thomas McKee; Rita Thornton; David Burke; Diane Groth; Juanita Smith; Kenneth Petrone; Joseph Ludovico; Jay Nickerson; William J. Hadsell, Jr.; Sharon Bruder; John Graham; Rosemary Lafferty; Holly J. Candia; Michael Nuskey; John Kasner; Charles Letts; Peg Silverman; Joseph F. Aiello; Patricia Blinn; Deborah E. Echt; Daniel Abramovitz; William Ulrich; Monica Malone; Gerald Gioglio; Theodore C. Jones, Jr.; Mary Ann Leschinski; Bonnie J. Zimmer; Mary Jo M. Aiello; Megan Hnath-Brown; John Tolleris; Mary Anne Goldman; Daniel V. Will; Ralph Lollar; John Preczewski; Adolfo DeMarco; Anne Pavelka; Leon Skowronski; Bruce Yellin; Marcella Ford; Donna Younkin; Jean Powers; Karl M. Frank II; and two anonymous comments.

COMMENT: In N.J.A.C. 4A:8-1.2, Alternatives to layoff, one person commented that the phrase "as appropriate" should be deleted from (a), and urged that the word "should" be changed to "shall" in (b). Another person commented that the Department of Personnel should provide greater details on alternatives to layoff.

COMMENT: In N.J.A.C. 4A:8-1.3, five persons stated that pre-layoff actions should be mandatory, not permissive, in order to lessen the need for layoffs.

COMMENT: One person supported the proposed addition of N.J.A.C. 4A:8-1.3(a)4, providing for reducing workweeks as a pre-layoff action. However, 17 persons objected to this amendment, stating that it amounted to a substantial reduction in pay without negotiations.

COMMENT: Two local government representatives opposed the requirement in N.J.A.C. 4A:8-1.4(a)7 that a "detailed explanation" of pre-layoff and alternative measures be provided. They also objected to the provision in N.J.A.C. 4A:8-1.4(e) that the Department of Personnel provide union representatives with a copy of the layoff plan. One union representative stated that copies of the layoff plans should be provided to the unions when they are submitted by the appointing authorities, not after they are approved by Department of Personnel.

COMMENT: In N.J.A.C. 4A:8-1.6, two appointing authority representatives objected to the proposed amendment to (a) requiring personal service of layoff notices unless the employee is on a leave of absence or otherwise unavailable.

You're viewing an archived copy from the New Jersey State Library.

COMMENT: Six persons opposed the proposed N.J.A.C. 4A:8-2.2(d), providing that employees serving in a specialized credential variant title shall have rights based upon the special credential. The commenters argued that layoff rights should be based solely on the title held by the employee.

COMMENT: Ten persons expressed support for the proposed amendment to N.J.A.C. 4A:8-2.2(a), concerning the change to county-wide job locations. Eight other persons supported this change, but argued that employees should not be given the option to exercise bumping rights within the municipality in which the facility or office is located. Nineteen persons objected to the proposed amendment, citing reduced options that would be available to employees affected by a layoff. Some of the objectors also said the amendment would have an adverse effect on individual with disabilities, who may have difficulty reaching a different work site.

COMMENT: Forty-nine persons objected to the proposed amendment to N.J.A.C. 4A:8-2.2(f), providing that demotional rights to a previously held title are available only if the title was held no more than 10 years prior to the effective date of the layoff. Some of those objecting said the change would have an adverse impact on older workers. Others expressed their disagreement with the justification provided in the Social Impact Statement, which stated that due to job changes, an employee may have difficulty performing a job last performed many years ago. Seven persons also objected to further limits on previously held title rights set forth in the proposed N.J.A.C. 4A:8-2(f)1.

COMMENT: A union representative objected to the proposed deletion of N.J.A.C. 4A:8-2.2(g) and 2.3(e), arguing that when intermittent titles were created, employees in those titles were intended to have rights equivalent to those of other permanent employees.

COMMENT: Six persons objected to the restrictions of special reemployment rights set forth in N.J.A.C. 4A:8-2.3(e), arguing that individuals should not be removed from special reemployment lists if they declined a job in a particular location.

COMMENT: Sixteen persons supported the proposed change from title seniority to jurisdiction seniority, as set forth in N.J.A.C. 4A:8-2.4(a)1, stating that this was a more equitable way to measure seniority. Twenty-four persons opposed the change, arguing that it undermined merit principles and adversely impacted employees who had planned career moves based on a title seniority system.

COMMENT: Two persons questioned the legality of N.J.A.C. 4A:8-2.4(a)1, which provides that a resignation/new appointment pursuant to N.J.A.C. 4A:4-7.9 shall not be considered a break in continuous service.

COMMENT: Four persons supported the amendment set forth at N.J.A.C. 4A:8-2.4(b), providing that seniority credit be granted based on PAR ratings. Two other persons supported the concept, but one urged that PAR ratings be done by the reviewer instead of the immediate supervisor, and the other person suggested that PAR ratings be used only if such ratings were on file for two previous years and the rating was supported by documentation. One hundred sixty-eight persons opposed the amendment. The major reasons for objecting were as follows: the current PAR system is subjective and prone to abuse; the current system has an adverse impact on minorities; there is a lack of compliance with the current PAR system, so that thousands of State employees do not have a current PAR; the purpose of a performance evaluation system is to provide feedback and improve performance, not penalize workers; and imposition of the new system will destroy cooperation among State workers and will foster destructive competition.

COMMENT: Eleven employees opposed the system for preferred seniority, as set forth in N.J.A.C. 4A:8-2.4(c), on grounds similar to those offered in opposition to the proposal to grant seniority credit based on PAR ratings.

COMMENT: Two persons commented that the list of leaves in N.J.A.C. 4A:8-2.4(d)3, for which seniority is not deducted, should also include union leave.

COMMENT: One person supported the amendment to N.J.A.C. 4A:8-2.5 concerning limits on reassignments. Three persons opposed the changes, arguing that such reassignments would be based on favoritism and would have the effect of undoing the layoff process.

RESPONSE: The comments presented at the public hearings and in writing reveal considerable controversy regarding many of the proposed amendments to N.J.A.C. 4A:8. As noted above, the largest number of comments were directed at the proposal to grant credit for PAR ratings in determining seniority. Additional time is needed to review these concerns with interested parties and to formulate revised amendments to the layoff rules. In the meantime, however, it is necessary that a regulatory framework for layoffs continue in effect past January 16, 1995, the current expiration date of N.J.A.C. 4A:8. Therefore, the Board has decided to readopt N.J.A.C. 4A:8 without change, but this readopted chapter will expire on May 20, 1995. During the interim, revised amendments are being proposed. The Summary will address the major issues raised by these comments when the revised amendments are published in the February 21, 1995 issue of the New Jersey Register.

Full text of the readoption can be found in New Jersey Administrative Code at N.J.A.C. 4A:8.

COMMUNITY AFFAIRS

(a)

DIVISION OF HOUSING AND COMMUNITY RESOURCES

Homelessness Prevention Program

Adopted New Rules: N.J.A.C. 5:12

Proposed: November 7, 1994 at 26 N.J.R. 4248(a).

Adopted: December 29, 1994 by Harriet Derman, Commissioner, Department of Community Affairs.

Filed: January 3, 1995 as R.1995 d.56, **without change**.

Authority: N.J.S.A. 52:27C-24, 52:27D-280.

Effective Date: February 6, 1995.

Expiration Date: February 6, 2000.

Summary of Public Comment and Agency Response:

N.J.A.C. 5:12 expired December 27, 1994. Pursuant to N.J.A.C. 1:30-4.4(f), the rules proposed for readoption with amendments are adopted herein as new rules.

A comment was received from David G. Sciarra, Esq., Senior Attorney, Legal Services of New Jersey.

COMMENT: The proposed amendments establishing automatic exclusions from eligibility for tenants who have occupied a unit for less than three months and for homeowners with more than one mortgage should not be adopted. Existing criteria are sufficient to allow the Homelessness Prevention Program (HPP) to target its limited resources effectively. The proposed exclusions may result in homelessness for otherwise deserving applicants.

RESPONSE: As the commenter acknowledges, HPP is a program with limited resources. It is not an entitlement program. The rules already provide that assistance is to be limited to the minimum amount needed to obtain habitable lodging or to avoid imminent eviction or foreclosure and that assistance is only to be provided when the HPP determines that the applicant is likely to be able to pay shelter costs once the period of assistance has ended. The proposed exclusions are consistent with these objectives.

The experience of the HPP has been that tenants who are unable to pay rent after less than three months in a house or apartment are overwhelmingly likely to be people with a history of unstable tenancy whose problems in retaining housing are chronic and repetitive in nature and who are not likely to be able to retain their housing once program assistance ends. HPP experience also shows that homeowners with more than one mortgage are likely to continue on a downward spiral towards foreclosure once program assistance ends and that the amount of assistance that they require is likely to exceed the amount needed to avoid foreclosure on one mortgage. It is important to the program that loans made to homeowners be paid back, since only then can it be available for assistance to others, and the HPP must therefore allocate the money it has available for loans to those who are most likely to pay back, which experience shows to be those with not more than one mortgage.

Executive Order No. 27 Statement

No Executive Order No. 27(1994) analysis is required because these rules are not being adopted, readopted or amended under the authority of, or in order to implement, comply with, or participate in, any program established under Federal law or under a State statute that incorporates or refers to Federal law, standards or requirements.

You're viewing an archived copy from the New Jersey State Library.

Full text of the rules proposed readoption adopted herein as new rules can be found in the New Jersey Administrative Code at N.J.A.C. 5:12.

Full text of the adopted amendments follows:

5:12-2.1 Eligibility

(a)-(d) (No change.)

(e) No person or household found in any administrative or legal proceeding, in which notice and an opportunity to be heard have been given, to have committed fraud or abuse in another governmental assistance program, including, without limitation, other programs providing rental subsidies, or to have made a false or misleading statement or a material omission in any submission to the Program, shall be eligible for assistance.

(f) (No change.)

(g) No person or household determined by the Program to be unlikely to pay shelter costs after the period of assistance has ended shall be eligible for assistance.

1. Program staff will work with each applicant in the preparation of a budget that will be of use in determining the applicant's ability to carry shelter costs.

2. No person or household shall be eligible for assistance with back rent unless they have resided in the housing unit for at least three months prior to falling into arrears.

(h) (No change.)

(i) Assistance to any person or household facing foreclosure as a result of mortgage or property tax arrearages shall be in the form of a loan which shall be secured by a recorded mortgage.

1. No person or household shall be eligible for a mortgage loan unless the home is an owner-occupied single family dwelling (which may be an attached or detached house or a condominium unit) that shall have been owned and occupied by the applicant for at least one year prior to falling into arrears on the mortgage loan or property taxes.

2. No person or household shall be eligible for a mortgage loan in the event of initiated or ongoing bankruptcy proceedings or in the event that the property is encumbered by more than one mortgage.

3. The total amount of any mortgage loan shall not exceed an amount equal to 600 percent (six times 100 percent) of the monthly "Fair Market Rental" as defined for the Section 8 Existing Program for the region in which the property is located, as determined in accordance with guidelines published annually by the United States Department of Housing and Urban Development.

ENVIRONMENTAL PROTECTION

(a)

WATER MONITORING MANAGEMENT
BUREAU OF MARINE WATER CLASSIFICATION AND ANALYSIS

Shellfish Growing Water Classifications

Adopted Amendments: N.J.A.C. 7:12-1.1, 1.2, 2.1, 3.2, 4.1, 4.2 and 9.1

Proposed: November 21, 1994 at 26 N.J.R. 4475(b).

Adopted: January 12, 1995 by Robert C. Shinn, Jr., Commissioner, Department of Environmental Protection.

Filed: January 13, 1994 as R.1995 d.81, **with substantive and technical changes** not requiring additional public notice and comment (see N.J.A.C. 1:30-4.3).

Authority: N.J.S.A. 13:1D-9 and 58:24-1 et seq.

DEP Docket Number: 46-94-10/490.

Effective Date: February 6, 1995.

Expiration Date: Novmeber 24, 1997.

Summary of Public Comments and Agency Responses:

No comments received.

Summary of Agency-Initiated Changes:

At N.J.A.C. 7:12-1.1, the Department updated the Nautical Charts used to designate the growing water classifications. As a result some of the Channel Marker numbers have been redesignated. Any classification lines so affected have been revised to reflect the new number designation.

Executive Order No. 27 Statement

These rules are developed under public health control procedures of the National Shellfish Sanitation Program. The NSSP is a tripartite cooperative program consisting of the States, shellfish industry and the Federal Food and Drug Administration. This cooperative program is managed through the Interstate Shellfish Sanitation Conference which developed the sanitary control procedures defined in Parts I and II of the Manual of Operations. Each state has the responsibility to adopt laws and regulations consistent with the guidelines of the NSSP. The Food and Drug Administration is responsible for reviewing the state shellfish control program to insure that it is consistent with all state shellfish control programs. This rule adoption contains no standards or requirements that exceed the standards or requirements imposed by Federal law.

Full text of the adoption follows (additions to proposal indicated in boldface with asterisks ***thus***; deletions from proposal indicated in brackets with asterisks *[thus]*):

7:12-1.1 General Provisions

(a)-(h) (No change.)

(i) Charts designating growing water classifications as hereinafter referenced are available from the Bureau of Marine Water Classification and Analysis Offices, Marine Police Stations and Shellfisheries Field Offices at Bivalve and Nacote Creek. However, all persons are cautioned that emergency closures may be necessary and may not be charted. These Shellfish Growing Water Classification Charts are developed from Nautical Charts Number 12327 New York Harbor, *[84th Edition, December 7, 1991]* ***86th Edition, May 1, 1993***; Number 12324 Intracoastal Waterway, Sandy Hook to Little Egg Harbor, *[26th Edition, May 15, 1992]* ***27th Edition, June 11, 1994***; Number 12316 Intracoastal Waterway, Little Egg Harbor to Cape May, *[24th Edition, January 1991]* ***26th Edition, June 18, 1994***; and Number 12304 Delaware Bay, *[33rd Edition, August 10, 1991]* ***35th Edition, January 1, 1994***. The Department of Environmental Protection *[and Energy]* hereby condemns all shellfish growing waters as described in this chapter and other places from which shellfish are or may be taken as listed in N.J.A.C. 7:12-9 at all times of the year except when otherwise noted in N.J.A.C. 7:12-4 and 5.

(j) (No change.)

7:12-1.2 Definitions

The following words and terms, when used in this chapter, shall have the following meanings unless the context clearly indicates otherwise.

. . .

"Department" means the New Jersey Department of Environmental Protection.

. . .

"Division" means the Division of Science and Research in the Department of Environmental Protection.

7:12-2.1 Shellfish growing water classification—Prohibited

(a) The following shellfish growing waters are classified Prohibited:

1.-8. (No change.)

9. Atlantic City area (Note: Portions are also designated as Special Restricted and Seasonal. See N.J.A.C. 7:12-3 and 4):

i.-ii. (No change.)

iii. All of Beach Thorofare from a line across Beach Thorofare bearing approximately 225 degrees T from the eastern side of the mouth of Penrose Canal at its junction with Beach Thorofare to a line from the northernmost tip of runway number 22 (North-South runway) at Bader Field in Atlantic City and bearing approximately 033 degrees T across Beach Thorofare; and

iv. (No change.)

10.-17. (No change.)

You're viewing an archived copy from the New Jersey State Library.

18. Delaware Bay area (Note: Portions are also designated as Special Restricted and Seasonal. See N.J.A.C. 7:12-3 and 4):

i. All that portion of Delaware Bay contained within a line beginning at the Cape May ***Point*** Lighthouse (Fl 15*[sec]***(s)*** 165ft 24M) and bearing approximately 336 degrees T to Red Number 8 *[(R "8" Fl 4sec Bell)]* ***(Fl R 2.5s Bell)*** then bearing approximately 054 degrees T to the standpipe at North Cape May and terminating;

ii.-vii. (No change.)

viii. All of Cohansey River and tributaries upstream of a line from *[QK Fl]* ***QG*** 24ft 5M "1" and bearing approximately 097 degrees T across the mouth, to a Department maintained marker and terminating.

19. (No change.)

20. Atlantic Ocean:

i.-viii. (No change.)

ix. All of the ocean waters inshore of a line beginning at the base of the groin located on the beach near the intersection of Ocean Avenue and 2nd Avenue, City of North Wildwood, and continuing along that groin in a northeasterly direction to its outermost tip, then bearing approximately 147 degrees T towards a point with coordinates of latitutde 38 degrees *[0.0]* ***59*** minutes N., longitude 74 degrees 46.2 minutes W. (generally marked as a buoy charted as RW "H"MO (A) whistle) for approximately 0.5 nautical miles until it intersects a line bearing 044 degrees T from the light at the end of the eastern jetty of Cape May Inlet charted as Fl 4s 30ft 7M and passing tangent to the southeasternmost point of land of the City of North Wildwood. This point of intersecting lines has coordinates of latitude 38 degrees 59.9 minutes N., longitude 74 degrees 47.0 minutes West. The line then continues from the point of intersection bearing approximately 224 degrees T (reciprocal 44 degrees T) along that line towards the above noted light at the end of the eastern jetty of Cape May Inlet for approximately 2.8 nautical miles until it intersects a line bearing approximately 130 degrees T from the standpipe located on the corner of Park Boulevard and Myrtle Road, Borough of Wildwood Crest, with coordinates of latitude 38 degrees 58.4 minutes N., longitude 74 degrees 50.4 minutes W. This point of intersecting lines is approximately 0.4 nautical miles from the shoreline and has coordinates of latitude 38 degrees 57.9 minutes N., longitude 74 degrees 49.6 minutes W. Then proceeding in a southeasterly direction along that line to a point approximately 1.5 nautical miles from the shoreline with coordinates of latitutde 38 degrees 57.2 minutes N., longitude 74 degrees 48.5 minutes W., then proceeding parallel to the shoreline in a southwesterly direction 2.5 nautical miles offshore for approximately 2.4 nautical miles to a point with coordinates of latitutde 38 degrees 55.4 minutes N., longitude 74 degrees 50.5 minutes W., then bearing approximately 310 degrees T (reciprocal 130 degrees T) for approximately 1.2 nautical miles to the light noted above at the end of the eastern jetty of Cape May Inlet then along that jetty to the shore and terminating;

x.-xii. (No change.)

7:12-3.2 Shellfish growing waters that are classified as Special Restricted

(a) The following shellfish growing waters are classified as Special Restricted:

1.-22. (No change.)

23. Atlantic City-Absecon area (Note: A portion is also designated as Seasonal. See N.J.A.C. 7:12-4):

i. All of Absecon Inlet and Absecon Channel contained within a line from the base of the Vincent Haneman Bridge (Rte. 87) (at Harrah's Casino) and continuing along that shoreline crossing the mouth of Clam Creek and continuing to the seaward end of the jetty on the western shore, at the mouth of Absecon Inlet, then channel ward to a line from RN"*[4]***2***" (FlR2.5s) and bearing approximately 328 degrees T to the midspan of the Vincent Haneman Bridge (Rte. 87), then running northwest along that line to the Rte. 87 bridge, then westward along the bridge to the point of origin at the base of the bridge.

ii.-vii. (No change.)

24. Pleasantville-Northfield-Linwood-Margate-Ventnor-Longport area (Note: A portion is also designated as Seasonal. See N.J.A.C. 7:12-4):

i.-ii. (No change.)

iii. All of Great Thorofare and all of Beach Thorofare from a line from the northernmost tip of runway number 22 (North-South runway) at Bader Field in Atlantic City and bearing approximately 033 degrees T across Beach Thorofare to a line from the tip of the stone jetty at the end of Atlantic Avenue (Longport) and bearing approximately 336 degrees T across Beach Thorofare to the center of the Longport Blvd.-Route 152 bridge, that crosses an unnamed creek on the unnamed island immediately north and west of the city of Longport;

iv.-vi. (No change.)

25. Ocean City-Somers Point area (Note: a portion is also designed as Seasonal. See: N.J.A.C. 7:12-4):

i.-ii. (No change.)

iii. All of Beach Thorofare, Peck Bay and adjacent thorofares contained within a line beginning at the western end of West 16th Street, Ocean City and bearing approximately 342 degrees T to Flashing red light *[2 (Fl Q R "2")]* ***263 (Fl Q R "263")****, then along the south side of the unnamed island (on which Flashing red light *[2 (Fl Q R "2"]* ***263 Fl QR "268"**** is located) to its westernmost point, then across the small thorofare to the nearest point of land on Shooting Island and following the southeastern shoreline of Shooting Island, then in a northerly direction to a Department maintained marker, then bearing approximately 240 degrees T across the thorofare to the northernmost point of land on the unnamed island (located southwest of Shooting Island), then along the shoreline in a westerly direction to another Department maintained marker, then bearing approximately 203 degrees T through Flashing green light 275 (Fl G "275") to a Department maintained marker on the Ocean City shoreline, then along the Ocean City shoreline in a northeasterly direction to its point of origin at West 16th Street and terminating;

26.-29. (No change.)

30. The Wildwoods area:

i.-ii. (No change.)

iii. All of Jarvis Sound south and west of a line connecting two *[unnamed tributaries (and passing through buoy 45)]* ***Department maintained markers on the northern side of the mouth of Shell Thorofare and Meadow Creek**** at the northern end of Jarvis Sound then along the shoreline in a westerly direction to the junction with Reubens Thorofare and Upper Thorofare, then across Upper Thorofare bearing approximately 311 degrees T then along the southern shoreline of Jarvis Sound across the mouth of Middle Thorofare and Lower Thorofare, then along the shoreline in a northerly direction acorss the mouth of Shell Thorofare and terminating at the point of origin.

31-32. (No change.)

33. Delaware River area:

i. All of the New Jersey portion of the Delaware River and its tributaries thereof and the New Jersey section of Delaware Bay and its tributaries between the two lines described herein:

(1) A straight line beginning at the tower just northwest of the mouth of Mad Horse Creek bearing approximately 173 degrees T to a tower on Bombay Hook Point, Delaware, this line intersects the New Jersey-Delaware boundary line at Latitude 39 degrees 21 minutes 16 seconds N., Longitude 75 degrees 26 minutes 44 seconds W.; and

(2) (No change.)

(3) All of Stow Creek and Mad Horse Creek.

7:12-4.1 Seasonally Approved growing waters (Approved November 1 through April 30 yearly, Special Restricted May 1 through October 31, yearly)

(a) The following shellfish growing waters designated on the charts referred to in N.J.A.C. 7:12-1.1 shall be Special Restricted for the harvest of shellfish from May 1 through October 31 yearly and Approved for the harvest of shellfish from November 1 through April 30 yearly:

You're viewing an archived copy from the New Jersey State Library.

1. (No change.)

2. Barnegat Bay to Little Egg Harbor Bay-Long Beach Island area:

i. Northern Long Beach Island: Seasonal-Special Restricted May 1 through October 31 yearly, Approved November 1 through April 30 yearly:

(1) All that portion of Barnegat Bay and Manahawkin Bay lying east of a line beginning on the northern point of land forming in the mouth of the most northerly lagoon located between Butler and Meadow Streets in High Bar Harbor (Long Beach Township) and bearing approximately 270 degrees T to the northeast point of the northernmost of the two islands just offshore, (Edwin B. Forsythe National Wildlife Refuge-Barnegat Division) then along the west shore of that island to its southeast point, then bearing approximately 131 degrees T across the unnamed gut or thorofare to the northeast point of the southernmost island, then along the east shore of that island to its easternmost point, then bearing approximately 144 degrees T to the most easterly point on Vol Sedge, then along the southeastern shore of that island to its southernmost point, and then bearing approximately 170 degrees T to the easternmost extent of the southern island of Vol Sedge, then bearing approximately 213 degrees T to the westernmost tip of Loveladies Harbor (marsh), then bearing approximately 190 degrees T to the westernmost point of land at the end of Bay View Road which forms the (southern bank) entrance to the Loveladies Harbor lagoon complex, then proceeding to where a line bearing approximately 177 degrees T to the standpipe in Harvey Cedars intersects the shoreline just west of Bay Terrace (Harvey Cedars), and then following the bulkhead or shoreline in a southerly direction, until reaching the southwesternmost point of land, located at the westernmost extent of Maiden Lane (Harvey Cedars), and then bearing approximately 220 degrees T to a point of land just north of the northernmost extent of Kent Place (Harvey Cedars), and then following the western shoreline or bulkhead in a southerly direction across the mouths of the two lagoons. (The northernmost lagoon located between Buckingham Avenue and Lange Avenue in Long Beach Township shall remain Prohibited, and the southernmost lagoon, which is located immediately south of Lange Avenue shall also remain Prohibited) to the bulkhead of land on the southern bank forming the entrance to the second of these lagoons, then bearing approximately 205 degrees T to the northermost corner of the largest of the unnamed islands (just northeast of Fl *[8 ft. "85"]* ***G "55"*** off the mouth of Harvey Cove (Harvey Cove itself shall remain Special Restricted, See: N.J.A.C. 7:12-3.2(a)) then along that island's northern shoreline to its easternmost point then bearing approximately 115 degrees T to the westernmost point of land just west of the westernmost extent of West Salem Avenue in Harvey Cedars, then bearing approximately 219 degrees T to the westernmost point of land (marsh) located west of the westernmost extent of James Street in Long Beach Township, then bearing approximately 196 degrees T to the westernmost point of land located on the properties labeled as block 104, lot 10 and block 202, lot 10 (located just southwest of the westernmost extent of a private road known as Little Bridge Road) in Long Beach Township, then bearing approximately 209 degrees T to the end of the pier at the end of Bay Shore Street in Long Beach Township, then bearing approximately 247 degrees T to Flashing Green light "1" (Fl G "1"), then bearing approximately 224 degrees T to Flashing Red Light "2" (Fl R "2"), then bearing approximately 211 degrees T to a Department maintained marker on Cedar Bonnet Island, then following the east shore of that island to where the eastern shoreline of Cedar Bonnet Island intersects with Route 72 (Manahawkin Causeway) and then following the southern edge of that highway in an easterly direction to its terminus where Route 72 intersects with Long Beach Island (in Ship Bottom).

ii. (No change.)

3.-6. (No change.)

7. Ocean City-Somers Point Area-Great Egg Harbor Bay: Seasonal-Special Restricted May 1 through October 31, yearly, Approved November 1 through April 30 yearly;

i.-ii. (No change.)

iii. All the waters of Peck Bay contained within a line from the base of the 34th Street Bridge (Ocean City) and continuing along the Ocean City shoreline in a northeasterly direction to a Department maintained marker, then bearing approximately 295 degrees T to another Department maintained marker on the mainland, then along the shoreline in a southerly direction to the base of the 34th Street Bridge and across the bridge to the point of origin and terminating.

iv.-v. (No change.)

8.-10. (No change.)

11. Delaware Bay area:

i.-vi. (No change.)

vii. Fortescue Beach: Special Restricted May 1 through October 31 yearly, Approved November 1 through April 30 yearly:

(1) All waters northeast of a line from the southernmost tip of Beadons Point bearing approximately 154 degrees T to the westernmost tip of a point of land just south of Raybins Beach and just north of Fishing Creek (Cumberland County).

viii. (No change in text.)

7:12-4.2 Seasonally Approved growing waters (Approved January 1 through April 30 yearly, Special Restricted May 1 through December 31, yearly)

(a) The following shellfish growing waters designated on the charts referred to in N.J.A.C. 7:12-1.1 shall be Special Restricted for the harvest of shellfish from May 1 through December 31 yearly and Approved for the harvest of shellfish from January 1 through April 30 yearly:

1.-7. (No change.)

8. Great Egg Harbor River and Middle River: Seasonal-Special Restricted May 1 through December 31 yearly, Approved January 1 through April 30 yearly:

i. All that portion of Great Egg Harbor River and Middle River contained within a line beginning at Fl R "4" and bearing approximately 215 degrees T to the western shoreline in a northwesterly direction to Middle River, then along the entire shoreline of Middle River and including its tributaries, then along the shore of Great Egg Harbor River to a Department maintained marker, then bearing approximately 028 degrees T to Fl R "8", then along the northern and/or eastern shore of Great Egg Harbor River in a downstream direction to the point of origin at Fl R "4".

7:12-9.1 General Provisions; all programs

(a)-(b) (No change.)

(c) Each application shall be accompanied by a fee in the amount of $25.00 (check or money order made payable to Treasurer, State of New Jersey). Forms may be obtained from the New Jersey Department of Environmental Protection, Bureau of Marine Water Classification and Analysis, Stoney Hill Road, P.O. Box 405, Leeds Point, New Jersey 08220, and New Jersey Marine Police stations located throughout the State. Duplicate permits may be issued upon written request to the Bureau of Marine Water Classification and Analysis at the aforementioned address if accompanied by a $10.00 check or money order payable to the Treasurer, State of New Jersey.

(d)-(m) (No change.)

You're viewing an archived copy from the New Jersey State Library.

(a)

DIVISION OF FISH, GAME AND WILDLIFE

Marine Fisheries

Weakfish, Bluefish, Winter Flounder, Lobster, Atlantic Sturgeon

Adopted Amendments: N.J.A.C. 7:25-18.1, 18.4, 18.5, 18.14 and 18.15

Adopted Repeal and New Rule: N.J.A.C. 7:25-18.12

Adopted New Rule: N.J.A.C. 7:25-18.13

Proposed: November 7, 1994 at 26 N.J.R. 4277(b).

Adopted: January 12, 1995 by Robert C. Shinn, Jr., Commissioner, Department of Environmental Protection.

Filed: January 13, 1995 as R.1995 d.82, **with substantive and technical changes** not requiring additional public notice and comment (see N.J.A.C. 1:30-4.3).

Authority: N.J.S.A. 23:2B-6.

DEP Docket Number: 45-94-10/480.

Effective Date: February 6, 1995.

Expiration Date: February 15, 1996.

Summary of Public Comments and Agency Responses:

The New Jersey Department of Environmental Protection (Department) is adopting amendments to N.J.A.C. 7:25-18.1, 18.4, 18.5, 18.14 and 18.15, and is repealing N.J.A.C. 7:25-18.12 and adopting new rules for N.J.A.C. 7:25-18.12 and 18.13. These new rules and amendments were proposed on November 7, 1994 at 26 N.J.R. 4277(b). Public hearings were held on November 28, 1994 at the Ocean County Administration Building in Toms River, New Jersey and on November 29, 1994 at the Rutgers Cooperative Extension of Cape May County in Cape May Court House, New Jersey. The comment period closed on December 7, 1994. Oral comments were presented by 14 individuals at the public hearings. A total of 26 individuals provided written comments, including nine individuals that also provided oral comments at a public hearing. The commenters were commercial fishermen, recreational fishermen and interested citizens.

The following is a list of the persons, with their affiliations, if any, who made timely written or oral comments on the proposal.

Individual—Organization

1. Brick Wenzel, Point Pleasant Co-operative
2. Ronald L. Reisner, Belford Seafood Co-operative and Seafarers International Union/Seafarers Commercial Fishermen's Association
3. Joe Rizzo, New Jersey Shellfisheries Association
4. Tom Fote, New Jersey Commissioner, Atlantic States Marine Fisheries Commission
5. Jim Lovgren, Point Pleasant Co-operative
6. Shaun Gehan, Seafarers International Union/Seafarers Commercial Fishermen's Association
7. Joseph Branin, Belford Seafood Cooperative
8. William Gallagher, Belford Seafood Cooperative
9. Charles Kelly, Belford Seafood Cooperative
10. Robert Munson
11. Les Lupton, Fortesque Captains Association
12. Alex Ogden, Delaware Bay Waterman's Association
13. Bob James, New Jersey Weakfish Citizen Advisor to Atlantic States Marine Fisheries Commission
14. Jim Harris
15. Milton W. Jewell
16. Jack Fullmer, New Jersey Council of Diving Clubs
17. George E. Steller, Teri Jean II Charters, Inc.
18. Carman Conti
19. Stephen Novakowski
20. Charles Law
21. Allan Bodgan
22. Jeff Miliukas
23. Denis Lovgren, Harold Ford, John Cole, James Lovgren, Fisherman's Dock Cooperative, Inc.
24. Norman DuPont
25. Denis Lovgren
26. G. Elliot Giles

The following is a summary of the comments timely submitted on the proposal and the Department's responses. The number(s) in parenthesis after each comment identifies the commenter(s) listed above.

General

1. COMMENT: All the proposed changes do not meet the Atlantic States Marine Fisheries Commission's (ASMFC) standards and procedures for the interstate fisheries management program. Thus, they can be held up and New Jersey should be excused for non-compliance. (1)

RESPONSE: The Department disagrees with the comment. The various fishery management plans (FMP) were developed and approved by the ASMFC in conformance with the standards and procedures in place at the time of the plans' respective adoptions. More recently, on December 8, 1994, the Secretary of the U.S. Department of Commerce concurred in the ASMFC's determination that New Jersey is out of compliance with the weakfish, Atlantic sturgeon and bluefish management plans because of the delay in implementing the regulations. The ASMFC recommended that a moratorium be imposed in New Jersey for these fisheries. The Secretary of Commerce concurred with the ASMFC and imposed a moratorium, to start on April 15, 1995. The regulations adopted herein are designed to meet the requirements of the ASMFC management plans and bring New Jersey into compliance with each of the plans. The Department anticipates that the moratorium will be lifted when these adopted rules become effective.

2. COMMENT: The commenter does not necessarily agree with all the aspects of the proposal required under the existing plans but the regulations should be adopted because of the potential of a moratorium. (4)

RESPONSE: The Department agrees with the comment since adoption of these amendments and new rules will meet the requirements of the ASMFC and bring New Jersey into compliance with the FMPs for weakfish, Atlantic sturgeon and bluefish. On December 8, 1994 the U.S. Department of Commerce declared New Jersey out of compliance with the ASMFC FMPs for weakfish, bluefish and Atlantic sturgeon and established a moratorium on New Jersey's fishery for these species effective April 15, 1995. Therefore, the Department must adopt these rules to comply with the FMPs and to avoid the pending moratorium.

N.J.A.C. 7:25-18.1

3. COMMENT: Fish stocks should be protected by a minimum size limit to allow the fish to spawn at least once. (1)

RESPONSE: Maintaining a spawning stock size large enough to assure adequate juvenile production is very important. This can be accomplished through size limits large enough to allow spawning one or more times, or by seasonal closures that reduce fishing related mortality across all age groups and increase the survival of spawning age adults, or by a combination of the two strategies.

The ASMFC weakfish plan these rules implement uses both strategies. A seasonal closure is adopted to sustain the fishery and to reduce fishery mortality for all age groups. In addition, because of the continued decline in the size of landed weakfish within the stock, a size limit is adopted that allows most weakfish to reach spawning size before they can be landed.

The commercial bluefish quota is adopted to respond to the ASMFC requirement which prohibits the commercial harvest of bluefish to exceed 20 percent of the total coastal bluefish harvest. Since the stock appears to consist of a range of sizes and year classes, the reduction in mortality should be spread across all age groups, thereby allowing survival of sufficient numbers of fish of spawning age as well as other age fish. Accordingly, with the commercial quota and recreational possession limits, a minimum size limit is unnecessary at this time.

The amendment to N.J.A.C. 7:25-18.14 also provides for added protection of juvenile winter flounder. Previously, the Department adopted a 10 inch minimum size limit for winter flounder to allow for adequate spawning (see 23 N.J.R. 2011(a)). This adoption provides further protection of undersized flounder by increasing certain size limits and establishing a minimum otter trawl mesh size to allow escape by undersized flounder, thereby reducing mortality from discarded fish.

To protect Atlantic sturgeon from further stock depletion, the ASMFC FMP recommended imposing (1) a minimum size limit of 84 inches, (2) a moratorium on all harvest, or (3) the adoption of alternative measures that are conservationally equivalent. Option 3 allows states to adopt size limits less than the recommended 84 inches, if the state successfully demonstrates to the ASMFC that a reduced quota at a lower size limit

You're viewing an archived copy from the New Jersey State Library.

is conservationally equivalent to an 84 inch minimum size limit. The Department has maintained the existing minimum size limit of 60 inches, and as per the ASMFC requirements, reduced the annual sturgeon quota to 15,475 pounds.

4. COMMENT: The same minimum size limit on a fish stock should be established for all user groups for enforcement purposes. (1)

RESPONSE: The same minimum size limit for all user groups would be easier for fishermen to understand and would ease the enforcement burden. However, to do so with weakfish would adversely affect certain elements of the commercial fishery, specifically the otter trawl fishery, more so than other fishermen and would not uniformly apply the responsibility of conservation with the other fisheries. A uniform minimum size limit for all user groups would also limit the number of management options. For recreational fishery, for instance, several options would yield the same conservation benefit: a four fish possession limit at 12 inches, a six fish possession limit at 13 inches, or a 14 fish possession limit at 14 inches. The Department prefers to offer each user group a series of conservationally equivalent options during development of the rules.

Different winter flounder size limits are also used for different user groups. During the rule development process, user groups were provided with multiple management options that included seasons and size limits. Representatives of the recreational fishery preferred a smaller size limit and a shorter season, while the commercial otter trawl fishery preferred a larger size limit and a longer season. The Department has adopted different size limits to reflect the needs of the fishermen participating in different winter flounder fisheries, without jeopardizing the conservation benefits to the resource.

5. COMMENT: The commenter wholeheartedly agreed with the proposal on size and possession limits for saltwater fish. There have been far too many undersized winter flounder taken in the past. (15)

RESPONSE: The Department appreciates the commenter's support. Previously, the Department adopted a 10 inch minimum size limit for winter flounder to eliminate the taking of very small winter flounder. This adoption further protects small fish by increasing certain winter flounder size limits and requiring a minimum otter trawl mesh size to allow the escape of undersized fish.

6. COMMENT: The Commissioner should not be able to modify regulations by notice. (2, 5, 23)

RESPONSE: The Department appreciates the commenter's concerns but believes that, owing to the long timeframe required to adopt a regulatory amendment, it is essential to authorize the Commissioner to modify management measures by notice in order to avoid imposition of a Federal moratorium on the various fisheries. Under the rule, this authority is limited to the modification of the following management measures: size limits, possession limits, seasons, quotas and mesh sizes. Any such modification must also be approved by the Marine Fisheries Council, which will involve the Council's species committees that include citizen advisors from the respective fisheries. This procedure assures the opportunity for public comment and input.

7. COMMENT: In order for recreational fishermen to achieve compliance with the ASMFC weakfish requirements, weakfish fishermen must absorb another 40 percent cut when North Carolina has a 10 inch minimum size limit. (13)

RESPONSE: The Department does not know how the commenter has determined that the recreational fishery is taking "another 40 percent cut." The recreational possession limits under the ASMFC FMP are designed to allow states several options to achieve the required reduction in harvest. Amendment 2 to the Weakfish Plan, adopted by ASMFC on October 18, 1994, requires a 25 percent reduction in "exploitation" (as defined by the ASMFC) for the 1995-1996 fishing year. A possession limit of six fish at a minimum size of 13 inches achieves that reduction. However, the Department has modified the recreational weakfish provisions as explained in response to Comment 9.

8. COMMENT: The bluefish snapper fishery should be eliminated. (1)

RESPONSE: The ASMFC bluefish plan is currently based only on the reduction of mortality. Although a size limit could be instituted to permit a larger possession limit, the New Jersey Marine Fisheries Council's Bluefish Committee did not advocate implementation of a minimum size limit at this time. The snapper fishery is an important fishery throughout inshore areas and is especially attractive to children. In addition, small bluefish (snappers) are also used as bait for other larger gamefish. Thus, the Department adopts a possession limit. If more restrictions on this fishery are required, size limits would be an option.

9. COMMENT: The 13 inch minimum size and 10 fish possession limit for recreational weakfish has worked well. Of the current options, the 14 inch, and 14 fish limit is preferred since any reduction in bag (possession) limit would hurt fishing. (10, 11, 12)

RESPONSE: The Department proposed a 13 inch minimum size limit, a 10 fish possession limit and a closed season of October 18 to 31 for the recreational weakfish fishery. After the proposal was scheduled for publication in the New Jersey Register, the ASMFC notified New Jersey that the use of seasonal closures, in the recreational fishery, is not an acceptable management alternative at this time. Consequently, the Department must adopt a minimum size and possession limit to comply with the ASMFC weakfish requirements. As part of the introduction at the public hearings on the proposal, the Department advised the public of the ASMFC determination and sought comment on the following ASMFC approved management options: (1) 12 inch minimum size with a four fish possession limit, (2) 13 inch minimum size with a six fish possession limit, or (3) 14 inch minimum size with a 14 fish possession limit. The failure to adopt one of these management options will result in the imposition of a moratorium on New Jersey's recreational and commercial weakfish fisheries.

Following the hearings, the New Jersey Marine Fisheries Council's Weakfish Committee, including the citizen advisors for the recreational fishery, met to evaluate the comments received and the various options. The Committee recommended ASMFC option (3): a 14 inch minimum size with a 14 fish possession limit. The Committee further recommended that, when the ASMFC offers seasonal closures as a recreational management option, the Department should consider modifying these measures and restore the 13 inch minimum size limit, 10 fish possession limit and a closed season, as was originally proposed. In response to the public comment, to the Weakfish Committee's recommendation and the imposition of a moratorium by the U.S. Department of Commerce, the Department has modified the rules on adoption to establish a 14 inch minimum size limit and a 14 fish possession limit for the recreational weakfish fishery.

10. COMMENT: The commenter expressed support for the daily possession limit for weakfish to prevent fishermen from undertaking several trips each day. (10)

RESPONSE: The Department agrees that the previous wording provided a loophole for anglers to make multiple trips in one day and to land their limit on each trip. The intent of the regulation has always been to limit the angler to a daily possession limit.

11. COMMENT: A split bag (possession limit) of both 13 and 14 inch fish should be considered for Delaware Bay weakfish. (12)

RESPONSE: The Department disagrees because the concept is confusing to anglers and difficult to enforce. In addition, the ASMFC Weakfish Plan does not permit such a provision and the adoption of a split bag (possession) limit would not enable the State to comply with ASMFC FMP.

12. COMMENT: The recreational harvest of winter flounder cannot be reduced 44 percent when the March to May period remains open for fishing. This is when the majority of winter flounder are harvested by recreational fishermen. Recreational statistics are inaccurate. (3, 23)

RESPONSE: The Department respectfully disagrees. The best available data regarding recreational harvest of winter flounder is from the National Marine Fisheries Service Marine Recreational Fishing Statistics Survey. Data from this survey for the base years of 1987 to 1991 show that 44 percent of the winter flounder recreational harvest occurs during the proposed closures of January 1 to February 29 and of June 1 through September 14. Therefore, the Department is adopting this provision as proposed.

13. COMMENT: Applying the no-fillet-at-sea rule to other species with a minimum possession size limit will hurt the business of those charter boats that are not licensed to carry 15 passengers or more and consequently do not qualify for a Special Fillet Permit. The Special Fillet Permit should be extended to all licensed party and charter boats with a permit revocation for any vessel that violates the conditions of the permit. (17)

RESPONSE: Prohibiting the at-sea filleting of species with a minimum possession size limit is designed to enhance enforceability. Without this provision, the minimum size limits may be easily circumvented. The Special Fillet Permit system which allows vessels licensed to carry 15 or more passengers was recommended by a special committee comprised of party and charter boat industry representatives and Marine Fisheries Council members. The Marine Fisheries Council has been approached at previous Council meetings regarding this issue and has requested

You're viewing an archived copy from the New Jersey State Library.

information from the respective groups. Once that information is received, the Council will evaluate whether or not there is justification to extend the Special Fillet Permit to other vessels. The Department is therefore not modifying this provision at this time.

14. COMMENT: The commenter hopes that the fillet prohibition did not include any species that have to be cleaned at sea such as skates and monkfish. (1)

RESPONSE: The rule prohibits the filleting at sea only of those fish for which a minimum possession size limit is established. The filleting-at-sea prohibition does not apply to those species that have a size limit for sale purposes only, including goosefish (monkfish) and Atlantic sturgeon. In fact, the rule specifically permits the cleaning of these two species at sea, by establishing a minimum dressed length. There is no minimum size limit on skates; therefore, the cleaning of skates at sea is not affected by this rule.

N.J.A.C. 7:25-18.4

15. COMMENT: The commenter supports the changes in the definition of spearfishing which adds the wording "or by hand" as an allowable method of capture to allow divers to take lobsters by hand. (16)

RESPONSE: The Department appreciates the commenter's support. The definition of spearfishing now specifically permits scuba divers to "take by hand" which continues a traditional practice.

N.J.A.C. 7:25-18.5

16. COMMENT: The proposed fyke net closure in December is bad, because this month is an important part of the season in Barnegat Bay. It is preferable to limit the number of fyke nets instead. (1, 3)

RESPONSE: Limiting the number of fyke nets would adversely affect other fisheries. Unless absolutely necessary for winter flounder management, the Department would not want to adopt measures for winter flounder that would infringe on other fisheries. In addition, limiting the number of fyke nets would require the establishment of a limited entry system whereby new fishermen may be excluded from participating in the fishery. At the present time, the Department does not believe that a limited entry system is necessary to comply with the requirements of the ASMFC management plan. However, because some commenters fyke net solely for winter flounder, and because December is an economically important harvest period, the Department is changing the rule on adoption to provide for a continuous winter flounder fyke net harvest period from November 1 to January 21 with a 10 inch minimum size limit. This season will allow for a continuous harvest period that includes December and at the same time meets the requirements of the ASMFC Winter Flounder Management Plan. Under the ASMFC requirements, an alternative was available that would allow for a longer season of November 1 to February 18 and a 12 inch minimum size limit, but no commenters requested a larger size limit in order to allow for a longer open season.

17. COMMENT: When fish are removed from a fyke net and returned to the water they can freeze and die at air temperatures below 30 degrees. (1)

RESPONSE: Department staff has considerable experience collecting winter flounder throughout the winter period using a variety of sampling gears. This experience includes collecting and tagging almost 15,000 winter flounder in estuaries that are regularly fyke netted. Freezing of winter flounder during extremely cold weather has rarely been encountered. Therefore, the Department believes that the freezing of properly handled fish contributes negligibly to winter flounder mortality.

18. COMMENT: The State has admitted that it has no longterm data of commercial landings. The winter flounder fyke net fishery cannot be cut 44 percent if there are no documented landings by fyke fishermen. (3)

RESPONSE: The Department disagrees with the commenter's statement. Longterm commercial landings data do exist for the New Jersey fyke net fishery from the National Marine Fisheries Service. These data were used to calculate seasonal closures to comply with the required 44 percent reduction in exploitation.

19. COMMENT: Any split season for fyke netting is impractical due to the difficulty in setting and resetting fyke nets. (21, 22, 24, 26)

RESPONSE: As explained in the response to Comment 16 above, the Department has reconsidered the effects of a split season for winter flounder fyke netting and has concluded that a continuous season will enable the fishery to operate in a more efficient manner. However, to comply with the ASMFC required 44 percent reduction in exploitation, the 10 inch minimum size limit from November 1 to January 21 is retained for winter flounder harvested in fyke nets. The overall fyke net season is not changed, but winter flounder harvested in fyke nets cannot be retained beyond January 21. Thus, the Department is adopting a continuous season for winter flounder taken by fyke nets of November 1 to January 21, inclusive.

20. COMMENT: Several commenters suggested various fyke net seasons for winter flounder, as follows: December 1 to March 15 (3), October 15 to March 20 (21), November 15 to March 15 (24), November 15 to March 1 (26).

RESPONSE: The Department has reconsidered the proposed split season for the harvest of winter flounder from fyke nets and, as explained in the previous response, is adopting a continuous season from November 1 to January 21 with a 10 inch minimum size limit. None of the seasons recommended by the commenters would enable the Department to comply with the requirements of the ASMFC Winter Flounder Management Plan. An alternative under the FMP would have been to allow for a longer season at a 12 inch minimum size limit, but no commenters requested an increase in size limit to allow for a larger season. The Department is, therefore, adopting a continuous season for winter flounder taken by fyke nets to run from November 1 through January 21.

N.J.A.C. 7:25-18.12

21. COMMENT: A commenter indicated that additional days have been added to the weakfish season with a January 1 open season date. (1)

RESPONSE: No days have been added to the gill net weakfish season. Gill net fishing seasons begin at various times in various locations of the State. It has been and will continue to be legal to land weakfish by gill net in January and February in those areas where the gill net season is open. However, historically no gill net caught weakfish have been landed in New Jersey during these months since the fish do not occur in the State's waters in great abundance at this time of the year. In some years, small amounts (less than 100 pounds) have been landed in March. The seasonal closure is designed to meet the requirements of the ASMFC weakfish plan. There is no reason for the season to be more restrictive, especially since no credit would be given for closing during the time period (January and February) when there are no weakfish landings by gill net.

22. COMMENT: Depending on weather, a spring closure of May 20 through September 3 in some years could eliminate the entire gill net fishery for weakfish in Delaware Bay. A fall closure would be acceptable, for example, September 3 to October 19. (12)

RESPONSE: The suggested fall closure of September 3 to October 9 falls far short of the ASMFC's required reduction. The gill net season was developed after several meetings of the Council's Weakfish Committee which included representatives from the Atlantic Ocean and Delaware Bay gill net fisheries. The season designed to achieve ASMFC's required reduction in fishing mortality, while maintaining equity between the Bay and the Ocean fisheries. The Department recognizes that bad weather could adversely affect either or both fisheries. However, regardless of the fishing season, weather will always be an unpredictable factor. The Department has used the average of past years' landings as a basis in developing the season and, therefore, has accounted for whatever varying weather conditions have occurred during the different years.

23. COMMENT: The otter trawl fishery (weakfish) suffered a 25 percent cut when ASMFC reductions were required based on the three year average (of 1989 to 1991). The fishery is now asked to take another 25 percent cut on the 1993/94 catch. Fishermen are not given any credit for previous reductions. (14)

RESPONSE: The weakfish fishery is not asked to take another 25 percent reduction. The ASMFC plan calls for a 25 percent reduction in exploitation based on average harvest over a three year period, not a 25 percent reduction from the 1993 harvest. Since, as noted, New Jersey took action to reduce the overall New Jersey harvest in 1992, the ASMFC has allowed New Jersey to use the period of 1989 to 1991, when fish were more abundant, to determine the average harvest on which to base the 25 percent reduction.

Exploitation refers to the proportion of an existing stock harvested in a given time period. As a stock declines in abundance, maintaining the same level of landings results in an increase in exploitation. In order to maintain or lower the exploitation of a declining stock, landings must be reduced.

24. COMMENT: Open seasons (otter trawl) for weakfish and bluefish should be identical. (14)

You're viewing an archived copy from the New Jersey State Library.

RESPONSE: The otter trawl seasons for weakfish and bluefish are designed to meet the ASMFC requirements of the respective fishery plans. The seasons were determined based on several meetings of the Council's Weakfish and Bluefish Committees and the various user groups. The fishery seasons cannot be identical, since the fisheries' historical landings were not identical. The rule allows otter trawling for bluefish in early October, while the weakfish season is still closed, and permits fishing for weakfish in December, after the bluefish season closes. To the extent possible, the seasons overlap.

25. COMMENT: The summary does not identify a specific level of reduction for weakfish required by the plan. (10)

RESPONSE: Amendment 2 of the ASMFC Fishery Management Plan for Weakfish requires a 25 percent reduction in exploitation for the fishing year April 1, 1995 through March 31, 1996. At a 13 inch minimum length, a 32 percent reduction in fishing mortality is needed to achieve the ASMFC's required 25 percent reduction in exploitation. The adopted gill net seasonal closures achieve that reduction.

26. COMMENT: The recreational bluefish harvest is not documented properly. (1)

RESPONSE: The Marine Recreational Fishery Statistics Survey conducted by the National Marine Fisheries Service (NMFS) was the source for the recreational data used in the bluefish management plan. More than 88,000 telephone interviews and 63,000 on-site interviews were conducted along the Atlantic coast in 1991. The extensive interviews regarding bluefish result in an accurate survey of this species.

27. COMMENT: More effort should be spent on compiling accurate data for stock assessment and product landings. (20)

RESPONSE: The Department uses the best information available for both stock assessments and landings. The data include commercial landings data collected by the NMFS, information from biological sampling programs conducted by the NMFS, and data from other states.

The Department agrees that more resources should be devoted to better data collection. The New Jersey Marine Fisheries Council and Department are currently evaluating the feasibility of implementing a data collection system for commercial landings through a license to buy and sell fish. Such a system might provide more timely and accurate landing information.

28. COMMENT: The recreational harvest of bluefish by hook and line that is sold should not be counted against the commercial quota for bluefish. (5)

RESPONSE: In order to sell bluefish taken by hook and line, an individual must obtain a commercial bluefish permit from the National Marine Fisheries Service. The National Marine Fisheries Service requires that bluefish sold by commercial permittees who harvest by hook and line be considered part of the commercial quota for bluefish. The commercial hook and line quota for bluefish is 1.8 percent of the total commercial bluefish quota, as determined from the State's historic commercial landing data. Commercial hook and line landings of bluefish do not affect the commercial bluefish quotas landed with other types of gear.

29. COMMENT: The commenter indicated that the spring gill net season closure (adopted in 1992) has already reduced his weakfish harvest by 50 percent. His major by-catch harvest of weakfish is in May and June and the proposal increases the closure by 17 days. (10)

RESPONSE: The weakfish provisions are intended to be as equitable as possible to all user groups and the Department believes the regulations are fair as possible. Although the commenter's by-catch of weakfish may be reduced, his directed fishery should not be affected.

30. COMMENT: The proposed closed season for weakfish, May 21 through September 2 and October 20 and 26, is unfair to the Delaware Bay gill net fishermen and favors the Atlantic Ocean gill net fishermen. The season will close just as fishing starts in the bay (Delaware) and open when fishing ends in the bay (Delaware). (19, 20)

RESPONSE: The season closures were designed to reduce the overall gill net weakfish catch by the required amount and to distribute this reduction equitably between the Delaware Bay and the Atlantic Ocean gill net fishermen. The season is based on data from the 1989. 1990 and 1991 gill net weakfish catch and should result in similar landings reductions for Atlantic, Monmouth and Ocean counties and for Cape May, Cumberland and Salem counties. According to the 1989-91 mean landings, the counties of Cape May, Cumberland and Salem landed 50 percent of their total catch before the May 20 closure would commence under these rules. However, Cumberland County and, to a lesser extent, Salem County, when considered separately from Cape May, may suffer a greater proportional reduction in landings compared to the three Delaware Bay counties considered together or compared to Atlantic, Monmouth and Ocean counties. The Department and the Council's Weakfish Committee will meet with gill net fishermen in the spring to consider other viable options.

31. COMMENT: The commercial hook and line bluefish season should be changed to include the time of year the commenter is able to catch bluefish, namely the months of October, November and December. (18)

RESPONSE: The bluefish provisions were developed after several meetings of the Council's Bluefish Committee which was composed of council members and representatives of the various user groups. The fall closure was selected, since it did not interfere with the period of highest hook and line landings. Seventy-eight percent of the commercial hook and line landings occur from June through August.

N.J.A.C. 7:25-18.13

32. COMMENT: There should be an allocation of striped bass for commercial fishermen. (5)

RESPONSE: An existing statute (N.J.S.A. 23:5-45.1) prohibits the sale of striped bass in New Jersey. The Striped Bass Trophy Program allocation of 63,800 pounds established under Amendment 4 to the ASMFC striped bass FMP cannot be used in a New Jersey commercial fishery unless the legislature repeals N.J.S.A. 23:5-45.1. The new rule, N.J.A.C. 7:25-18.13, makes no substantive amendments and simply repeals and readopts the Trophy Program's provisions in a discrete section of the subchapter.

N.J.A.C. 7:25-18.14(k)

33. COMMENT: The Atlantic Coastal Fisheries Cooperative Management Act of 1993 applies specifically and only to species FMPs not covered by Federal plans under the Magnuson Conservation and Management Act. (6)

RESPONSE: The Atlantic Coastal Fisheries Cooperative Management Act of 1993 (ACFCMA) states that the Secretary of the U.S. Department of Commerce may implement a program to support an ASMFC fishery management plan, in the absence of an approved and implemented management plan promulgated pursuant to the Magnuson Fishery Conservation and Management Act (MFCMA). However, the ASMFC is not precluded from developing and promulgating management plans for particular species within state waters, regardless of the existence of an approved fishery management plan adopted under the MFCMA. The ACFCMA requires the ASMFC to prepare and adopt coastal fishery management plans to conserve coastal fishery resources, including fisheries located in both state waters and the Exclusive Economic Zone (Federal waters). In preparing a fishery management plan for such species, the ASMFC must consult with the appropriate Regional Council established under the Magnuson Act to determine where the ASMFC plan may complement the Regional Council fishery management plan. In this instance, the majority of the winter flounder fishery is landed within the State's waters.

34. COMMENT: The State regulations will establish a dual set of winter flounder regulations and legally there is a problem since the state regulations may be interpreted to apply in Federal waters. There should be one set of regulations and the Federal regulations are adequate for the resource. (2, 6, 7)

RESPONSE: The Department disagrees that the Federal regulations are adequate to protect the winter flounder resource. In addition, the State must comply with the Atlantic States Marine Fisheries Commission (ASMFC) Winter Flounder Plan which requires a 44 percent reduction in exploitation to maintain an adequate spawning stock; otherwise, the ASMFC may recommend and the U.S. Secretary of Commerce may impose a moratorium on the fishery. The Federal regulations alone do not accomplish the ASMFC's required reduction, especially since the best available data indicate that the majority of the recreational and commercial winter flounder fisheries occur in State waters. Therefore, reliance on National Marine Fisheries Service regulations does not adequately manage the majority of the fishery, nor does such reliance ensure compliance with the ASMFC winter flounder plan.

35. COMMENT: The proposed winter flounder regulations are arbitrary and not based on science or rational. The numbers and levels of reduction used to determine pound limits were improper. (2, 23)

RESPONSE: The Department disagrees with the commenters' statements. The winter flounder management plan is based on the best available scientific data. Examples of New Jersey data include tag and recapture data, age and growth data, commercial and recreational landings data and size at sexual maturity data. The methodology used to

You're viewing an archived copy from the New Jersey State Library.

prepare the fishery management options have been carefully reviewed by the Atlantic States Marine Fisheries Commission Winter Flounder Technical Committee and the methodology conforms to standard scientific and mathematical requirements.

36. COMMENT: Federal regulations supersede state regulations when both exist and the proposed winter flounder regulations should apply only in State waters. (2, 6)

RESPONSE: The winter flounder fishery in New Jersey is composed of predominantly resident fish. The species typically spawns and resides in the State's estuaries during the colder months and in the nearshore ocean waters during the warmer months. Tagging information from approximately 15,000 fish indicates a very limited offshore migration, with the vast majority of fish returning to the estuaries from which they were tagged. Consequently, the winter flounder fishery is also pursued primarily within State waters. The recreational fishery accounts for about 64 percent of the annual harvest and is conducted solely within State waters. The commercial fishery is split between State and Federal Waters, approximately 61 percent and 39 percent, respectively. The regulations are designed not only to comply with the ASMFC plan, but also to effectively manage the fishery.

37. COMMENT: The commenters indicated they have no faith in Federal numbers. The numbers were compiled on winter flounder with no input from the commercial fishery since there was no commercial representation at the meetings when the numbers were developed. Therefore, the basis of the 8-½ months closed season for winter flounder is ludicrous. (8, 23)

RESPONSE: The Department believes the commenters are referring to the fishery landings data collected by the National Marine Fisheries Service (NMFS). The Federal numbers used in the proposal represent the best available information. The Department and Council are currently reviewing the feasibility of developing a state level data collection system by instituting a license to buy and sell fish. This license might provide a better mechanism to collect timely and accurate commercial landings data.

The Department disagrees with the comment that data and data analysis were collected and completed with no input from the commercial fishery and that there was no commercial representation at meetings. All of the data used to develop winter flounder management regulations was collected in New Jersey. Fishery management options were developed with the assistance of the New Jersey Winter Flounder Committee, comprising of Marine Fisheries Council members and representatives of commercial and recreational fisheries. Commercial representatives included a fyke netter and otter trawlers. All commercial representatives were given a full opportunity to participate in the management process via meetings, mailings and phone calls. Some representatives chose not to attend meetings or respond to mailings, but the Department in no way excluded commercial fishermen from the participation in the adoption of this amendment.

38. COMMENT: An 11 inch minimum size for winter flounder is better than the previous 10 inches because the 11 inch fish is more marketable. A 12 inch fish may be even more marketable but there are so many 11 inch fish around, it would be a crime to kill them. (7)

RESPONSE: The Department agrees that a larger commercial size limit is more appropriate for winter flounder, both economically and biologically. The purpose of increasing the otter trawl cod and mesh size to five inches is to allow undersized fish to escape, thereby reducing mortality of small fish. All provisions of the rules dealing with winter flounder are aimed at reducing exploitation of all size groups of fish by increasing size limits, instituting seasons, and requiring minimum mesh sizes. The Department does not support the killing of undersized fish and believes that the adoption will reduce winter flounder mortality.

39. COMMENT: Habitat issues such as dredge spoils and habitat loss should be addressed as mandated by the winter flounder plan. (5, 23)

RESPONSE: In New Jersey, habitat issues are primarily regulated by an aggressive coastal management program under the provisions of the federal Coastal Zone Management Act. The Division of Fish, Game and Wildlife maintains an Office of Environmental Review that interacts with permitting agencies at all government levels in order to reduce adverse impacts to fisheries habitat. The Bureau of Marine Fisheries maintains on staff regional biologists who are responsible for commenting on coastal activities that may affect fisheries habitat. The specific habitat issues identified in the winter flounder management plan are addressed regularly by the Office of Environmental Review and regional biologists, not only for winter flounder but for all fisheries resources. The Rules on Coastal Zone Management at N.J.A.C. 7:7E, addresses several of the specific habitat issues addressed in the management plan, including buffer zones, stormwater runoff, general water quality, surface water use, outfalls, intakes, location of docks and piers, maintenance dredging, new dredging and dredged material disposal. In addition, as a matter of policy, the Department has adopted dredging restrictions to protect spawning winter flounder.

The Department actively intervenes to the extent of its authority to protect winter flounder habitat, as required by the ASMFC Fishery Management Plan for Inshore Stocks of Winter Flounder, through the Department's administration of the Rules on Coastal Zone Management, through the staff of the Division of Fish, Game and Wildlife, Office of Environmental Review and through staff regional biologists.

40. COMMENT: The winter flounder seasonal closure for otter trawlers is an excessive 90 percent reduction of the permissible fishery and the mesh size is wrong. (5)

RESPONSE: The Department disagrees with the commenter's statement. The ASMFC Winter Flounder Management Plan requires a 44 percent reduction in exploitation for all fisheries. For the base years of 1991 to 1993, otter trawlers landed an average of 230,355 pounds of winter flounder per year. Seasonal closures for otter trawlers reduce this harvest by 49,219 pounds after accounting for a 50 percent discard mortality and a 10 percent recoupment rate (the estimated rate that fishermen will increase harvest during an open fishing season due to not being able to fish for a period of time as a result of a seasonal closure). Therefore, the harvest is reduced 21.7 percent due to a seasonal closure. The remainder of the necessary 44 percent reduction is achieved through an increased size limit and mesh size. An increase in mesh size is also appropriate due to the increase in the size limit for otter trawlers. The proposed 5.0 inch otter trawl mesh size will allow for retention of 75 percent of 12 inch winter flounder, and will release approximately 50 percent of fish 11 inches or less. Allowing small fish to escape will benefit the fishery by reducing discard mortality of undersized fish.

41. COMMENT: The September NMFS data for winter flounder landings are bad. New Jersey has no statistics on the size of fish caught in the otter trawl fishery. (5)

RESPONSE: The Department believes the commenter is referring to the fishery landings data collected by the National Marine Fisheries Service (NMFS). As explained previously, Federal numbers used in the proposal represent the best available information. The Department and Council are reviewing the feasibility of creating a State data collection system through the imposition of a license to buy and sell fish. This license would provide a means to collect timely and accurate commercial landings data.

As part of the preparation of the ASMFC Winter Flounder Management Plan, information was collected from several sources. These included NMFS port agents who have, in the past, collected data on the lengths of commercially harvested fish. In addition, information on the lengths of fish available to be harvested by the otter trawl fishery is routinely collected by the Department during its Ocean Stock Assessment Survey. The ASMFC also reviewed mesh retention studies conducted by the State of Connecticut which accurately describe lengths of fish harvested by various meshed otter trawls. All of these data were used to prepare the ASMFC Winter Flounder Management Plan.

42. COMMENT: There is no problem with the winter flounder stocks. The stocks are not in bad shape and the regulations are unnecessary. (7, 23)

RESPONSE: The Department disagrees with the commenter's statement. The modest interim goal of the ASMFC Winter Flounder Management Plan is to preserve winter flounder stocks at 30 percent of their maximum spawning potential. This spawning potential level is identified as the minimum conservation level needed to allow the species to rebuild. Results of population modeling using New Jersey data indicate that exploitation must be reduced 44 percent to achieve the interim goal. These results do not support the comment that there is no problem with winter flounder stocks and that the regulations are unnecessary.

43. COMMENT: If flounder population is endangered, all harvesting of winter flounder should be stopped for two years. (21)

RESPONSE: The Department has not suggested that winter flounder are endangered, but that the stock is being harvested at a rate higher than recommended by the ASMFC Winter Flounder Management Plan. Although imposition of a two-year moratorium on winter flounder harvests would allow stocks to rebound at a faster rate, the Department believes that a moratorium would result in unnecesary adverse social and economic impacts.

You're viewing an archived copy from the New Jersey State Library.

44. COMMENT: Minimum size for winter flounder should be 11 inches, not 12 inches. A 40 percent reduction in (otter trawl) catch would be achieved by this increase in size limit alone. (5, 7)

RESPONSE: A minimum size of 11 inches rather than 12 inches for the otter trawl fishery could be applied, but this would require a shorter harvest season to comply with the requirements of the ASMFC Winter Flounder Management Plan. Members of the New Jersey Winter Flounder Management Committee, including commercial fishermen, indicated a preference for a longer season with a larger size limit to allow for more fishing days. The Department disagrees that an 11 inch size limit would reduce exploitation by 40 percent. The data available indicate that an extremely short season is required with an 11 inch size limit to achieve the ASMFC required reductions.

45. COMMENT: The State should adopt an 11 inch winter flounder size limit with a 5½ inch cod end net along with the Federal requirement of 80 days out of the fishery. (2)

RESPONSE: The suggested size limit, cod end mesh size and 80 day closure does not accomplish the ASMFC required 44 percent reduction in exploitation. The 80 day Federal closure still allows fishermen to harvest up to 500 pounds of winter flounder per day, provided that it does not constitute greater than 10 percent of the total catch. In addition, the 80 days out of the fishery allows fishermen to choose to not fish during traditional low winter flounder harvest periods, which would not meet the ASMFC required reduction of winter flounder exploitation.

46. COMMENT: A proposal must be a viable conservation and economic program. These regulations are not economically viable and returning winter flounder to the water during closed seasons is not conservation. (2, 5, 7, 23)

RESPONSE: The rules do reflect consideration of the conservation and economic impacts. The winter flounder provisions are based on the conservation goals required by the ASMFC Winter Flounder Management Plan. Therefore, the Department believes the provisions to be based on sound conservation objectives. The Department is also aware of the economic impacts of the provisions. In preparing the proposal, the Department balanced the need to protect fisheries resources against the economic impacts of the requirements. In so doing, the Department and the Marine Fisheries Council invited representatives of the affected fisheries to work with them to develop the rules. The Department also determined that to minimize the impact of the rule any more would further endanger fisheries resources. It would also impair New Jersey's ability to comply with ASMFC fishery management plans, thus risking imposition of a moratorium for winter flounder in State waters.

The Department disagrees that returning fish to the water during a closed season is not conservation. Certain levels of discard mortality exist for all fisheries, and these discard mortalities are incorporated into exploitation reduction calculations to determine closed seasons. Depending on the fishery, certain percentages of returned fish do survive and directly account for reductions in exploitation, thereby conserving the resource.

47. COMMENT: New Jersey winter flounder landings are less than one percent of coastwide landings for 1979 to 1988, so why should New Jersey have such strong regulations? (5, 6, 7, 23)

RESPONSE: New Jersey needs to have strong winter flounder regulations to manage its stocks of winter flounder. Results of tagging studies conducted in New Jersey indicate that winter flounder do not undertake long distance migrations, are basically resident fish, and have a strong tendency to return to the same estuary every year to spawn. The harvest data for winter flounder in most other states bears no relation to the data for New Jersey fish. Therefore, comparing harvest percentages between states is invalid. New Jersey fishermen are harvesting New Jersey fish, and the regulations are designed to conserve New Jersey's winter flounder for New Jersey's fishermen.

48. COMMENT: The State should not have an open season for winter flounder during their spawning season. (9, 21)

RESPONSE: In New Jersey, winter flounder spawn in estuaries and possibly nearshore coastal waters principally during the months of February and March. Otter trawling is illegal within two miles of the coastline and within the estuaries. Therefore, the resource is not subjected to this fishery when and where the fish are spawning. Fyke netting and a recreational fishery take place when and where winter flounder spawn. Size limits have previously been instituted to allow winter flounder to spawn at least once before entering these fisheries and discard mortality is low from these fisheries. These factors help to reduce the impacts of the fishery on spawning winter flounder.

49. COMMENT: The fishery is closed during the (otter trawl) best catch period for winter flounder. (9)

RESPONSE: The winter flounder closure for otter trawling does not include the months of April and May, which were the two highest landing months during the years of 1991 to 1993, according to commercial landing data provided by the National Marine Fisheries Service. The regulatory closure is designed to permit harvest of winter flounder during the highest harvest period, while at the same time complying with the requirements of the ASMFC Winter Flounder Management Plan.

50. COMMENT: The winter flounder regulations are a vendetta against Belford. (2, 5, 23)

RESPONSE: The Department disagrees with the commenter's statement. The winter flounder proposal has been prepared to meet the ASMFC Winter Flounder Management Plan, which encompasses the states of Maine through Delaware. The conservation goal of preserving 30 percent of the maximum spawning potential of winter flounder stocks applies throughout all of the states. The ASMFC Winter Flounder Plan is not directed to any single port in any particular state.

51. COMMENT: The commercial winter flounder otter trawl fishery in New Jersey should include a five inch bag, 12 inch minimum size and no closed season. (5, 23, 25)

RESPONSE: A five inch otter trawl mesh size and a 12 inch size limit would reduce exploitation of winter flounder in the otter trawl fishery by about 22 percent. The ASMFC Winter Flounder Management Plan requires a 44 percent reduction in exploitation. Therefore, the commenters' proposed management measures do not meet the ASMFC requirements. A seasonal closure is also necessary to meet the full reduction specified by ASMFC.

52. COMMENT: If the season was kept open, all fishermen (otter trawl) would fish for winter flounder with large mesh and kill less. If the season is closed, fishermen will use smaller mesh, fish for squid and other small fish, and kill more winter flounder, especially juveniles. (2, 7)

RESPONSE: The Department does not disagree that smaller mesh size results in the harvest of smaller fish. However, the exploitation reduction estimates included in the ASMFC Winter Flounder Management Plan include levels of discard mortality for all fisheries during closed seasons. Mortality of winter flounder as described in the commenters' statement has therefore been incorporated into exploitation reduction calculations to determine closed seasons. The Department also is unaware of any data that supports the statement that more winter flounder would be killed in a non-directed winter flounder fishery during a closed season, than would be killed in a directed fishery for winter flounder during an open season. Landings data indicate that small mesh fisheries for other species such as whiting and squid, will be conducted, regardless of whether a directed winter flounder fishery is open or closed.

53. COMMENT: Five hundred pounds should be the definition of a directed fishery for winter flounder. (5, 6, 7, 23, 25)

RESPONSE: The definition of a directed winter flounder fishery as 100 pounds onboard is consistent with the definitions for directed fisheries for summer flounder and weakfish. See N.J.A.C. 7:25-18.14. In addition, the ASMFC Winter Flounder Technical Committee has adopted the 100 pound definition as appropriate for the otter trawl fishery. The Department, therefore, believes that a directed fishery definition of greater than 100 pounds onboard would not receive ASMFC approval and could result in a total moratorium on winter flounder.

54. COMMENT: Under Amendment 5 of the Northeast Multispecies Plan, fishermen holding Federal multispecies permits must declare a set amount of time out of the fishery, including 20 days in May, or between March and May, each year. This means that fishermen lose this 20 days of fishing in addition to the State landing restrictions between June 1 and March 14. (2, 6)

RESPONSE: The Northeast Multispecies Plan covering Federal waters requires that fishermen holding a Federal multispecies permit declare 20 days out of the fishery between March and May. However, the Multispecies plan still allows fishermen to harvest up to 500 pounds of winter flounder per day during the 20 day period, so long as the 500 pounds does not exceed 10 percent of the total harvest of all species. Therefore, the Federal requirements do not close the fishery for 20 days during the Department's otter trawl season, but simply limit the catch to the smaller of 500 pounds or 10 percent of the total per trip harvest.

N.J.A.C. 7:25-18.15

55. COMMENT: Since Atlantic sturgeon grow eight inches per year, increasing the gill net mesh should be sufficient to maintain an unlimited harvest. (1)

You're viewing an archived copy from the New Jersey State Library.

RESPONSE: As indicated in the response to Comment 3, to protect Atlantic sturgeon from further stock depletion, the ASMFC recommended imposing (1) a minimum size limit of 84 inches, (2) a moratorium on all harvest, or (3) the adoption of alternative measures that are conservationally equivalent. An unlimited harvest would only be acceptable at a minimum size limit of 84 inches. The Sturgeon Committee, which is entirely composed of sturgeon permit holders, voted to select a smaller minimum size limit and a quota system, as identified as Option 3. Option 3 allows states to implement size limits less than the recommended 84 inches, if the state successfully demonstrates to the ASMFC that a reduced quota at a lower size limit is conservationally equivalent to an 84 inch minimum size limit. The Department has maintained the existing minimum size limit of 60 inches and reduced the annual sturgeon harvest to the ASMFC's permissible annual 15,475 pound landing.

Summary of Hearing Officer's Recommendations and Agency Responses:

Steve Herb, Assistant Director, Division of Fish, Game & Wildlife served as hearing officer at the November 28 and November 29, 1994 public hearings regarding the Department's proposal on weakfish, bluefish, winter flounder, Atlantic sturgeon and lobster. After reviewing testimony presented at the public hearings and written comments received during the comment period, he recommended that the Department adopt the repeal and new rule at N.J.A.C. 7:25-18.12, the new rule at N.J.A.C. 7:25-18.13 and the amendments at N.J.A.C. 7:25-18.1, 18.4, 18.5, 18.14, with the changes described below. The Department accepts the recommendations. The record of the public hearing may be inspected by contacting Janis E. Hoagland, Esq., Department of Environmental Protection, Office of Legal Affairs, CN 402, Trenton, NJ 08625.

1. At N.J.A.C. 7:25-18.1(a), the minimum size limit for conch appears reflecting an amendment adopted effective December 19, 1994. See 26 N.J.R. 5011(a).

2. At N.J.A.C. 7:25-18.1(a)2 and 18.15(i), the language is modified to clarify that the dressed length of an Atlantic sturgeon is the length after the entire head, collar and tail have been removed.

3. At N.J.A.C. 7:25-18.1(b), the minimum size limit for weakfish is increased to 14 inches. This action, combined with the modification recommended in item 4 below, will bring New Jersey into compliance with the recreational fishing provisions of the Atlantic States Marine Fisheries Commission's Weakfish Management Plan. See responses to Comments 7 and 9 in the Summary of Public Comments and Agency Response for further explanation of this change.

4. At N.J.A.C. 7:25-18.1(c), the open season for weakfish is changed to "no closed season" and the possession limit for weakfish is increased to 14 fish. This change, along with the modification recommended in item 3 above, will bring New Jersey into compliance with the recreational fishing provisions of the Atlantic States Marine Fisheries Commission's Weakfish Management Plan. See responses to Comments 7 and 9 in the Summary of Public Comments and Agency Response for further explanation of this change.

5. At N.J.A.C. 7:25-18.5(g)2v, the winter flounder open season for fyke nets is modified to run from November 1 through January 21. See responses to Comments 16, 19 and 20 in the Summary of Public Comments and Agency Response for further explanation of this change.

6. At N.J.A.C. 7:25-18.5(g)2vi, the language is modified to clarify that the size limit of 10 inches for winter flounder harvested by fyke nets applies during the open season. See responses to Comments 16, 19 and 20 in the Summary of Public Comments and Agency Response for further explanation of this change.

7. At N.J.A.C. 7:25-18.5(g)11viii, provisions regarding the use of conch pots appear, reflecting an amendment adopted effective December 19, 1994. See 26 N.J.R. 5011(a).

8. At N.J.A.C. 7:25-18.12(a)1 and (b)2, the references to the gill net seasons for weakfish and bluefish for calendar year 1994 are deleted.

9. At N.J.A.C. 7:25-18.14(k)2, the language is modified to clarify that the 12 inch minimum size limit applies to winter flounder harvested by all commercial gear with the exception of fyke nets. The rule as proposed had specified that the 12 inch minimum size limit was only applicable to otter and beam trawls. However, the Summary of the proposal expressly stated that the 12 inch minimum size limit applies to all commercial gear with the exception of fyke nets. See 26 N.J.R. 4278. This rule section is corrected to reflect the intent of the proposal.

10. At N.J.A.C. 7:25-18.14(k)4, the winter flounder season is extended through May 31 for all commercial gear types with the exception of fyke nets. The proposal contained a typographical error which indicated that the season ended on May 14. As discussed in the Summary of the proposal, the winter flounder season for this gear type was proposed to be from February 1 through May 31. See 26 N.J.R. 4278. The end of the season date is, therefore, corrected to May 31.

11. At N.J.A.C. 7:25-18.15(h), the word "throat" is replaced by the word "nape" to more accurately reflect the location for the placement of an Atlantic sturgeon possession tag. The Department will send each Atlantic sturgeon permit holder a diagram showing the correct tag placement location.

Executive Order No. 27 Analysis

On December 20, 1993, President Clinton signed the Atlantic Coastal Fisheries Cooperative Management Act of 1993 (ACFCMA). The purpose of this Act is to support and encourage the development, implementation and enforcement of effective interstate conservation and management of Atlantic coastal fishery resources.

To further this purpose, the Act authorizes the Atlantic States Marine Fisheries Commission (ASMFC) to prepare and adopt coastal Fishery Management Plans (FMPs) to provide for the conservation of coastal fishery resources. These FMPs specify the conservation and management goals necessary to promote the conservation of a specified fishery. The Act further requires the ASMFC to identify states which must implement and enforce a specific FMP. Such identified states, including New Jersey, are required to adopt fishery management measures which will bring the state into compliance with the approved FMP by an established compliance date. If the ASMFC determines that a state has failed to implement an approved FMP, it will declare that state out of compliance. Such state is then subject to a Federal moratorium on all fishing (both commercial and recreational) in the specified fishery within the waters of the non-complying state until it comes into compliance with the FMP. The Secretary of Commerce must declare a Federal moratorium if he finds that the state has failed to implement a moratorium if he finds that the state has failed to implement a specific FMP and that the measures which the state failed to implement are necessary for the conservation of the fishery in question.

In accordance with its authority under the ACFCMA, the ASMFC promulgated FMPs for winter flounder, bluefish, weakfish, American lobster and Atlantic sturgeon. New Jersey was identified as one of the states required to implement these FMPs. The within amendments are designed to bring New Jersey into compliance with these FMPs. Consequently, the within amendments do not exceed the requirements of the ACFCMA.

Full text of the adoption follows (additions to proposal indicated in boldface with asterisks ***thus***; deletions from proposal indicated in brackets with asterisks *[thus]*):

7:25-18.1 Size and possession limits

(a) A person shall not purchase, sell, offer for sale, or expose for sale any species listed below less than the minimum length, measured in inches, except as may be provided elsewhere in this subchapter, and subject to the specific provisions of any such section. Fish length shall be measured from the tip of the snout to the tip *[fo]* ***of*** the tail.

Species	Scientific Name	Minimum Size (inches)
Atlantic Mackerel	*Scomber scombrus*	7
Atlantic Sturgeon	*Acipenser oxyrhynchus*	60
Black Sea Bass	*Centropristis striata*	8
Bluefish	*Pomatomus saltatrix*	9
Conch	*Busycon carica*	5
	Busycotypus canaliculatum	
	Busycon contrarium	
Kingfish	*Menticirrhus saxatilis*	8
	Menticirrhus americanus	
Porgy (Scup)	*Stenotomus chrysops*	7
Goosefish (Monkfish)	*Lophius americanus*	17
Winter Flounder	*Pleuronectes americanus*	12

1. In addition to the total minimum goosefish size, all goosefish tails possessed must be at least 11 inches in length from the anterior portion of the fourth cephalic dorsal spine to the end of the caudal

You're viewing an archived copy from the New Jersey State Library.

fin. The total weight of all goosefish livers landed shall not be more than 30 percent of the total weight of all goosefish tails landed or 12 percent of the total weight of all goosefish landed.

2. A person may not possess a dressed Atlantic sturgeon for sale less than 36 inches in length, subject to the additional provisions in N.J.A.C. 7:25-18.15. Dressed length is the length of an Atlantic sturgeon after the ***entire*** head, collar, tail and viscera have been removed.

(b) A person shall not take from the marine waters in the State or have in his or her possession any species listed below less than the minimum length, measured in inches, except as may be provided elsewhere in this subchapter, and subject to the specific provisions of any such section. Fish length shall be measured from the tip of the snout to the tip of the tail.

Species	Scientific Name	Minimum Size (inches)
Atlantic Cod	*Gadus morhua*	19
Atlantic Sturgeon	*Acipenser oxyrhynchus*	60
Cobia	*Rachycentron canadum*	37
Haddock	*Melanogrammus aeglefinus*	19
King Mackerel	*Scomberomorus cavalla*	23
Pollock	*Pollachius virens*	19
Red Drum	*Sciaenops ocellatus*	18
Spanish Mackerel	*Scomberomorus maculatus*	14
Summer Flounder (Fluke)	*Paralichthys dentatus*	14
Tautog (Blackfish)	*Tautoga onitis*	12
Weakfish	*Cynoscion regalis* *Cynoscion nebulosus*	*[13]* ***14***
Winter Flounder	*Pleuronectes americanus*	10

(c) A person angling with a hand line or with rod and line or spearfishing shall not take in any one day or possess more than the possession limit specified below for each species listed during the open season except as may be provided elsewhere in this subchapter, and subject to the specific provisions of any such section. A person angling or spearfishing shall not possess any species listed below during the closed season for that species.

Species	Open Season	Possession Limit
Bluefish	No closed season	10
King Mackerel	No closed season	5
Spanish Mackerel	No closed season	10
Summer Flounder	April 30-October 30	8
Weakfish	*[January 1-October 17 and November 1-December 31]* ***No closed season***	*[10]* ***14***
Winter Flounder	March 1-May 31 and September 15-December 31	No limit

(d) A person shall not take in any one day or possess more than the possession limit specified below for each species listed, except as may be provided elsewhere in this subchapter, and subject to the specific provisions of any such section.

Species	Possession Limit
Atlantic Sturgeon	0
Cobia	2
Red Drum	5, only 1 of which may be greater than 27 inches

(e) Except as provided in (f) below, a person shall not remove the head, tail or skin, or otherwise mutilate to the extent that its length or species cannot be determined, any species with a minimum size limit specified at (b) above or any other species of flatfish, except after fishing has ceased and such species have been landed to any ramp, pier, wharf or dock or other shore feature where it may be inspected for compliance with the appropriate size limit.

(f) Special provisions applicable to a Special Fillet Permit are as follows:

1. A party boat owner may apply to the Commissioner for a permit for a specific vessel, known as a Special Fillet Permit to fillet species specified at (b) above at sea;

2. For purposes of this section, party boats are defined as vessels that can accommodate 15 or more passengers as indicated on the Certificate of Inspection issued by the United States Coast Guard for daily hire for the purpose of recreational fishing;

3. The Special Fillet Permit shall be subject to the following conditions:

i. Once fishing commences, no parts or carcasses of any species specified in (b) above and no flatfish parts or carcasses shall be discarded overboard; of the species specified at (b) above, only whole live fish may be returned to the water;

ii. No carcasses of any flatfish or species listed at (b) above shall be mutilated to the extent that its length or species cannot be determined;

iii. All fish carcasses of species specified at (b) above shall be retained until such time as the vessel has docked and been secured at the end of the fishing trip adequate to provide a law enforcement officer access to inspect the vessel and catch;

iv. No fillet of any flounder shall be less than seven inches in length during the period of May 1 through October 31 or less than five inches in length during the period of November 1 through April 30;

v. No fillet or part of any species listed below shall have the skin removed and no fillet shall be less than the minimum length in inches specified below.

Species	Minimum fillet or part length
Atlantic Cod	13 inches
Cobia	26 inches
Haddock	13 inches
King Mackerel	16 inches
Pollock	13 inches
Red Drum	13 inches
Spanish Mackerel	10 inches
Tautog	7 inches
Weakfish	9 inches

vi. Fish carcasses from the previous trip shall be disposed of prior to commencing fishing on a subsequent trip;

vii. Violation of any of the provisions of the Special Fillet Permit shall subject the violator to the penalties established pursuant to N.J.S.A. 23:2B-14 and shall result in a suspension or revocation, applicable to both the vessel and the owner, of the Special Fillet Permit according to the following schedule;

(1) First offense: 30 days suspension;

(2) Second offense: 90 days suspension; and

(3) Third offense: Revocation of permit, rendering the vessel and the owner not eligible for permit renewal regardless of vessel ownership.

viii. Upon receipt of the notice of suspension but prior to the suspension or revocation of the Special Fillet Permit, the permittee has 20 days to request a hearing from the Department. The hearing shall be conducted pursuant to the Administrative Procedure Act, N.J.S.A. 52:14B-1 et seq. and 52:14F-1 et seq., and the Uniform Administrative Procedure Rules, N.J.A.C. 1.1. If a request for a hearing is not received by the Department within 20 days of the permittee's receipt of the notice of suspension, the permit suspension or revocation will be effective on the date indicated in such notice.

(g)-(i) (No change.)

(j) Except for striped bass hybrids that are the products of commercial aquaculture, a person shall not possess more than the possession limit established pursuant to N.J.S.A. 23:5-45.1, whether striped bass or striped bass hybrid, while on or angling in the marine waters of this State.

(k)-(l) (No change.)

(m) Any person violating the provisions of (h) through (l) above shall be liable for a penalty of $100.00 for each fish taken or possessed. Each fish taken or possessed shall constitute a separate and distinct offense.

(n) The Commissioner, with the approval of the New Jersey Marine Fisheries Council, may modify the fishing seasons, minimum size limits and possession limits specified in this section by notice

You're viewing an archived copy from the New Jersey State Library.

in order to maintain and/or to come into compliance with any fishery management plan approved by the Atlantic States Marine Fisheries Commission pursuant to 16 U.S.C. §5104(b). The Department shall publish notice of any such modification in the New Jersey Fish and Wildlife Digest and the New Jersey Register, and shall submit a news release to individuals on the Division of Fish, Game and Wildlife outdoor writers' mailing list.

Recodify existing (p) and (q) as (o) and (p) (No change in text.)

7:25-18.4 Spearfishing

It shall be lawful to take, catch, or kill all species of fish by means of spearfishing, during the respective open season, except for those species of fish specifically protected. For the purpose of this rule, spearfishing shall mean the taking of fish by means of a spear, harpoon, or other missile, or by hand, while completely submerged in the marine waters of the State.

7:25-18.5 General net regulations

(a)-(f) (No change.)

(g) Individuals intending to take fish with a net in the marine waters of this State pursuant to N.J.S.A. 23:5-24.2 shall, as required, apply to the Commissioner for a license and/or permit. To be eligible to purchase a 1992 license for a drifting, staked or anchored gill net the applicant shall have purchased a gill net license during 1990 or 1991 or a 1992 license prior to May 1, 1992 or provide documented proof of active military service within one year of application. An applicant who does not meet the above requirements must file an application, in person, with the Department in each of two consecutive years. Such an applicant shall be eligible for gill net licenses in the following calendar year. Beginning in the license year (January 1-December 31) 1993, an applicant for a gill net license must have possessed a gill net license in one of the two previous years. Failure to purchase a gill net license in one of the prior two years shall subject the applicant to the two year waiting period described above. Availability of Delaware Bay Gill Net Permits shall be determined pursuant to N.J.A.C. 7:25-18.6 through 18.11. Upon receipt of the application, and the prescribed license fee, the Commissioner may, in his or her discretion, issue single season licenses and/or permits as specified for each net type for the taking of fish with nets only as follows:

1. (No change.)

2. Fykes shall have a length, including leaders, which shall not exceed 30 fathoms and no part of the net or leaders shall be constructed of monofilament or have a mesh larger than five inches stretched. Fyke nets may be used for all species except those specifically protected.

i.-iv. (No change.)

v. ***Winter flounder may be taken by fyke net during the season of November 1 through January 21.** Any winter flounder taken by fyke net *[during the month of December or March]* ***from January 22 through April 30*** shall not be retained and must be immediately returned to the water.

vi. A person shall not possess, purchase, sell, offer for sale or expose for sale any winter flounder less than 10 inches in length taken by fyke nets during the *[months of November, January, February and April]* ***open season specificied in (a)2v above*.**

vii. The Commissioner, with the approval of the New Jersey Marine Fisheries Council, may modify the fishing seasons and minimum size limits for winter flounder specified at (g)2v and vi above by notice in order to maintain and/or to come into compliance with any fishery management plan approved by the Atlantic States Marine Fisheries Commission pursuant to 16 U.S.C. §5104(b). The Department shall publish notice of any such modification in the Division's commercial regulation publication and the New Jersey Register.

viii. The fyke resident fee shall be $12.00 per net. Each licensee shall notify the Department in their license application of the specific estuary in which they intend to fish the fyke net(s). Licensees shall notify the Department as to any change in the specific estuary within which the fyke net is located no later than seven days following the change in estuary. Such notice shall be in writing to:

Division of Fish, Game and Wildlife
Marine Fisheries Administration
CN 400
Trenton, NJ 08625

3.-10. (No change.)

11. Lobster or fish pots may be used for the taking of all species except those specifically protected and shall be used only in the Atlantic Ocean, Delaware Bay, Raritan Bay, and Sandy Hook Bay.

i.-iv. (No change.)

v. Effective March 20, 1995, all lobster and fish pots set north of Barnegat Inlet (LORAN C 9960-Y-43300) must be constructed to include one of the following escape vents in the parlor section of the pot located in such a manner that it would not be blocked or obstructed in normal use by any portion of the pot, associated gear, or the sea floor;

(1) A rectangular portal with an unobstructed opening not less than 1.875 inches (47.6 mm) by 5.75 inches (146.0 mm); or

(2) Two circular portals with unobstructed openings not less than 2.375 inches (0.3 mm) in diameter.

vi. Effective March 20, 1995, all lobster and fish pots must be constructed to include a ghost panel or other mechanism which is designed to create an opening to allow the escape of lobsters within 12 months after a pot has been abandoned or lost, and which meets the following specifications:

(1) The opening covered by the panel or created by other approved mechanism shall be rectangular and measure at least 3¾ by 3¾ inches, shall be located in the outer parlor section(s) of the pot, and shall be in a position which allows the unobstructed exit of lobsters or fish from the pot;

(2) The panel shall be constructed of, or fastened to the pot with, one of the following materials: wood lath; cotton, hemp, sisal or jute twine not greater than 3/16 inch in diameter; or non-stainless, uncoated ferrous metal not greater than 3/32 inch in diameter;

(3) The door of the pot may serve as the ghost panel if the door is fastened to the pot with a material specified in (g)11vi(2) above;

(4) The escape vent specified in (g)11v above may serve as a ghost panel if the escape vent is incorporated into a panel constructed of, or attached to the pot with, a material specified in (g)11vi(2) above, and, upon breakdown of the degradable materials, will create an opening of at least 3¾ by 3¾ inches for the exit of lobster or fish; and

(5) Pots constructed entirely or partially of wood shall be considered to be in compliance with this subparagraph if constructed of wood lath to the extent that deterioration of wooden component(s) will result in an unobstructed opening as specified in (g)11vi(1) above.

Recodify existing vi. as vii. (No change in text.)

*[vii.]****viii.*** A modified lobster or fish pot may be used for the taking of conchs or whelks in all marine waters of the State including the Atlantic Ocean with the exception of the Newark Bay Complex.

(1) Any such conch pot is defined as a rectangular shaped device not larger than 30 inches on any side; or a cylindrical shaped device not greater than 34 inches in diameter and 30 inches in height. Conch pots must allow for an unobstructed opening of their top surface measuring not less than eight by eight inches square or nine inches in diameter. Conch pots cannot contain a parlor, funnel, or other entrapping mechanism in the interior of the pot. Any similar configuration may be approved for use upon application to the Division and receipt of written approval. Such applications must contain a diagram detailing the shape and dimensions of the requested conch pot configuration.

(2) Conch pots may be tended only from 0400 hours (4:00 A.M.) to 2100 hours (9:00 P.M.).

(3) No conch pot shall be placed in a creek, ditch, or tributary less than 50 feet wide at mean low water, in any marked or charted channel or any manmade lagoon;

Recodify existing viii and ix ***as ix and x*** (No change in text.)

12. (No change.)

(h) (No change.)

You're viewing an archived copy from the New Jersey State Library.

7:25-18.12 Commercial fishing seasons and quotas

(a) The following provisions are applicable to the commercial harvest of weakfish:

1. A person shall not land any weakfish by the gear specified below except during the respective open season specified below or as modified by the Commissioner pursuant to (d) below.

Gear	Open Season
Otter Trawl	January 1 through July 31 and October 9 through December 31
Pound Net*[s]*	January 1 through June 6 and July 1 through December 31
[Gill Nets, through December 31, 1994]	*[January 1 through June 6, July 1 through August 31 and October 12 through December 31]*
Gill Net*[s, beginning January 1, 1995]*	January 1 through May 20, September 3 through October 19 and October 27 through December 31

2. A dealer shall not accept any weakfish landed in New Jersey taken by the respective gear types specified in (a)1 above except during the respective open season specified above or as modified by the Commissioner pursuant to (d) below.

(b) The following provisions are applicable to the commercial harvest of bluefish:

1. New Jersey's annual allocation of bluefish as determined by the National Marine Fisheries Service shall be allocated according to gear type as follows:

i. Gill Net: 60.9 percent;
ii. Pound Net: 14.9 percent;
iii. Otter Trawl: 14.7 percent;
iv. Purse Seine: 7.5 percent; and
v. Hook and Line: 1.8 percent.

2. A person shall not land any bluefish taken by the gear type specified in (b)1 above except during the respective open season specified below or as modified by the Commissioner pursuant to (d) below.

Gear Type	Open Season
[Gill Net, through December 31, 1994]	*[January 1 through June 30 and September 2 through December 31]*
Gill Net*[, beginning January 1, 1995]*	January 1 through October 10
Pound Net	May 15 through December 31
Otter Trawl	January 1 through July 31 and October 1 through December 4
Hook and Line	January 1 through September 8

3. A dealer shall not accept any bluefish landed in New Jersey taken by the respective gear type specified in (b)1 above except during the respective open season specified in (b)2 above or as modified by the Commissioner pursuant to (d) below.

4. As specified at (b)1 above, the annual bluefish quota for the purse seine fishery shall be 7.5 percent of New Jersey's annual commercial bluefish quota as allocated by the National Marine Fisheries Service. No purse seine vessel shall land and no dealer shall accept any bluefish landed in New Jersey that have been harvested by purse seine in excess of the annual purse seine quota or after the purse seine season has been closed. If the annual purse seine quota is exceeded in any one calendar year, the overharvest shall be deducted from the purse seine quota in the next subsequent calendar year(s).

5. A person angling with a handline or with rod and line shall not possess more than the possession limit for bluefish set forth at N.J.A.C. 7:25-18.1(c) except during the open commercial hook and line season and provided that the angler is in possession of a valid National Marine Fisheries Service commercial bluefish permit in the angler's name.

6. The Commissioner, or his or her designee, may close the season for the respective gear types in (b)2 above upon four days public notice of the projected date the quota for the respective gear types shall be landed. Such notice shall be sent by first class mail to all commercial docks and commercial fishing organizations on the mailing list of the Division of Fish, Game and Wildlife.

(c) For the purpose of this section, "land" shall mean to begin offloading fish, to offload fish or to enter port with fish.

(d) The Commissioner, with the approval of the New Jersey Marine Fisheries Council, may modify quotas and/or seasons specified in this section, by notice in order to maintain and/or to come into compliance with any fishery management plan approved by the Atlantic States Marine Fisheries Commission pursuant to 16 U.S.C. §5104(b). The Department shall publish notice of any such modification in the Division's commercial regulation publication and the New Jersey Register.

7:25-18.13 Striped bass trophy program

(a) Pursuant to N.J.S.A. 23:5-45.1(c), the possession of one "trophy sized" striped bass, measuring not less than 38 inches in length, will be allowed in addition to the possession limit allowed under N.J.S.A. 23:5-45.1(a), pursuant to (b) through (o) below.

(b) Any person intending to take one striped bass measuring not less than 38 inches in length in addition to his or her striped bass possession limit as specified at N.J.S.A. 23:5-45.1 shall apply to the Division for a "fish possession tag." Applications may be obtained from the following:

1. Division of Fish, Game and Wildlife
Striped Bass Trophy Fish Program
Nacote Creek Research Station
P.O. Box 418
Port Republic, NJ 08241

2. Fish checking stations, as authorized by the Division and identified by public notice in the New Jersey Register.

(c) The application form shall be completed to include the name, address and telephone number of the applicant.

(d) Applications for a fish possession tag will be accepted for participation in the trophy fish program and processed in order of receipt by the Division.

(e) Successful applicants will receive one, non-transferable fish possession tag. This tag is to be placed through the mouth and out behind the gill cover of the trophy fish and fastened to form a complete circle immediately upon capture.

(f) Any fish possession tag not utilized during the calendar year in which it was issued will be valid for subsequent calendar years except during those periods in which the Department has closed the State's waters to harvesting as provided at (1) below.

(g) Successful applicants shall keep and submit annual records of their striped bass fishing activity as requested on forms furnished by the Division. Such records shall include the name, address, and tag number(s) of the fishermen, the days and hours fished, the lengths of striped bass caught, the location of fishing activity and the type of fishing. Extra forms can be obtained from fish checking stations.

(h) A person shall not have in his or her possession at any time more than two striped bass, of which one shall be not less than the size provided for at N.J.S.A. 23:5-45.1 and the other shall be not less than 38 inches in length and shall have properly affixed, completely fastened and legal fish possession tag.

(i) Any striped bass taken under this section shall be transported to an authorized fish checking station by the person who caught the fish on the day so taken. A person shall not present for registration or permit to be registered in his or her name a striped bass which he or she did not catch. Any person who legally takes and tags a striped bass under this section and who cannot arrive at a fish checking station prior to closing time shall immediately report his or her harvest to the marine enforcement office at (609) 748-2050 and supply his or her name, the date, the time and the striped bass tag number and shall check the fish at an authorized fish checking station the following day.

(j) A person shall not possess any striped bass taken or tagged under the provisions of this section which is damaged or mutilated to the extent that its length cannot be determined, other than immediately prior to preparation or being served as food.

You're viewing an archived copy from the New Jersey State Library.

(k) An additional fish possession tag shall be provided to the angler upon recording of his or her prior legally tagged striped bass at an authorized fish checking station, provided the season has not been closed pursuant to (l) below.

(l) When, at any time during the calendar year, the Division has projected that the quota established by the Atlantic States Marine Fisheries Commission for striped bass will have been harvested within the next 72 hours under the provisions of this section, the Division will close the State's waters to any further harvesting upon two days public notice in the Newark Star-Ledger, Asbury Park Press and The Press (of Atlantic City). A notice shall also be published in the New Jersey Register.

(m) The quota described in (1) above shall be 63,800 pounds until such time as another quota is duly promulgated by the Atlantic States Marine Fisheries Commission.

(n) Upon promulgation of any change in the quota described in (1) above, the Division will provide public notice thereof in the Newark Star-Ledger, the Asbury Park Press and The Press (of Atlantic City) and the New Jersey Register.

(o) Any person violating the striped bass size or possession limits as provided for in N.J.S.A. 23:5-45.1, or this section shall be liable for a penalty of $100.00 per fish for the first offense and a penalty of $200.00 per fish for each subsequent offense. In addition, any person violating any provision of this section shall be subject to revocation from the Striped Bass Trophy Program. Any fish possession tag in such person's possession shall be invalid and shall be returned to the Division upon such person's receipt of notification of such revocation. Failure to return the tag upon notification shall subject the violator to penalties prescribed pursuant to N.J.S.A. 23:2B-14.

7:25-18.14 Otter and beam trawls

(a)-(i) (No change.)

(j) Special provisions applicable to a directed weakfish fishery are as follows:

1.-3. (No change.)

4. A person shall not land any weakfish harvested by otter trawl except during the open seasons of January 1 through July 31 and October 9 through December 31 or as modified by the Commissioner pursuant to (n) below. No dealer shall accept any weakfish landed in New Jersey taken by otter trawl except during such open seasons or as modified by the Commissioner pursuant to (n) below.

(k) Special provisions applicable to a directed winter flounder fishery are as follows:

1. The possession of more than 100 pounds of winter flounder on board a vessel or landed from a vessel shall constitute a directed fishery for winter flounder.

2. A person shall not possess any winter flounder less than 12 inches in length that have been harvested by otter or beam trawl ***, or any other net, trap, dredge or commercial gear with the exception of fyke nets***.

3. A person utilizing an otter or beam trawl in a directed fishery for winter flounder shall not use a net of less than 5.0 inches stretched mesh inside measurement applied throughout the cod end for at least 75 continuous meshes forward of the terminus of the net.

4. No person shall land any winter flounder taken by otter trawl or by any other net, trap, dredge or commercial gear, except during the open season of February 1 through May *[14]* ***31*** or as modified by the Commissioner pursuant to (n) below. No dealer shall accept any winter flounder landed in New Jersey except during such open season or as modified by the Commissioner pursuant to (n) below. The harvest of winter flounder by the use of fyke nets is subject to the provisions of N.J.A.C. 7:25-18.5(g)2.

(l) Special provisions concerning the harvest of bluefish are as follows:

1. The annual bluefish allocation to the otter trawl fishery shall be 14.7 percent of New Jersey's annual commercial bluefish quota as allocated by the National Marine Fisheries Service.

2. A person shall not land any bluefish taken by otter trawl except during the open seasons of January 1 through July 31 and October 1 through December 4 or as modified by the Commissioner pursuant to (n) below.

(m) For the purpose of this section, "land" shall mean to begin offloading fish, to offload fish or to enter port with fish.

(n) The Commissioner, with the approval of the New Jersey Marine Fisheries Council, may modify quotas, mesh sizes, minimum size limits and seasons specified in this section by notice in order to maintain compliance with any fishery management plan approved by the Atlantic States Marine Fisheries Commission pursuant to 16 U.S.C. §5104(b). The Department shall publish notice of any such modification in the Division's commercial regulation publication and the New Jersey Register.

7:25-18.15 Atlantic sturgeon management

(a) An individual shall not take or attempt to take, possess or land any Atlantic sturgeon in the State, without a valid Atlantic Sturgeon Commercial Gill Net Permit or a valid Atlantic Sturgeon By-Catch Permit issued by the Department. No holder of either permit shall land an Atlantic sturgeon unless such sturgeon has a valid, properly affixed possession tag as specified at (g) and (h) below. No person shall possess any Atlantic sturgeon that does not have a valid, properly affixed possession tag. "Land" shall mean to begin offloading fish, to offload fish or to enter port with fish.

(b) An Atlantic Sturgeon Commercial Gill Net Permit may be transferred to another individual eligible for a gill net license for the purpose of taking Atlantic sturgeon with gill nets. The permittee shall request approval to transfer the permit in writing to the Department, and no such transfer shall be valid until the transferee has received a valid permit issued in his or her name from the Department. An Atlantic sturgeon commercial gill net possession tag may be transferred to another Atlantic Sturgeon Commercial Gill Net Permit holder. The permittees shall list on the permittee's annual report pursuant to (l) below the name of the permittee or permittees to whom the permittee transferred any possession tag. The recipient of the transferred possession tag or tags shall list in the annual report pursuant to (l) below each such transferred tag received.

(c) (No change.)

(d) The application period closes April 2, 1993. Therefore, the Commissioner will determine an annual quota of Atlantic sturgeon (in pounds dressed) that may be harvested for each qualified applicant based upon the following:

1. The total allocation for the directed Atlantic sturgeon gill net fishery in 1993 shall equal the 1990 documented dressed weight landings provided by applicants on their applications, to be divided in the following way:

i.-ii. (No change.)

(e) (No change.)

(f) An Atlantic Sturgeon By-Catch Permit and a harvest quota will be issued to each qualifying applicant who provides documentation of Atlantic sturgeon landed in New Jersey by otter trawl or pound net of at least 1,000 pounds dressed weight during any one of the years 1988, 1989, or 1990. The Atlantic Sturgeon By-Catch shall not exceed 5.8 percent of the State allocation for Atlantic sturgeon. This represents the percentage of Atlantic sturgeon landed in New Jersey by otter trawl and pound net in 1990 as reported by the National Marine Fisheries Service. To qualify for an Atlantic Sturgeon By-Catch Permit, an applicant shall comply with (f)1 through 4 below *[within 45 days of the effective date of this subsection]* ***by March 23, 1995***:

1. The applicant shall complete an application, provided by the Department, listing the dressed weight of Atlantic sturgeon he or she landed by otter trawl or pound net during any one of the years 1988, 1989, or 1990, whichever year the applicant landed the greatest dressed weight.

2. The applicant shall attach documented proof of the dressed weight of Atlantic sturgeon harvested by otter trawl or pound net during any one of the years 1988, 1989, or 1990, whichever year the applicant landed the greatest dressed weight. Such proof shall consist of one or more of the following:

i. Weigh-out slips totaling the dressed weight harvested;

You're viewing an archived copy from the New Jersey State Library.

ii. A notarized statement from the applicant and the purchaser(s) attesting to the dressed weight harvested (records must be verifiable based upon inspection of the purchaser's business records);

iii. Other documentation similar to that specified in (f)2ii above may be accepted at the discretion of the Department.

3. The application period closes *[45 days following the effective date of this subsection]* ***March 23, 1995***.

4. *[Within 75 days following the effective date of this subsection]* ***By April 22, 1995***, each qualified applicant will receive an "Atlantic Sturgeon By-Catch Permit" which shall indicate that permittee's annual (calendar year) harvest quota of Atlantic sturgeon that may be landed.

(g) The Department will issue serially numbered Atlantic sturgeon possession tags to each Atlantic sturgeon commercial gill net and by-catch permittee based upon the permittee's annual harvest quota percentage established pursuant to (d) and (f) above and an equivalent average weight per fish landed as determined through average weighout landing verifications. No person shall reuse or alter any tag, or use a broken tag. All unused tags must be returned to the Department by January 15 of the following year. Tags will be issued for each calendar year by February 15.

(h) An Atlantic sturgeon commercial gill net or Atlantic sturgeon by-catch permittee who takes and possesses an Atlantic sturgeon of legal size shall tag such sturgeon with a numbered tag issued by the Department. Such tag shall be attached and securely locked at the *[throat]* ***nape*** of the fish once such fish has been dressed and prior to tending another piece of gear. All Atlantic sturgeon not tagged or of less than the legal minimum size shall be returned uninjured to the water immediately.

(i) The possession of Atlantic sturgeon of a length less than 60 inches or a dressed length less than 36 inches is prohibited. Dressed length is the length of an Atlantic sturgeon after the ***entire*** head, collar, tail and viscera have been removed.

(j) All Atlantic Sturgeon Commercial Gill Net and Atlantic Sturgeon By-Catch Permit holders shall have their permit on their person at all times when engaged in any phase of harvesting, transporting, selling or possessing Atlantic sturgeon.

(k) All Atlantic sturgeon harvested under the Atlantic Sturgeon Commercial Gill Net Permit **or Atlantic Sturgeon By-Catch Permit** shall be landed in New Jersey.

(l) All permittees shall be required to complete annual reports on forms supplied by the Department. The annual report shall be signed by the permittee attesting to the validity of the information and be submitted so it is received by the Department no later than Janury 15 of the next subsequent calendar year at the following address:

Division of Fish, Game and Wildlife
Atlantic Sturgeon Program
P.O. Box 418
Port Republic, NJ 08241

1. The annual report shall include:

i. The daily harvest and sale of Atlantic sturgeon (in pounds dressed) and possession tag number for each fish landed;

ii. The buyer(s) name;

iii. Name(s) and address(es) of the permit holder(s) who landed an Atlantic sturgeon that was tagged with the permittee's transferred possession tag;

iv. The cumulative total of Atlantic sturgeon (in pounds dressed) landed at the end of the year;

v.-vi. (No change.)

(m) Adjustments in individual allocation for any calendar year subsequent to 1993 may be made annually by the Department, based upon recommendations of the Atlantic States Marine Fisheries Commission, annual commercial landings data from the National Marine Fisheries Service and an individual's historical harvest performance. If no such adjustment is made, each permittee's quota shall remain at the previous year's amount.

(n) (No change in text.)

(o) Any person or permittee violating the provisions of this section shall be subject to the penalties prescribed in N.J.S.A. 23:2B-14 in addition to the following:

1.-2. (No change.)

3. Failure to comply with the provisions of (a), (h), or (l) above shall subject the violator to suspension or revocation of the Atlantic Sturgeon Commercial Gill Net Permit or the Atlantic Sturgeon By-Catch Permit.

4. (No change.)

(a)

ENFORCEMENT

Notice of Administrative Correction
Air Administrative Procedures and Penalties
N.J.A.C. 7:27A

Take notice that the Department of Environmental Protection has discovered an error in the notice of readoption with amendments of N.J.A.C. 7:27A published in the January 3, 1995 New Jersey Register at 27 N.J.R. 93(a). The listing of "November 2, 1994" as the effective date of the readoption of N.J.A.C. 7:27A was a typographic error. As required under N.J.A.C. 1:30-4.4(e), and as reflected in the original adoption document (R.1995 d.5), the readoption effective date is the date of filing of the notice, December 2, 1994.

(b)

DIVISION OF ENVIRONMENTAL SAFETY, HEALTH AND ANALYTICAL PROGRAMS

Notice of Administrative Correction
Fees for the Registration of Nonionizing Radiation Producing Sources
Annual Renewal Fee for Microwave Heaters, Sealers and Industrial Ovens, per Location—Seven Sources
N.J.A.C. 7:28-48.7

Take notice that the Department of Environmental Protection has discovered an error in the adopted text of N.J.A.C. 7:28-48.7(b)2 as published in the January 3, 1995 New Jersey Register at 27 N.J.R. 99(a). The published renewal fee of $615.00 for microwave heaters, sealers and industrial ovens, per location, for seven sources is a typographic error. As set forth in the original adoption document (R.1995 d.6), the correct fee is $725.00. This notice of administrative correction is published in accordance with N.J.A.C. 1:30-2.7.

Full text of the corrected rule follows (addition indicated in boldface **thus**; deletion indicated in brackets [thus]):

7:28-48.7 Initial registration fee and annual renewal fee for nonionizing radiation producing sources

(a) (No change.)

(b) An owner shall pay the fees for initial registration and annual renewal as follows:

Source Category	Initial Registration Fee	Annual Registration Fee
1. (No change.)		
2. Microwave heaters, sealers and industrial ovens, per location		
...		
Seven sources	705.00	[615.00]**725.00**
...		

(c)-(g) (No change.)

You're viewing an archived copy from the New Jersey State Library.

HUMAN SERVICES

(a)

OFFICE OF EDUCATION
Instructional Staff; Tenure
Readoption with Amendments: N.J.A.C. 10:11

Proposed: November 7, 1994 at 26 N.J.R. 4297(a).
Adopted: January 13, 1995 by William Waldman, Commissioner, Department of Human Services.
Filed: January 13, 1995 as R.1995 d.86, **without change.**
Authority: N.J.S.A. 30:1-12; 18A:1-1; 18A:60-1 and 18A:60-1.1 et seq. (P.L. 1986, c.158).
Effective Date: January 13, 1995, Readoption;
February 6, 1995, Amendments.
Expiration Date: January 13, 2000.

Summary of Public Comments and Agency Responses:
No comments received.

Executive Order No. 27 Statement

These rules are not subject to any Federal standards or requirements and a Federal exceedance analysis is not required for this rulemaking.

Full text of the readoption can be found in the New Jersey Administrative Code at N.J.A.C. 10:11.

Full text of the adopted amendments follows:

10:11-1.5 Eligibility
(a)-(b) (No change.)
(c) Employment experience obtained under emergency or provisional certification may be applied towards tenure eligibility. However, tenure may be acquired only when standard certification is issued. Instructional staff shall obtain a standard certificate within three years from the date an emergency certificate is issued. Requests for an extension of time shall be presented in writing to the Director, Office of Education. Extensions of time to obtain a standard certificate shall be granted by the Director, Office of Education, based upon a demonstration of extraordinary circumstances which prevented the requestor from completing the necessary course work within the time allotted.

10:11-1.7 Performance assessment for tenure purposes
(a) Educationally certified supervisory personnel or the Director, Office of Education, as appropriate, shall conduct performance assessment reviews in compliance with the standards and criteria promulgated by the Commissioner of the Department of Personnel pursuant to N.J.S.A. 11A:6-28 and N.J.A.C. 4A:1-1, and set forth fully at N.J.A.C. 6:3-4.1 and 4.3.
(b)-(c) (No change.)
(d) For purposes of evaluation of non-tenured instructional staff, the following provisions shall apply notwithstanding the schedule of evaluations set forth in N.J.A.C. 6:3-4.1.
1. (No change.)
(e) For purposes of evaluation of tenured instructional staff, the following provisions shall apply notwithstanding the schedule of evaluations set forth in N.J.A.C. 6:3-4.3.
1. (No change.)
(f)-(h) (No change.)

10:11-1.9 Reduction in force
Nothing contained in N.J.S.A. 18A shall be held to limit the right of the Commissioner of Human Services in the case of any State institution conducted under his or her jurisdiction, supervision or control, to reduce the number of instructional staff in any such institution or institutions when the reduction is due to natural diminution of the number of students or pupils in the institution or institutions, subject to N.J.A.C. 6:3-5.1.

(b)

DIVISION OF DEVELOPMENTAL DISABILITIES
Notice of Administrative Correction
Placement Appeals
N.J.A.C. 10:46B-5.1

Take notice that the Division of Developmental Disabilities has discovered an error in the adopted text of N.J.A.C. 10:46B-5.1(d) as published in the January 17, 1995 New Jersey Register at 27 N.J.R. 360(a). As stated in response to the third comment in the notice of adoption (from COSAC), the Division intended that N.J.A.C. 10:26B-5.1(d) be a repetition of the text currently found in N.J.A.C. 10:48-1.1(k). While the full text of N.J.A.C. 10:48-1.1(k) was repeated as N.J.A.C. 10:46B-5.1(d) in the filed notice of adoption (see R.1995 d.44), the last sentence of the subsection was erroneously omitted from the published notice, both in the response to the comment and in the rule. The omission from the rule text is corrected through this notice, published pursuant to N.J.A.C. 1:30-2.7.

Full text of the corrected rule follows (addition indicated in boldface **thus**):

10:46B-5.1 Placement appeals
(a)-(c) (No change.)
(d) Except in emergencies, a placement may be deferred pending the exhaustion of the administrative appeal if the appeal is received verbally or in writing 30 calendar days before the proposed placement and the appellant can demonstrate that there may be irreparable harm to the individual as the result of the placement. The Division Director shall decide whether or not to defer the placement. **If the Division Director agrees to defer the placement, the Division shall not be responsible to fund the placement except where the Division was funding the placement prior to the request to defer.**

(c)

DIVISION OF YOUTH AND FAMILY SERVICES
Manual of Requirements for Child Care centers
Adopted Amendments: N.J.A.C. 10:122-2.4, 2.5, 4.5, 4.8, 5.2, 9.1, 9.2, 9.3, 9.4 and 9.5

Proposed: October 17, 1994 at 26 N.J.R. 4139(a).
Adopted: January 13, 1995 by William Waldman, Commissioner, Department of Human Services.
Filed: January 13, 1995 as R.1995 d.87, **without change.**
Authority: N.J.S.A. 30:5B-1 to 15.
Effective Date: February 6, 1995.
Expiration Date: May 16, 1999.

Summary of Public Comments and Agency Responses:
No comments received.

Executive Order No. 27 Statement

These rules do not exceed any Federal standards or requirements and a Federal exceedance analysis is not required for this rulemaking.

Full text of the adoption follows:

10:122-2.4 Denying, suspending, revoking or refusing to renew a license or a Certificate of Life/Safety Approval
(a) The Bureau may deny an application or suspend, revoke or refuse to renew a license or a Certificate of Life/Safety Approval for good cause, including the following, as applicable:
1. (No change.)
2. Violation of the terms and conditions of a license or a Certificate of Life/Safety Approval;
3. Use of fraud or misrepresentation in obtaining a license or a Certificate of Life/Safety Approval or in the subsequent operation of the center;
4.-6. (No change.)

You're viewing an archived copy from the New Jersey State Library.

7. Failure to provide developmental activities that meet the physical, social, emotional and cognitive needs of the children served;

8. Failure by the sponsor to secure and maintain on file criminal conviction disclosures, as specified in N.J.A.C. 10:122-4.1(b) and (c); or

9. A determination by the Division's Institutional Abuse Investigation Unit that children in the center are at risk of harm.

(b) The Bureau shall provide written notice to the sponsor if it intends to deny an application or suspend, revoke or refuse to renew a license or a Certificate of Life/Safety Approval. The notice shall specify the Bureau's reasons for such action.

(c) If the Bureau suspends a center's license or Certificate of Life/Safety Approval to prevent the imminent risk of harm to children served by the center, the Bureau may reinstate the suspended license or Certificate of Life/Safety Approval upon the center's compliance with all applicable provisions of this manual.

(d) If the Bureau denies an application or revokes or refuses to renew a center's license or Certificate of Life/Safety Approval, as specified in (a) above, the center shall be prohibited from reapplying for a license or a Certificate of Life/Safety Approval for one year from the date of the denial, revocation or refusal to renew. After the one-year period has elapsed, the center may submit to the Bureau a new application for a license or a Certificate of Life/Safety Approval.

(e) Each license and each Certificate of Life/Safety Approval issued by the Bureau to a center is the property of the State of New Jersey. If the Bureau suspends or revokes a license or a Certificate of Life/Safety Approval, the center shall return the license or Certificate of Life/Safety Approval to the Bureau immediately.

10:122-2.5 Administrative hearings

(a) Before the Bureau's decision to deny an application or suspend, refuse to renew or revoke a center's license or Certificate of Life/Safety Approval becomes effective, the Bureau shall afford the center an opportunity to request an administrative hearing, pursuant to the Administrative Procedure Act, N.J.S.A. 52:14B-1 et seq., and the Uniform Administrative Procedure Rules, N.J.A.C. 1:1.

(b) (No change.)

10:122-4.5 Staff qualifications

(a)-(c) (No change.)

(d) For school-age child care programs, the following shall apply:

1. The program supervisor shall meet the qualification requirements specified in one of the applicable options set forth in the chart below for education, training and experience, based on the center's licensed capacity:

REQUIREMENTS FOR PROGRAM SUPERVISOR QUALIFICATIONS

(No change.)

. . .

Recodify existing 1.-4. as 2.-5. (No change in text.)

10:122-4.8 Special requirements to prevent child abuse and/or neglect

(a)-(f) (No change.)

(g) Substantiation of the child abuse and/or neglect allegation by the Division's IAIU shall not, in itself, automatically result in the termination of the accused sponsor, director or staff member(s) from his or her position in the center, or in the denial of the center's application or the suspension, revocation or non-renewal of the center's license or Certificate of Life/Safety Approval, but shall constitute grounds for such action if it is determined that the person's continued employment at the center would place the children at risk. Such determination shall be made by the Bureau after considering information provided by the sponsor, the affected staff member(s), the IAIU and law enforcement authorities, as applicable and available.

10:122-5.2 Physical plant requirements

(a)-(l) (No change.)

(m) Fire prevention requirements are as follows:

1.-2. (No change.)

3. The center shall maintain on file a record of each fire drill, as specified in the NJUFC, which record shall include:

i.-iv. (No change.)

4. (No change.)

(n)-(t) (No change.)

10:122-9.1 Scope

(a) (No change.)

(b) Each center, person or agency, as defined in (a) above, also shall comply with applicable provisions of New Jersey Division of Motor Vehicles (DMV) law, pursuant to N.J.S.A. 39:1-1 et seq., and the rules promulgated thereunder, as specified in N.J.A.C. 13.

10:122-9.2 Vehicle definitions

(a) A Type I School Bus means a bus with a capacity of 17 to 58 passengers, as indicated by the vehicle manufacturer, which has been painted in the color of uniform national school bus yellow, and is required by DMV to have New Jersey school vehicle Type I, "S1" designated license plates.

(b) A Type II School Bus means a bus with a capacity of 10 to 16 passengers, as indicated by the vehicle manufacturer, which has been painted in the color of uniform national school bus yellow if the bus was manufactured after April 1, 1977, and is required by DMV to have New Jersey school vehicle Type II, "S2" designated license plates.

(c) A Type II School Vehicle means a vehicle with a capacity of nine or fewer passengers, as indicated by the vehicle manufacturer, and a minimum of three side entry doors, which is required by DMV to have New Jersey school vehicle Type II, "S2" designated license plates.

10:122-9.3 Vehicle requirements

(a) The center shall ensure that each vehicle used to provide transportation of enrolled children to and from the center, as specified in N.J.A.C. 10:122-9.1(a), including Type I School Buses, Type II School Buses, Type II School Vehicles, and all other vehicles except private passenger vehicles, is equipped with the following:

1. Three triangular portable red reflector warning devices;

2. A fully charged fire extinguisher, with a gauge and with a minimum underwriters' rating of 2A 10BC, which shall be located at the front and securely mounted to the right of the driver in a way that does not constitute an obstruction or hazard to the passengers;

3. All-weather radial or snow tires from November 15 to April 1; and

4. A removable first-aid kit, which shall be located in an accessible place within the vehicle. A sign indicating its location shall be placed on the dashboard. The first-aid kit shall contain the following items:

i. Two single units, one inch by 2½ yards adhesive tape;

ii. Two single units, sterile gauze pads, three inch by three inch (12 per unit);

iii. One single unit, ¾ inch by three inch adhesive bandage (100 per unit);

iv. One single unit, two inch bandage compress (12 per unit);

v. One single unit, three inch bandage compress (12 per unit);

vi. Two single units, two inch by six yards sterile gauze roller bandage;

vii. Two single units, nonsterile triangular bandage, approximately 40 inch by 36 inch by 54 inch with two safety pins;

viii. Three single units, sterile gauze, 36 inch by 36 inch (U.S.P. 2428 count);

ix. Three single units, sterile eye pad (one per unit);

x. One pair of scissors;

xi. A pad and sharpened pencil;

xii. One mouth to mouth airway; and

xiii. One pair of latex gloves.

(b) The center shall ensure that each Type I School Bus:

1. Is equipped with school vehicle Type I, "S1" designated license plates and a valid School Bus inspection sticker issued by DMV; and

2. Meets the specifications for Type I School Buses prescribed by New Jersey Department of Education rules, as specified in

You're viewing an archived copy from the New Jersey State Library.

N.J.A.C. 6:21-5, that were applicable at the time the bus was manufactured.

(c) The center shall ensure that each Type II School Bus:

1. Has school vehicle Type II, "S2" designated license plates and a valid School Bus inspection sticker issued by DMV; and

2. Meets the specifications prescribed by either:

i. The New Jersey Department of Human Services rules that were applicable at the time the bus was manufactured, for buses manufactured prior to April 1, 1977; or

ii. The New Jersey Department of Education rules, as specified in N.J.A.C. 6:21-5, for buses manufactured after April 1, 1977.

(d) The center shall ensure that each Type II School Vehicle:

1. Has school vehicle Type II, "S2" designated license plates and a valid School Bus inspection sticker issued by DMV;

2. Has a maximum seating capacity that does not exceed the number of seat belts installed;

3. Has a minimum seat width allowance of 12 inches per child;

4. Has seats and back rests securely fastened and facing forward;

5. Allows exiting from any seat in the vehicle with minimum unobstructed clearance of 10 inches;

6. Has no seat that requires the folding of any seat ahead of it in order to permit exiting. Seats that are not facing forward or that require the folding of any seat ahead of them in order to permit exiting shall be removed or bolted down;

7. Has seats upholstered with springs or foam rubber;

8. Has padding around exposed metal bars in the vehicle to prevent child impact; and

9. Has an operable heater capable of maintaining a temperature of 50 degrees Fahrenheit.

(e) Any center may authorize staff members and/or parents of enrolled children to utilize their own private passenger vehicles to transport children from the center to and from scheduled center field trips, outings or special events (such as visits to the zoo, library, or museum) or to transport children from the center to a hospital, clinic or office for medical treatment, pursuant to N.J.S.A. 18A:39-20.1. However, staff members and/or parents may be authorized to do so only if:

1. The vehicle has a capacity of eight or fewer persons;

2. The driver possesses a valid Basic automobile driver's license issued by DMV, or a valid automobile driver's license issued by an approved out-of-State motor vehicle agency for the state in which the driver is a legal resident;

3. The vehicle has a valid motor vehicle inspection sticker issued by DMV or by an approved out-of-State motor vehicle agency for the state in which the vehicle is legally registered;

4. The vehicle owner possesses vehicle liability insurance at least at the minimum amounts required by New Jersey State insurance law, pursuant to N.J.S.A. 17:28-1.1a, or at least at the minimum amounts required by a state other than New Jersey in which the vehicle is legally registered;

5. The center maintains transportation records on each vehicle, as specified in N.J.A.C. 10:122-9.7(b); and

6. The center ensures that the driver and/or additional adults apply the safety practices, as specified in N.J.A.C. 10:122-9.5(a) through (d) and (g) through (n).

(f) For early childhod programs, the following shall apply:

1. The center shall use a Type I School Bus, Type II School Bus, or Type II School Vehicle at all times when transporting children, except when permitted to use a private passenger vehicle, as specified in (e) above, or a chartered autobus, as specified in (f)2 below.

2. Any center may use an autobus under the jurisdiction of the Department of Transportation when chartered for scheduled center field trips, outings or special events, provided that the driver and/or additional adults apply the safety practices, as specified in N.J.A.C. 10:122-9.5(a) through (e), (h), and (j) through (m).

(g) For school-age child care programs, the following shall apply:

1. Any center may use a vehicle other than a Type I School Bus, Type II School Bus, or Type II School Vehicle when transporting children, provided that the vehicle:

i. Has a valid motor vehicle inspection sticker issued by DMV;

ii. Transports no more children than the manufacturer's capacity specifications indicate and the maximum number of seat belts installed;

iii. Has seats and back rests securely fastened;

iv. Has padding around exposed metal bars in the vehicle to prevent child impact; and

Has an operable heater.

10:122-9.4 Driver licensing requirements

(a) (No change.)

(b) For early childhood programs, the following shall apply:

1. If a center uses a Type II School Vehicle, the center shall:

i. (No change.)

ii. Ensure that each driver of such a vehicle possesses a valid CDL in at least Class C with a passenger endorsement, or an out-of-State equivalent license, as approved by the DMV.

(c) (No change.)

10:122-9.5 Vehicle-related safety practices

(a)-(m) (No change.)

(n) For school-age child care programs, the following shall apply:

1. When children are being transported in a vehicle other than a Type I School Bus or Type II School Bus, the center shall comply with one of the following options:

i. The center shall ensure that each child discharged from the vehicle is received by his or her parent or person designated by the child's parent;

ii. The center shall ensure that each child is boarded onto or discharged from the vehicle on the same side of the roadway as the child's home or other destination or point of origin; or

iii. The center shall have one adult on the vehicle in addition to the driver who accompanies each child when crossing a roadway upon boarding or when being discharged from the vehicle.

LABOR

(a)

DIVISION OF UNEMPLOYMENT INSURANCE AND DISABILITY INSURANCE FINANCING

Contributions, Records and Reports; Services Excluded from Coverage by the Unemployment Compensation Law

Adopted New Rules: N.J.A.C. 12:16-23

Proposed: December 5, 1994 at 26 N.J.R. 4730(a).

Adopted: January 13, 1995 by Peter J. Calderone, Commissioner, Department of Labor.

Filed: January 13, 1995 as R.1995 d.84, **with substantive and technical changes** not requiring additional public notice or comment, (see N.J.A.C. 1:30-4.3).

Authority: N.J.S.A. 43:21-1 et seq.

Effective Date: February 6, 1995.

Expiration Date: March 23, 1995.

Summary of Hearing Officer's Recommendations and Agency Responses:

A public hearing on the proposed new rules was held on December 28, 1994, at the Department of Labor, John Fitch Plaza, Trenton, New Jersey. Deirdre L. Webster, Regulatory Officer, presided at the hearing and received testimony. She responded to certain statements made during the course of testimony and recommended that the proposed new rules be adopted with changes not in violation of N.J.A.C. 1:30-4.3.

Persons wishing to review the transcript of the hearing may contact Deirdre L. Webster, Regulatory Officer, Regulatory Services, Office of the Commissioner, CN 110, Trenton, NJ 08625-0110.

Summary of Public Comments and Agency Responses:

It is first recognized that the members of the Employment Security Council support the adoption of the new rules as proposed. Written and

You're viewing an archived copy from the New Jersey State Library.

oral comments were received from Larry Day and Thaddeus Raczkowski of the New Jersey Motor Truck Association.

COMMENT: While N.J.A.C. 12:16-23.1 addresses State vs. Federal exemptions, the opposite (Federal vs. State) is not addressed. Both State vs. Federal exemptions and Federal vs. State exemptions must be addressed at the same time. If an individual is exempt for Federal purposes, they must also be exempt for State purposes, whether or not an exemption is listed in the Unemployment Compensation Law. Accordingly, N.J.A.C. 12:16-23.1(b) should be amended to read: "Services are exempt if there is a corresponding exemption under the Federal Unemployment Tax Act (FUTA) or the services are otherwise not subject to tax or coverage under "FUTA".

RESPONSE: The issue of Federal vs. State exemptions must be addressed through the State legislative process and not the rulemaking process. The Department notes a typographical error in N.J.A.C. 12:16-23.1(b). Specifically, this rule should be amended to read "However, these services are exempt only if there is a corresponding exemption under the Federal Unemployment Tax Act ("FUTA") . . .".

COMMENT: The term "recent" should be eliminated from N.J.A.C. 12:16-23.2(a)2. According to recent tax articles, less than one in 10 businesses will be audited by the Internal Revenue Service (IRS) this year. Therefore, it can be concluded that firms are only audited on an average of once every 10 years. As a result, it would be unreasonable to exclude an audit which, for example, took place five years ago because it was not defined as "recent."

RESPONSE: The Department recognizes the need to clarify the meaning of "recent" referenced in N.J.A.C. 12:16-23.2(a)2. Accordingly, it is modifying the proposed rule to accept an employment tax audit conducted by the IRS after 1987 as evidence that services are not covered under FUTA. The Department would not want to accept any audits conducted by the IRS prior to the adoption of Revenue Rule 87-41.

COMMENT: In addition to audits, the IRS conducts employment compliance checks which are specifically designed to focus on the proper classification of individuals. Tax audits will result in either a tax assessment or a no change notification. Employment compliance checks result in either an examination or no further action and/or notification. Therefore, it is recommended that N.J.A.C. 12:16-23.2 be amended to include an employment compliance check conducted by the IRS as evidence that services are not covered under FUTA.

RESPONSE: The recommendation to add employment compliance checks to N.J.A.C. 12:16-23.2(a)2 cannot be accepted by the Department. The IRS has advised that compliance checks conducted for employment tax purposes are made to ensure that employers are filing employment tax related forms such as Form 941 and Form 1099 in a timely and proper manner. Revenue officers conducting such checks do not examine books or records and do not issue a determination. Accordingly, the addition of employment compliance checks would serve no useful purpose.

COMMENT: N.J.A.C. 12:16-23.2(a)2 should be amended to eliminate the phrase ". . . however, the determination must not have been the result of the application of Section 530 of the Revenue Act of 1978." This phrase must be eliminated if the Department's goal is to truly establish comformity with FUTA and to support the Governor's "Business Friendly" policy. Congress included Section 530 in the Revenue Act of 1978 because it determined that the IRS was incapable of properly determining employment status with the tools at hand. Section 530 ensures reasonable and fair treatment of taxpayers. If it is not included in N.J.A.C. 12:16-23.2(a)2 as an acceptable determination factor or if individuals presently determined to be exempt under Federal regulations are excluded under N.J.A.C. 12:16-23.1, it will create the exact set of circumstances which the Department is trying to eliminate through adoption of the proposed new rule. As a result of the proposed new rule, some firms will be exempt Federally but will not be exempt under the State's statute.

RESPONSE: Based on advice of the IRS, the Department cannot accept an IRS determination where there is not an assessment of employment taxes for service as a result of the application of Section 530 of the Revenue Act of 1978. Although an employer is granted Section 530 relief from payment of Federal employment taxes, the worker is still an employee and liable for the employee's share of FICA. The worker is not converted to an independent contractor because of Section 530 relief and remains an employee for other sections of the Federal Tax Code, such as pension regulations and applicable State laws. The IRS has explained that Section 530 offers termination of certain employment tax liabilities, for a particular employer of a specific category of employees under certain circumstances defined within the individual IRS audit, not an exemption from FUTA. In addition, the State's Attorney General has advised that if services meet the Federal definition of employment, and are not otherwise excluded by the specific exemption of 26 U.S.C. 3306, then the services should be considered employment under the Unemployment Compensation Law, notwithstanding the specific listing of the services in N.J.S.A. 43:21-19(i)(7). As a result, the Department should collect taxes based on the remuneration paid for these services and approve, when appropriate, unemployment claims from persons performing these services.

COMMENT: The proposed rule at N.J.A.C. 12:16-23.2(b) would enable the Department to unilaterally render a determination contrary to that of the IRS. This would include those cases where an IRS audit determines, for whatever reason, that employment taxes are not applicable. Unless the Department sets forth very clear guidelines as to how they are to determine what the exact prior relationship was and how it has changed, this provision should be eliminated. The burden of proof must lie with the State in this case and N.J.A.C. 12:16-23.2(b) should not apply. In place of the proposed language in N.J.A.C. 12:16-23.2(b), language which would provide that any change in the Federal status would be immediately reflected in that application of State law is recommended.

RESPONSE: The Department has no intention of overruling a determination rendered by the IRS. Rather, this provision was included to provide the Department with flexibility in the event there has been a change in circumstances following an IRS determination. The Department's authority to examine the circumstances surrounding the employer-worker relationship is inherent in the Unemployment Compensation Law and its implementing regulations.

COMMENT: The Department needs to be afforded the opportunity to review those firms which may be incorrectly classifying their workers as independent contractors. The only way the Department can determine whether workers are classified as independent contractors or employees is through routine audits, IRS tax change referrals, complaints or actual unemployment claims which reveal no tax has been paid. It is proposed that 1099 Miscellaneous tax forms be required to be filed on all unincorporated independent contractors, similar to Federal regulations.

RESPONSE: The Department is reluctant to accept a proposal which would impose additional reporting requirements on employers. It is noted that employers are required to maintain 1099 Miscellaneous Forms in accordance with IRS regulations and that such forms must be supplied to the State during the audit process.

Executive Order No. 27 Statement

The proposed new rules do not exceed standards or requirements imposed by Federal law. The exclusion provided for under these rules apply only where a corresponding exclusion exists under the Federal Unemployment Tax Act, 26 U.S.C. 3301 et seq.

Full text of the adoption follows (additions to proposal indicated in boldface with asterisks ***thus***; deletions from proposal indicated in brackets with asterisks *[thus]*):

SUBCHAPTER 23. SERVICES EXCLUDED FROM COVERAGE BY THE UNEMPLOYMENT COMPENSATION LAW

12:16-23.1 Exempt services

(a) Persons who perform services and receive remuneration are employees under the Unemployment Compensation Law unless the services meet the Unemployment Compensation Law definition of independence set forth in N.J.S.A. 43:21-19(i)(6).

(b) The Unemployment Compensation Law lists certain categories of services as being exempt from Unemployment Compensation coverage. However, these services are *[only]* exempt ***only*** if there is a corresponding exemption under the Federal Unemployment Tax Act ("FUTA") or the services are otherwise not subject to tax or coverage under FUTA.

1. If an employing unit pays remuneration for services not specifically listed as exempt under the provisions of FUTA and seeks an exemption under this section, the employing unit has the burden of proof to show that the services are either exempt under FUTA or otherwise not subject to the tax imposed by FUTA.

2. The Division of Unemployment Insurance/Disability Insurance Financing will hold such class of individuals or type of service in covered employment pending receipt of proof of exemption under N.J.A.C. 12:16-23.2 below and determination of exemption.

You're viewing an archived copy from the New Jersey State Library.

12:16-23.2 Evidence of FUTA Exemption

(a) Evidence that services are not covered under FUTA may include among other things:

1. Private letter ruling(s) from the Internal Revenue Service;

2. *[A recent]* ***An*** employment tax audit conducted by the Internal Revenue Service ***after 1987*** which determined that there was to be no assessment of employment taxes for the services in question; however, the determination must not have been the result of the application of Section 530 of the Revenue Act of 1978;

3. Determination letter(s) from the Internal Revenue Service; and/or

4. Documentation of responses to the 20 tests required by the Internal Revenue Service to meet its criteria for independence. These tests are enumerated in IRS Revenue Rule 87-41.

(b) The Division reserves the right to examine the circumstances surrounding the relationship between the parties to determine if the conditions of the relationship with the employer have changed.

PUBLIC UTILITIES

(a)

BOARD OF PUBLIC UTILITIES DIVISION OF ENERGY PLANNING AND CONSERVATION

Grants and Loans Programs

Readoption with Amendments and Recodification: N.J.A.C. 14A:6 as N.J.A.C. 14:31

Proposed: November 21, 1994 at 26 N.J.R. 4482(c).

Adopted: January 11, 1995 by the Board of Public Utilities, Herbert H. Tate, President, Carmen J. Armenti and Dr. Edward H. Salmon, Commissioners.

Filed: January 12, 1995 as R.1995 d.68, **without change**.

Authority: N.J.S.A. 52:27F-11q.

BPU Docket Number: AX94090406Y.

Effective Date: January 12, 1995, Readoption;
February 6, 1995, Amendments and Recodification.

Expiration Date: January 12, 2000.

Summary of Public Comments and Agency Responses:
No comments received.

Executive Order No. 27 Statement

An Executive Order No. 27 analysis is not required because there are no Federal requirements or standards related to or associated with the provisions contained in the readoption with amendments.

Full text of the readoption can be found in the New Jersey Administrative Code at N.J.A.C. 14A:6.

Full text of the adopted amendments follows:

Recodify existing 14A:6-2 as 14:31-1 (No change in text at N.J.A.C. 14A:6-2.1, 2.3, 2.5 through 2.11, 2.13 through 2.18)

14:31-1.2 Definitions

The following words and terms, when used in this chapter, shall have the following meanings, unless the context clearly indicates otherwise.

...

"Eligible loan" means a loan made by a lender to the applicant for energy conservation renovations or an alternative energy production facility which meets the requirements of N.J.A.C. 14:31-1.6 and 1.7.

"Energy audit" means a study of a building(s) or facilities conducted by an engineer or an architect/engineering firm or other Division approved party to determine operating and maintenance procedures and renovations which would result in reduced energy consumption. The energy audit shall provide the estimated costs of implementation and the expected dollar and energy savings for the recommended project and maintenance procedures. The energy audit shall include, but not be limited to, the energy conserving renovations listed in N.J.A.C. 7:32-1.12.

"Energy conservation renovation" means any equipment, materials, alterations or improvements installed within an existing structure owned or leased by an eligible applicant that would reduce energy consumption or increase energy efficiency, and which have been approved by the Division pursuant to N.J.A.C. 14:31-1.11, but shall not include new construction or energy conservation renovations installed prior to receipt of a completed Business Energy Improvement Program application by the Division.

"Energy conserving construction" means materials, practices or equipment that exceeds the energy efficiency of those required under the Energy Subcode, N.J.A.C. 5:23-3.18 as amended.

...

"Incremental grant" means full payment for the incremental cost of using materials, practices and equipment that exceed those materials, practices and equipment required under the Energy Subcode, N.J.A.C. 5:23-3.18 as amended.

...

14:31-1.4 Requests for applications

The Division shall make available Business Energy Improvement Program applications on request, until the Program is suspended pursuant to N.J.A.C. 14:31-1.3. Application requests may be addressed to the Secretary, Board of Public Utilities, Two Gateway Center, Newark, N.J. 07102.

14:31-1.12 Application and review procedures

(a) Applicants shall submit to the Division a completed Business Energy Improvement Program application. The application shall bear either a legible (non-metered) postmark or a date stamp from the Division's Office of Operations indicating that the application was submitted on or before any deadline estalished pursuant to N.J.A.C. 14:31-1.3.

(b) The Division shall conduct a review of the applications, commencing with the application bearing the earliest submission date. The Division may require the submission of additional information to complete the application or may require the resubmission of the entire application, if incomplete. The Division shall review the applications to determine whether:

1.-3. (No change.)

4. The application is complete as to the submission requirements of N.J.A.C. 14:31-1.5;

5.-6. (No change.)

7. For energy conserving construction, evidence that capital expenditures are sufficient to cover the construction cost estimate provided under N.J.A.C. 14:31-1.5(a)3.

(c) (No change.)

(b)

BOARD OF PUBLIC UTILITIES DIVISION OF ENERGY PLANNING AND CONSERVATION

Energy Facility Review Board

Readoption with Amendments and Recodification: N.J.A.C. 14A:8 as N.J.A.C. 14:33

Proposed: November 21, 1994 at 26 N.J.R. 4484(a).

Adopted: January 11, 1995 by the Board of Public Utilities, Herbert H. Tate, President, Carmen J. Armenti and Dr. Edward H. Salmon, Commissioners.

Filed: January 12, 1995 as R.1995 d.69, **without change**.

Authority: N.J.S.A. 52:27F-11(g), 52:27F-15(c) and 48:2-12.

BPU Docket Number: AX94090407Y.

Effective Date: January 12, 1995, Readoption;
February 6, 1995, Amendments and Recodification.

Expiration Date: January 12, 2000.

You're viewing an archived copy from the New Jersey State Library.

Summary of Public Comments and Agency Responses:
No comments received.

Executive Order No. 27 Statement

An Executive Order No. 27 analysis is not required because there are no Federal requirements or standards related to or associated with the provisions contained in the readoption with amendments.

Full text of the readoption can be found in the New Jersey Administrative Code at N.J.A.C. 14A:8.

Full text of the adopted amendments follows:

Recodify existing N.J.A.C. 14A:8 as 14:33 (No change in text at N.J.A.C. 14A:8-1.1 through 1.5, 1.7 through 1.11)

14:33-1.6 Correspondence with the Board
All correspondence with the Board shall be addressed to:
Secretary
Board of Public Utilities
Two Gateway Center
Newark, N.J. 07102

(a)

BOARD OF PUBLIC UTILITIES
DIVISION OF ENERGY PLANNING AND CONSERVATION

Periodic Reporting by Energy Industries of Energy Information

Readoption with Amendments and Recodification: N.J.A.C. 14A:11 as N.J.A.C. 14:34

Proposed: November 21, 1994 at 26 N.J.R. 4484(b).
Adopted: January 11, 1995 by the Board of Public Utilities, Herbert H. Tate, President, Carmen J. Armenti and Dr. Edward H. Salmon, Commissioners.
Filed: January 12, 1995 as R.1995 d.70, **without change**.
Authority: N.J.S.A. 52:27-11(g), 52:27-18 and 48:2-12.
BPU Docket Number: AX94090408Y.
Effective Date: January 12, 1995, Readoption;
February 6, 1995, Amendments and Recodification.
Expiration Date: January 12, 2000.

Summary of Public Comments and Agency Responses:
No comments received.

Executive Order No. 27 Statement

An Executive Order No. 27 analysis is not required because there are no Federal requirements or standards related to or associated with the provisions contained in the readoption with amendments.

Full text of the readoption can be found in the New Jersey Administrative Code at N.J.A.C. 14A:11.

Full text of the adopted amendments follows:

Recodify existing 14A:11-3, 4 and 5 as 14:34-1, 2 and 3 (No change in text at N.J.A.C. 14A:11-3.1, 3.2, 4 and 5)

4:34-1.3 Reporting
(a) (No change.)
(b) The tabulation of bulk terminal stocks shall be in the form of EIA-811, Bulk Terminal Stocks of Finished Petroleum Products. This information should be sent to:
Secretary
Board of Public Utilities
Two Gateway Center
Newark, N.J. 07102

TRANSPORTATION

(b)

DIVISION OF TRAFFIC ENGINEERING AND LOCAL AID
BUREAU OF LOCAL HIGHWAY DESIGN

New Jersey Transportation Trust Fund Authority Act Federal Aid Urban System Substitution Program: County and Municipal Aid

Readoption: N.J.A.C. 16:20A

Proposed: November 21, 1994 at 26 N.J.R. 4485(a).
Adopted: December 23, 1994 by W. Dennis Keck, Acting Assistant Commissioner for Planning.
Filed: January 12, 1995 as R.1995 d.71, **without change**.
Authority: N.J.S.A. 27:1A-5, 27:1A-6, 27:7-13, 27:7-47, 27:7-13.1 et seq. and the New Jersey Transportation Trust Fund Authority Act, N.J.S.A. 27:1B-1 et seq.
Effective Date: January 12, 1995.
Expiration Date: January 12, 1998.

Summary of Public Comments and Agency Responses:
No comments received.

The Department of Transportation intends to readopt this rule for three years, instead of the usual five year period. The Department is in the process of closing out these accounts and plans for this process to be completed within three years.

Executive Order No. 27 Statement

An Executive Order No. 27 analysis is not required because the requirements of this rulemaking are dictated by State statutes and are not subject to any Federal requirements or standards.

Full text of the readoption can be found in the New Jersey Administrative Code at N.J.A.C. 16:20A.

(c)

DIVISION OF TRAFFIC ENGINEERING AND LOCAL AID
BUREAU OF LOCAL HIGHWAY DESIGN

New Jersey Transportation Trust Fund Authority Act: Municipal Fund

Readoption: N.J.A.C. 16:20B

Proposed: November 21, 1994 at 26 N.J.R. 4486(b).
Adopted: December 23, 1994 by W. Dennis Keck, Acting Assistant Commissioner for Planning.
Filed: January 12, 1995 as R.1995 d.72, **without change**.
Authority: N.J.S.A. 27:1A-5, 27:1A-6, 27:7-13, 27:7-47, 27:7-13.1 et seq. and the New Jersey Transportation Trust Fund Authority Act, N.J.S.A. 27:1B-1 et seq.
Effective Date: January 12, 1995.
Expiration Date: January 12, 2000.

Summary of Public Comments and Agency Responses:
No comments received.

Executive Order No. 27 Statement

An Executive Order No. 27 analysis is not required because the requirements of this rulemaking are dictated by State statutes and are not subject to any Federal requirements or standards.

Full text of the readoption can be found in the New Jersey Administrative Code at N.J.A.C. 16:20B.

You're viewing an archived copy from the New Jersey State Library.

(a)

DIVISION OF TRAFFIC ENGINEERING AND LOCAL AID
BUREAU OF TRAFFIC ENGINEERING AND SAFETY PROGRAMS

Speed Limits
Route N.J. 179
West Amwell Township, Hunterdon County
Adopted Amendment: N.J.A.C. 16:28-1.158

Proposed: November 21, 1994 at 26 N.J.R. 4486(b).
Adopted: December 29, 1994 by Richard C. Dube, Director, Division of Traffic Engineering and Local Aid.
Filed: January 4, 1995 as R.1995 d.62, **without change**.
Authority: N.J.S.A. 27:1A-5, 27:1A-6, 39:4-98 and 39:4-198.
Effective Date: February 6, 1995.
Expiration Date: May 7, 1998.

Summary of Public Comments and Agency Responses:
No comments received.

Executive Order No. 27 Statement

An Executive Order No. 27 analysis is not required because N.J.S.A. 27:1A-1 et seq. governs the subject of this rulemaking, and there is no Federal requirement or standard that affects the subject of this rulemaking.

Full text of the adoption follows:

16:28-1.158 Route 179
(a) The rate of speed designated for the certain parts of State highway Route 179, described in this subsection, shall be established and adopted as the maximum legal rate of speed:
1. For both directions of traffic:
i. (No change.)
ii. In the Township of West Amwell, Hunterdon County:
(1) (No change.)
(2) Zone Two: 50 mph between Woodward Avenue and the southwesterly line of East Amwell Township (50 feet south of Cedar Crest Drive) (approximate mileposts 1.13 to 4.47) except for 35 mph when passing through the West Amwell Elementary School Zone (approximate mileposts 2.18 to 2.31) while "35 MPH When Flashing" signs are operating during recess or while children are going to or leaving school, during opening or closing hours.
iii. (No change.)
2.-3. (No change.)

(b)

DIVISION OF TRAFFIC ENGINEERING AND LOCAL AID
BUREAU OF TRAFFIC ENGINEERING AND SAFETY PROGRAMS

Restricted Parking and Stopping
Route 57
Washington Borough, Warren County
Adopted Amendment: N.J.A.C. 16:28A-1.36

Proposed: October 17, 1994 at 26 N.J.R. 4160(b).
Adopted: January 9, 1995 by Richard C. Dube, Director, Division of Traffic Engineering and Local Aid.
Filed: January 11, 1995 as R.1995 d.67, **with a technical change** not requiring additional notice and comment (see N.J.A.C. 1:30-4.3).
Authority: N.J.S.A. 27:1A-5, 27:1A-6, 39:4-138.0, 39:4-138.1, 39:4-198 and 39:4-199.
Effective Date: February 6, 1995.
Expiration Date: May 7, 1998.

Summary of Public Comments and Agency Responses:
COMMENT: The Department received a letter from Alan M. Fisher, Borough Manager for the Borough of Washington, dated November 2, 1994, stating that Wandling Avenue was incorrectly spelled as Wanderling Avenue in the proposal that appeared in the October 17, 1994 issue of the New Jersey Register (see 26 N.J.R. 4160(b)).
RESPONSE: The Department responded to Mr. Fisher in a letter dated November 18, 1994, indicating that the necessary correction would be made to the proposed amendment at N.J.A.C. 16:28A-1.36(c)1iii(1)(A) on adoption.

Executive Order No. 27 Statement

An Executive Order No. 27 analysis is not required because N.J.S.A. 27:1A-1 et seq. governs the subject of this rulemaking, and there is no Federal requirement or standard that affects the subject of this rulemaking.

Full text of the adoption follows (additions to proposal indicated in boldface with asterisks ***thus***; deletions from proposal indicated in brackets with asterisks *[thus]*):

16:28A-1.36 Route 57
(a)-(b) (No change.)
(c) The certain parts of State highway Route 57 described in this subsection are designated and establish as a restricted parking space for use of persons who have been issued Special Vehicle Identification Cards by the Division of Motor Vehicles. No other person shall be permitted to park in these areas. In accordance with the provisions of N.J.S.A. 39:4-199, permission is granted to erect appropriate signs at the following established handicapped parking space:
1. In the Borough of Washington, Warrren County:
i.-ii. (No change.)
iii. Along the south side:
(1) West Washington Avenue:
(A) Beginning at a point 166 feet east of the prolongation of the easterly curb line of *[Wanderling]* ***Wandling*** Avenue and extending 23 feet easterly therefrom.
(d) (No change.)

(c)

DIVISION OF TRAFFIC ENGINEERING AND LOCAL AID
BUREAU OF TRAFFIC ENGINEERING AND SAFETY PROGRAMS

Restricted Parking and Stopping
Route 71
Bradley Beach Borough, Monmouth County
Adopted Amendment: N.J.A.C. 16:28A-1.38

Proposed: October 17, 1994 at 26 N.J.R. 4161(a).
Adopted: January 6, 1995 by Richard C. Dube, Director, Division of Traffic Engineering and Local Aid.
Filed: January 10, 1995 as R.1995 d.66, **without change**.
Authority: N.J.S.A. 27:1A-5, 27:1A-6, 39:4-138.1, 39:4-198 and 39:4-199.
Effective Date: February 6, 1995.
Expiration Date: May 7, 1998.

Summary of Public Comments and Agency Responses:
No comments received.

Executive Order No. 27 Statement

An Executive Order No. 27 analysis is not required because N.J.S.A. 27:1A-1 et seq. governs the subject of this rulemaking, and there is no Federal requirement or standard that affects the subject of this rulemaking.

Full text of the adoption follows:

You're viewing an archived copy from the New Jersey State Library.

16:28A-1.38 Route 71

(a) The certain parts of State Highway Route 71 described in this subsection shall be designated and established as "no stopping or standing" zones where stopping or standing is prohibited at all times, except as provided in N.J.S.A. 39:4-139. In accordance with the provisions of N.J.S.A. 39:4-198, proper signs shall be erected.

1. No stopping or standing in Bradley Beach Borough, Monmouth County:

i. Along the easterly side:

(1) From the southerly curb line of Lake Terrace Avenue to a point 150 feet southerly therefrom;

(2) From the northerly curb line of Fifth Avenue to a point 86 feet northerly therefrom.

2.-9. (No change.)

(b)-(d) (No change.)

(a)

DIVISION OF TRAFFIC ENGINEERING AND LOCAL AID

BUREAU OF TRAFFIC ENGINEERING AND SAFETY PROGRAMS

Restricted Parking and Shopping
Route U.S. 206
Princeton Township, Mercer County
Adopted Amendment: N.J.A.C. 16:28A-1.57

Proposed: September 19, 1994 at 26 N.J.R. 3820(a) and November 21, 1994 at 26 N.J.R. 4487(a).

Adopted: December 22, 1994 by Richard C. Dube, Director, Division of Traffic Engineering and Local Aid.

Filed: December 27, 1994 as R.1995 d.54, **without change.**

Authority: N.J.S.A. 27:1A-5, 27:1A-6, 39:4-138.1, 39:4-198 and 39:4-199.

Effective Date: February 6, 1995.

Expiration Date: May 7, 1998.

Summary of Public Comments and Agency Responses:
No comments received.

Full text of the adoption follows:

16:28A-1.57 Route U.S. 206

(a) (No change.)

(b) The certain parts of State highway Route U.S. 206 described in this subsection shall be designated and established as "no parking bus stop" zones where parking is prohibited at all times. In accordance with the provisions of N.J.S.A. 39:4-199, permission is granted to erect appropriate signs at the following established bus stops:

1.-4. (No change.)

5. Along the northbound side in Princeton Township, Mercer County:

i. (No change.)

ii. Near side bus stops:

(1)-(4) (No change.)

(5) Hutchinson Drive (105 feet)

iii. (No change.)

6.-12. (No change.)

(c)-(d) (No change.)

(b)

DIVISION OF TRAFFIC ENGINEERING AND LOCAL AID

BUREAU OF TRAFFIC ENGINEERING AND SAFETY PROGRAMS

Drawbridge Usage
Route N.J. 152
Somers Point City and Egg Harbor Township in Atlantic County
Adopted New Rule: N.J.A.C. 16:30-9.23

Proposed: November 21, 1994 at 26 N.J.R. 4487(b).

Adopted: December 29, 1994 by Richard C. Dube, Director, Division of Traffic Engineering and Local Aid.

Filed: January 4, 1995 as R.1995 d.63, **without change.**

Authority: N.J.S.A. 27:7-17, 27:1A-5, 27:1A-6, 39:4-81 and 39:4-198.

Effective Date: February 6, 1995.

Expiration Date: May 7, 1998.

Summary of Public Comments and Agency Responses:
No comments received.

Executive Order No. 27 Statement

An Executive Order No. 27 analysis is not required because N.J.S.A. 27:1A-1 et seq. governs the subject of this rulemaking, and there is no Federal requirement or standard that affects the subject of this rulemaking.

Full text of the adoption follows:

16:30-9.23 Route 152

(a) The certain parts of State highway Route 152 described in this subsection shall not be used for the purposes described herein. In accordance with N.J.S.A. 39:4-198, authority is granted to erect appropriate signs.

1. No jumping, diving, crabbing, fishing or loitering along both sides of the entire length of the bridges over the waterways listed:

i. In Atlantic County:

(1) The bridge over Bass Harbor in Egg Harbor Township and Somers Point City (approximate milepost 0.17).

(2) The bridge over Broad Thoroughfare in Egg Harbor Township (approximate mileposts 1.3 to 1.9).

(3) The bridge over Doles Creek in Egg Harbor Township (approximate mileposts 2.45).

(c)

DIVISION OF TRAFFIC ENGINEERING AND LOCAL AID

BUREAU OF TRAFFIC ENGINEERING AND SAFETY PROGRAMS

Turn Prohibitions
Route N.J. 47
Middle Township, Cape May County
Adopted Amendment: N.J.A.C. 16:31-1.8

Proposed: October 3, 1994 at 26 N.J.R. 3937(b).

Adopted: November 14, 1994 by Richard C. Dube, Director, Division of Traffic Engineering and Local Aid.

Filed: November 15, 1994 as R.1994 d.607, **with substantive and technical changes** not requiring additional notice and comment (see N.J.A.C. 1:30-4.3).

Authority: N.J.S.A. 27:1A-5, 27:1A-6, 39:4-123, 39:4-183.6 and 39:4-199.1.

Effective Date: February 6, 1995.

Expiration Date: May 7, 1998.

You're viewing an archived copy from the New Jersey State Library.

Summary of Public Comments and Agency Responses:
No comments received.

Full text of the adoption follows (additions to proposal indicated in boldface with asterisks ***thus***; deletions from proposal indicated in brackets with asterisks *[thus]*):

(Agency Note: The following text incorporates changes to N.J.A.C. 16:31-1.8 as adopted at 26 N.J.R. 2915(c) and 4787(c).)

16:31-1.8 Route 47

(a) Turning movements of traffic on certain parts of State highway Route 47 described in this subsection are regulated as follows:

*[i.]****1.*** In Cape May County:

*[(1)]****i.*** In Middle Township:

(1) No left turn:

(A) From northbound on Route 47 to westbound into the K-Mart driveway (approximate milepost 3.85).

(B) Eastbound from the K-Mart driveway to northbound onto Route 47 (approximate milepost 3.85).

(C) From northbound on Route 47 to westbound into the driveway of the United States Post Office (approximate milepost 4.10).

(D) Eastbound from the United States Post Office driveway to northbound on Route 47 (approximate milepost 4.10).

*[ii. In Gloucester County:

(1) In Deptford Township:

(A) From northbound on Route 47 west into Bankbridge Road (approximate milepost 69.42).]*

*[1.]****2.*** (No change in text.)

*[2.]****3.*** In Gloucester County:

i. In Deptford Township:

(1) No left turn:

(A) From north on Route 47 to west on Bankbridge Road ***(approximate milepost 69.42)***.

(a)

DIVISION OF AERONAUTICS AND FREIGHT SYSTEMS

BUREAU OF PORTS, TERMINALS AND FREIGHT SERVICES

Trucks

Adopted Repeals and New Rules: N.J.A.C. 16:32-1 and 3

Readoption with Amendments: N.J.A.C. 16:32 Appendices A, B, and C

Proposed: October 17, 1994 at 26 N.J.R. 4163(a).

Adopted: November 18, 1994 by W. Dennis Keck, Acting Assistant Commissioner for Planning.

Filed: January 12, 1995 as R.1995 d.73, **without change**.

Authority: N.J.S.A. 27:1A-5, 27:1A-6, 39:3-84, and P.L. 1991 c.115 (effective April 19, 1991).

Effective Date: January 12, 1995, Readoption;
February 6, 1995, Repeal, New Rules and Amendments.

Expiration Date: January 12, 2000.

Summary of Public Comments and Agency Responses:
No comments were received.

Executive Order No. 27 Statement

The readoption outlines the same standards and procedures applicable to truck operations within the State of New Jersey in regard to permitted routes, width restrictions, length requirements, access to terminals and other facilities and appeal procedures as required by 23 CFR Part 658.

Full text of the readoption can be found in the New Jersey Administrative Code at N.J.A.C. 16:32 Appendices A, B, and C.

Full text of the adopted new rules and amendments follows:

SUBCHAPTER 1. DESIGNATED ROUTES FOR DOUBLE-TRAILER TRUCK COMBINATIONS AND 102-INCH STANDARD TRUCKS

16:32-1.1 Definitions

The following words and terms, when used in this subchapter, shall have the following meanings, unless the context clearly indicates otherwise.

"Double-trailer truck combination" means a truck tractor-semitrailer-trailer combination, and which meets the equipment length requirement as set forth in N.J.S.A. 39:3-84 and 23 CFR 658.13.

"Household goods carrier" means a vehicle being used to transport household goods and effects to or from a private residence or to or from a place of storage.

"102-inch standard truck" means a truck greater than 96 inches but not greater than 102 inches in width, exclusive of mirrors and other safety devices, and which meets the equipment length requirements as set forth in N.J.S.A. 39:3-84(3) and (4), as amended.

"Terminal" means any location where freight originates, terminates, or is handled in the transportation process and, when serviced by twin trailers, includes sufficient off-street area for ingress, egress, drop off or pick up and maneuvering of twin trailer combinations. Additionally, a motor carrier operating facility, a distribution center, or a rail, waterborne, or air terminal shall be considered the same as a terminal.

16:32-1.2 General provisions

(a) Double-trailer truck combinations and 102-inch standard trucks are permitted to operate in New Jersey only to the extent and under the conditions authorized by the rules in this chapter.

(b) For purposes of clarity, these rules do not supersede other State regulations, municipal ordinances and county resolutions which may otherwise restrict or control the movements of trucks or other vehicles. An example of such a restriction is a maximum weight posting.

(c) The maximum width permitted on the routes designated in N.J.A.C. 16:32-1.3 and N.J.A.C. 16:32-1.5(c) is 102 inches, exclusive of mirrors and other safety devices.

16:32-1.3 Designated routes for double-trailer truck combinations

(a) Except as provided in N.J.A.C. 16:32-1.5, Reasonable access to terminals and other facilities, double-trailer truck combinations may be operated in New Jersey only on the following routes;

1. Interstate highways;
2. New Jersey Turnpike;
3. Atlantic City Expressway;
4. Route 42, from Interstate Route 295 to the Atlantic City Expressway;
5. Route 81;
6. Route 130, from Route 322 at Bridgeport to Interstate Route 295;
7. Route 322, from the Commodore Barry Bridge to Route 130; and
8. Route 440, from the New Jersey Turnpike to Outerbridge Crossing.

(b) Double-trailer truck combinations operating on the New Jersey Turnpike and the Atlantic City Expressway are subject to the regulations of the New Jersey Turnpike Authority and the South Jersey Transportation Authority, respectively.

(c) Notwithstanding any other provisions of this chapter, double-trailer truck combinations shall enter and exit this State only on those specific routes designated for double-trailer truck combinations as authorized in this section.

16:32-1.4 Designated through routes for 102-inch standard trucks

(a) The following routes are designated as through routes for 102-inch standard trucks. 102-inch standard trucks may travel freely for all purposes on these routes:

1. All State and Interstate highway routes with the exception of those listed under Appendix A, incorporated herein by reference;
2. All county "500" series roads with the exception of those listed under Appendix B, incorporated herein by reference;

You're viewing an archived copy from the New Jersey State Library.

3. Those county "600" series roads listed under Appendix C, incorporated herein by reference; and

4. The New Jersey Turnpike, the Atlantic City Expressway and the Garden State Parkway south of Exit 105. Use of these routes is subject to the regulation of the New Jersey Turnpike Authority, the South Jersey Transportation Authority and the New Jersey Highway Authority, respectively.

(b) The routes as outlined in (a) above were selected on the basis of the following criteria:

1. They are State and Interstate highways, county "500" series roads or, in limited cases, county "600" series roads;

2. They connect at both ends with other through routes (although spur routes are possible for geographic or other reasons);

3. They have travel lane widths of 11 feet or greater for 90 percent or more of the segment length. For purposes of this rule, lanes which are only 10 feet wide are counted as 11 feet wide when located on four-lane divided highways with shoulders;

4. Within rural areas, as established by the Federal Highway Administration under the Federal-Aid Highway Program Manual, Volume 4, Chapter 6, Section 3, they may have 10-foot lane widths with an 8-foot shoulder for 90 percent or more of the segment length; and

5. The general criteria within this subsection may be superseded in particular instances by determinations made on the basis of engineering judgment.

(c) Designation of any route in this chapter as a through route for 102-inch standard trucks is a designation which pertains to permissible widths only. Such designation does not always guarantee free movement of all 102-inch standard vehicles. Some 102-inch standard vehicle movements may be restricted on a route because of route or bridge weight restrictions and/or vertical clearance restrictions.

(d) 102-inch standard trucks may be permitted to detour off the authorized routes only to the extent necessary to bypass road closings, and route restrictions such as weight or vertical clearance limits. 102-inch standard trucks shall return to the designated network as soon as practicable during a detour movement.

(e) Notwithstanding any other provisions of this chapter, 102-inch standard trucks shall enter and exit the State only on those specific routes designated for 102-inch standard trucks as authorized in this section.

16:32-1.5 Reasonable access to terminals and other facilities

(a) Any person or terminal operator seeking reasonable access for double-trailer truck combinations, or other STAA authorized vehicles as defined in 23 CFR Part 658.5 and 658.13, or trucks wider than 96 inches but not more than 102 inches in width, from the system designated in N.J.A.C. 16:32-1.3, may do so by utilizing the route system as designated in N.J.A.C. 16:32-1.4, excluding the Garden State Parkway.

(b) Access from a designated route to a terminal should avoid areas considered residential as defined in N.J.S.A. 39:1-1 et seq.

(c) A double-trailer truck combination is permitted access from the system designated in N.J.A.C. 16:32-1.3 to facilities providing food, fuel, repairs and rest, within one mile roadway distance from the designated system except upon those roads, highways, streets, public alleys or other thoroughfares which cannot safely accommodate a double-trailer truck combination and are so designated by the Department.

(d) Unless otherwise prohibited, 102-inch standard trucks are permitted to travel up to two roadway miles from any through route designated in N.J.A.C. 16:32-1.4 for purposes of pickup and delivery and for access to facilities providing food, fuel, repairs and rest, except upon those roads, highways, streets, public alleys or other public thoroughfares which cannot safely accommodate a truck wider than 96 inches and are so designated by the Department. Truck movements which are made under the authority of this subsection must conform to all other State regulations and to any local "truck route" restrictions which have been adopted and posted as provided in N.J.S.A. 40:67-16.1 et seq.

(e) Unless otherwise prohibited as provided in (d) above, 102-inch standard trucks in the following categories are permitted free access to points of loading and unloading:

1. Household goods carriers; and

2. Truck tractor-semitrailer combinations in which the semitrailer has a length not to exceed 28½ feet and which generally operates as part of a double-trailer truck combination.

16:32-1.6 Reasonable access system review process

(a) The Department anticipates that from time to time requests for additions to the reasonable access system will be made. These requests will be investigated by taking into consideration items including, but not limited to:

1. Sight distance at intersections;
2. Traffic volumes;
3. Roadway geometrics;
4. Roadside development or environment;
5. Accident records;
6. The use of the route by other trucks to date; and
7. Alternate routings.

(b) Approval or denial of such requests will be issued based upon those criteria contained in N.J.A.C. 16:32-1.7.

(c) The Department will respond to requests for additions to the reasonable access system within 90 days of receipt of same. If the Department fails to respond to a request within the aforementioned 90 day period, approval for such request shall be deemed automatic.

(d) Requests should be sent to the Manager, Bureau of Traffic Engineering and Safety Programs New Jersey Department of Transportation, CN 613, 1035 Parkway Avenue, Trenton, New Jersey 08625. They should be specific as to the exact route or routes of access being requested.

16:32-1.7 Addition and deletion of through routes

(a) The Department anticipates that from time to time routes will be added to and deleted from the system of authorized routes set forth in N.J.A.C. 16:32-1.4. Additions and deletions will be proposed by the Department as amendments to these rules and will be based on:

1. Revised information on the geometric characteristics of specific roadways;
2. Roadway improvements;
3. Engineering investigations;
4. The need for suitable and adequate routes for through movements and access to points of loading and unloading;
5. Demonstrated safety problems;
6. Public comment;
7. The operating characteristics of 102-inch standard trucks; and
8. Any other factors the Department feels are relevant.

(b) The Department encourages interested parties to submit proposals for additions and deletions to the system. Submissions should be made in writing to the Manager, Bureau of Transportation Data Development, New Jersey Department of Transportation, 1035 Parkway Avenue, CN 600, Trenton, New Jersey 08625. Submissions should be as specific as possible in regard to:

1. Identification of routes proposed for addition or deletion;

2. Information bearing on the criteria for review set forth in (a) above; and

3. Any other information that the party making the submission believes will be helpful to the Department in reviewing the proposed addition or deletion.

(c) Routes may be proposed for addition or deletion regardless of whether the roadway is under the jurisdiction of the State, a county, a municipality or an independent authority. The Department will review every submission made under this subsection and will determine whether or not to propose any amendment to the rules based on that submission. The Department will notify the party making the submission of its determination. The Department's determination will be made on the written record only and will be final.

(d) This section is in addition to the provisions of N.J.S.A. 52:14B-4(f) and N.J.A.C. 1:30-3.6, which entitle an interested person to petition the agency for a rule.

You're viewing an archived copy from the New Jersey State Library.

16:32-1.8 Maps

(a) The Department may, from time to time, prepare and distribute maps and graphic depictions of the designated through truck network. Any map or graphic depiction so prepared shall not be considered a regulatory description of the designated through truck network superseding or in lieu of the textual descriptions adopted in this chapter.

(b) Subject to their availability, maps and graphic depictions of the 102-inch standard truck designated through network may be obtained for a charge of $5.00 each from the Department. Requests should be submitted to the Manager, Bureau of Transportation Data Development, 1035 Parkway Avenue, CN 600, Trenton, New Jersey 08625. Payments should be made to the New Jersey Department of Transportation.

APPENDIX A

The following State highway routes are not designated as through routes for wide trucks, although some of these routes may be usable by wide trucks under the access provisions of N.J.A.C. 16:32-1.5:

Route	Description	Mileage Point
...	...	...

APPENDIX B

The following county "500" series routes are not designated as through routes for wide trucks, although some of these routes may be usable by wide trucks under the access provisions of N.J.A.C. 16:32-1.5:

Route	Description	Mileage Point
...	...	...

(a)

DIVISION OF AERONAUTICS AND FREIGHT SYSTEMS
BUREAU OF PORTS, TERMINALS AND FREIGHT SERVICES

Transportation of Hazardous Materials
Readoption with Amendments: N.J.A.C. 16:49

Proposed: November 21, 1994 at 26 N.J.R. 4488(b).
Adopted: December 23, 1994 by W. Dennis Keck, Acting Assistant Commissioner for Planning.
Filed: January 12, 1995 as R.1995 d.74, **without change**.
Authority: N.J.S.A. 27:1A-5, 27:1A-6, Hazardous Materials Transportation Act, P.L. 93-633 (49 U.S.C. 1801 et seq.) and N.J.S.A. 39:5B-25 et seq. (P.L. 1983, c.401).
Effective Date: January 12, 1995, Readoption;
February 6, 1995, Amendments.
Expiration Date: January 12, 2000.

Summary of Public Comments and Agency Responses:
No comments received.

Executive Order No. 27 Statement

The readoption prescribes the requirements of the New Jersey Department of Transportation governing the transportation of hazardous materials in the State of New Jersey. The rule establishes comprehensive regulation of the shipping, packaging, marking, labelling, placarding, handling, and transportation of hazardous materials, and do not exceed the regulations issued by the United States Department of Transportation, 49 U.S.C. 1801 et seq. and 49 C.F.R.

Full text of the readoption can be found in the New Jersey Administrative Code at N.J.A.C. 16:49.

Full text of the adopted amendments follows:

16:49-1.3 General requirements

(a)-(g) (No change.)

(h) This chapter establishes minimum standards which must be complied with in conjunction with the transportation of hazardous materials. Therefore, in the event of a conflict between this chapter and any other State regulation, the stricter, more stringent standard shall apply and govern. This chapter is intended to complement, and not to limit, those related statutory and regulatory provisions of the New Jersey Department of Environmental Protection regarding hazardous wastes, radioactive materials, spill compensation and control.

(i) This chapter may be amended from time to time by the New Jersey Department of Transportation.

1. The Federal "Hazardous Materials Regulations" referenced herein, are adopted as revised as of September 26, 1994.

2. The Federal Highway Administration, United States Department of Transportation, supplements and amends the Federal Motor Carrier Safety Regulations and the Appendices to the Federal Motor Carrier Safety Regulations on a continuing basis pursuant to the Federal Administrative Procedure Act (5 U.S.C. §554 et seq.) and authority granted to the Secretary, pursuant to 49 U.S.C. App. §2505. Supplements and amendments are published as a notice of proposed rulemaking in the Federal Register and are subject to a period of public comment prior to their adoption. Adoption of supplements and amendments by a final rule action, appear in the Federal Register and indicate an effective date for their implementation and enforcement. The Department will hereafter rely upon the notices of proposed rulemaking and final actions published in the Federal Register supplementing and amending the Federal Motor Carrier Safety Regulations and Appendices to the Federal Motor Carrier Safety Regulations as notice to all interested parties and all persons or entities affected by these regulations. Final rule actions supplementing and amending the Federal Motor Carrier Safety Regulations and Appendices to the Federal Motor Carrier Safety Regulations will hereafter be considered as adopted and incorporated, by reference, herein, upon their publication in the Federal Register, and will become effective on the effective date as published in the Federal Register. Any modification, revision, amendment, delay in implementation, or omission by the Department of any Section(s), Subpart(s), or Part(s) of the Federal Motor Carrier Safety Regulations and Appendices to the Federal Motor Carrier Safety Regulations, and all supplements and amendments thereto will be the subject to a separate notice of proposed rulemaking, pursuant to the New Jersey Administrative Procedure Act, N.J.S.A. 52:14B-1 et seq.

(j)-(k) (No change.)

16:49-1.5 Document availability

(a) Copies of the Federal "Hazardous Materials Regulations," Title 49, Code of Federal Regulations, Parts 171, 172, 173, 174, 177, 178, 179, and 180 revised as of September 26, 1994, and referenced herein, may be purchased from the places listed below. The "Federal Motor Carrier Safety Regulations," Title 49, Code of Federal Regulations, Part 382 and Parts 390 through 397, and the Federal Register and all supplements and amendments thereto, as adopted and incorporated, by reference in the Appendix to the Regulations Regarding the Transportation of Hazardous Materials, may also be purchased at the places listed below.

1. United States Government:
i. Superintendent of Documents
U.S. Government Printing Office
Washington, DC 20402
(202) 783-3238
ii. U.S. Government Printing Office Bookstore
Room 110, 26 Federal Plaza
New York, NY 10278-0081
(212) 264-3825
iii. U.S. Government Printing Office Bookstore
Robert Morris Building
100 North 17th St.
Philadelphia, PA 19103
(215) 636-1900

You're viewing an archived copy from the New Jersey State Library.

iv. Federal Highway Administration
Research and Special Programs Administration
Hazardous Materials Information Exchange
Electronic Bulletin Board
Toll Free: 1-800-752-6367
Dataline: (708) 972-3275

2. Non-governmental sources (Note: The inclusion of a non-governmental source in this paragraph does not constitute an endorsement or recommendation of the product or service offered, sold, or provided by that source or the accuracy of the information said to be contained therein. Non-governmental sources are listed solely as a convenience to interested parties.):

i. American Trucking Associations
2200 Mill Road
Alexandria, VA 22314-4677
Toll Free: 1-800-ATA-LINE (282-5463)

ii. J.J. Keller & Associates
3003 West Breezewood Lane
P.O. Box 368
Neenah, WI 54957-0368
Toll Free: 1-800-558-5011
(414) 722-2848

iii. Regulations Management Corporation
1505 Arlington Road
Bloomington, IN 47404-0809
(812) 333-7347

iv. Regulation Scanning
30 West Third St.
Williamsport, PA 17701
Toll Free: 1-800-326-9303

(b) Copies of the Federal "Hazardous Materials Regulations" and the "Federal Motor Carrier Safety Regulations" are available for review at the following public libraries:

1. New Jersey State Library
185 West State Street
Trenton, NJ 08625
(609) 292-6220

2. Newark Public Library
5 Washington Street
Newark, NJ 07101
(201) 733-7782

3. Jersey City Public Library
U.S. Government Documents Section
472 Jersey Avenue
Jersey City, NJ 07304
(201) 547-4517

4. New Brunswick Public Library
60 Livingston Avenue
New Brunswick, NJ 08901
(908) 745-5108

5. Trenton Public Library
120 Academy Street
Trenton, NJ 08608
(609) 392-7188

6. Camden County Public Library
Laurel Road
Voorhees, NJ 08043
(609) 772-1636

7. Cherry Hill Public Library
1100 Kings Highway, North
Cherry Hill, NJ 08034
(609) 667-0300

(c) Copies of the Federal "Hazardous Materials Regulations" and the "Federal Motor Carrier Safety Regulations" noted above are further available for review at the New Jersey Department of Transportation, Bureau of Ports, Terminals and Freight Services, 1035 Parkway Avenue, Trenton, NJ 08625. Hours at this office are 8:30 A.M. to 5:00 P.M., Monday through Friday. This office may be contacted at (609) 530-8031.

16:49-1.6 Assistance

(a) For general assistance and procedural questions in matters related to New Jersey's Hazardous Materials Regulations, as adopted herein, contact:

Bureau of Ports, Terminals and Freight Services
New Jersey Department of Transportation
1035 Parkway Avenue
CN 600
Trenton, NJ 08625
(609) 530-8031

(b) For assistance in matters related to enforcement or interpretation of the Hazardous Materials Regulations, contact:

Office of Hazardous Materials Transportation,
Compliance and Enforcement
New Jersey Division of State Police
Division Headquarters
River Road
P.O. Box 7068
West Trenton, NJ 08628
(609) 882-2000, extension 2582 or 2586

(c) Statements or opinions provided by the Bureau of Ports, Terminals and Freight Services or by the Division of State Police do not constitute legal advice.

SUBCHAPTER 2. ADOPTION OF PORTIONS OF TITLE 49, CODE OF FEDERAL REGULATIONS, BY REFERENCE, AND ADOPTION AND INCORPORATION, BY REFERENCE, OF FEDERAL MOTOR CARRIER SAFETY REGULATIONS WHEN ADOPTED, AMENDED, OR SUPPLEMENTED BY THE FHWA.

16:49-2.1 Parts adopted by reference

(a) The New Jersey Department of Transportation, pursuant to N.J.S.A. 39:5B-25 et seq., hereby incorporates by reference the following portions of Title 49—Transportation, Code of Federal Regulations, revised as of September 26, 1994. The parts adopted by reference are found in Chapter 1, referred to as "Research and Special Programs Administration, Department of Transportation." These parts are detailed in the APPENDIX TO THE REGULATIONS REGARDING THE TRANSPORTATION OF HAZARDOUS MATERIALS. The portions adopted are summarized below.

1.-8. (No change.)

(b) The Parts and Appendices of the Federal Motor Carrier Safety Regulations and all supplements and amendments thereto, adopted as a final rule action by the Federal Highway Administration, United States Department of Transportation, and adopted and incorporated, by reference, herein, by the Department, are summarized below.

1. Part 382—General.
2. Part 390—Federal Motor Carrier Safety Regulations: General.
3. Part 391—Qualification of Drivers.
4. Part 392—Driving of Motor Vehicles.
5. Part 393—Parts and Accessories Necessary for Safe Operation.
6. Part 394—(Removed and Reserved).
7. Part 395—Hours of Service of Drivers.
8. Part 396—Inspection, Repair, and Maintenance.
9. Part 397—Transportation of Hazardous Materials; Driving and Parking Rules.
10. Part 177—Carriage by Public Highway.
11. Part 178—Shipping Container.
12. Part 179—Specifications for Tank Cars.
13. Part 180—Continuing Qualification and Maintenance of Packagings.

(c) Supplements and amendments to the Federal Motor Carrier Safety Regulations and Appendices to the Federal Motor Carrier Safety Regulations which have been adopted as a final rule action by the Federal Highway Administration and become effective after September 26, 1994, are not listed in the appendix to this chapter. Those supplements and amendments are, pursuant to the above,

You're viewing an archived copy from the New Jersey State Library.

adopted and incorporated, by reference, herein as if set forth in full. The full text of such supplements and amendments can be found by examining the Federal Register published after the above noted date. See also N.J.A.C. 16:49-1.5, Document availability, and N.J.A.C. 16:49-1.6, Assistance.

APPENDIX TO THE REGULATIONS REGARDING THE TRANSPORTATION OF HAZARDOUS MATERIALS

This Appendix to the Regulations Regarding the Transportation of Hazardous Materials details the adopted portions of Title 49, C.F.R., by section. All sections are listed by number and title to identify content for the reader. Detailed modifications are stated within the appropriate section.

CHAPTER 1
RESEARCH AND SPECIAL PROGRAMS ADMINISTRATION, U.S. DEPARTMENT OF TRANSPORTATION

(Subchapter B is not being incorporated upon adoption)

SUBCHAPTER C—HAZARDOUS MATERIALS REGULATIONS

PART 171—GENERAL INFORMATION, REGULATIONS, AND DEFINITIONS

. . .

Section 171.16 Detailed hazardous materials incident reports. (New Jersey revision as noted below.)

Section 171.16 is revised to state the following: (Note: Paragraph (a) and (b) have been changed and paragraph (e) has been added.)

(a) Each carrier who transports hazardous materials shall report in writing in duplicate on DOT Form 5800.1 (Rev. 6/89) to the U.S. Department of Transportation within 30 days of the date of discovery, unless the requirements of paragraph (e) in this section are met, each incident that occurs during the course of transportation (including loading, unloading, or temporary storage) in which any of the circumstances set forth in Section 171.15(a) occurs or there has been an unintentional release of hazardous materials from a package (including a tank) or any quantity of hazardous waste has been discharged during transportation. If a report pertains to a hazardous waste discharge—

(1) (No change.)

(2) An estimate of the quantity of the waste removed from the scene, the name and address of the facility to which it was taken, and the manner of disposition of any removed waste must be entered in Section IX of the report form (F 5800.1) (Rev. 6/89).

(b)-(e) (No change.)

. . .

Section 171.20 Submission of Examination Reports.

. . .

PART 172—HAZARDOUS MATERIALS TABLE, SPECIAL PROVISIONS, HAZARDOUS MATERIALS COMMUNICATIONS, EMERGENCY RESPONSE INFORMATION, AND TRAINING REQUIREMENTS

. . .

Subpart D—Marking.

. . .

Section 172.301 General marking requirements for non-bulk packaging.

. . .

Section 172.322 Marine Pollutants.

. . .

Section 172.326 Portable tanks.

. . .

PART 173—SHIPPERS—GENERAL REQUIREMENTS FOR SHIPMENTS AND PACKAGINGS

. . .

Subpart E—Non-bulk Packaging for Hazardous Materials Other Than Class I and Class 7

. . .

Section 173.181 Pyrophoric materials (liquids).

. . .

Section 173.229 Chloric acid solution or chlorine dioxide hydrate, frozen.

. . .

Subpart G—Gases; Preparation and Packaging.

Section 173.300 (Reserved)

. . .

Section 173.305 Charging of cylinders with a mixture of compressed gas and other material.

. . .

Section 173.309 Fire extinguishers.

. . .

Subpart H—(Reserved)

Section 173.334 Organic phosphates mixed with compressed gas.

. . .

Section 173.336 Nitrogen dioxide, liquid; nitrogen peroxide, liquid; and nitrogen tetroxide, liquid.

Section 173.337 Nitric oxide.

. . .

Subpart I—Radioactive Materials.

. . .

Section 173.453 Fissile materials—exceptions

. . .

PART 174—CARRIAGE BY RAIL

. . .

Subpart B—General Operating Requirements

. . .

Section 174.47 Correction of violations.

. . .

Subpart D—Handling of Placarded Rail Cars, Transport Vehicles and Freight Containers

Section 174.82 General requirements for the handling of placarded rail cars, transport vehicles, freight containers, and bulk packagings.

. . .

Subpart E—Class I (Explosive) Materials

. . .

Section 174.112 Loading Division 1.3 (Class B explosive) materials (Also see Section 174.101).

. . .

Subpart L—Detailed Requirements for Class 8 (Corrosive) Materials

. . .

Section 174.812 (Reserved)

. . .

PART 177—CARRIAGE BY PUBLIC HIGHWAY

. . .

Motor carriers and other persons subject to this part shall comply with 49 CFR Part 382 and Parts 390 through 397 (excluding section 391.69, 393.81, and 397.3), and all supplements and amendments thereto, to the extent those rules apply. Carriers transporting hazardous materials, substances, or wastes as defined herein must comply with these parts as listed below.

(See N.J.A.C. 16:49-1.3(1) herein).

MOTOR CARRIER SAFETY REGULATIONS

SUBCHAPTER B—FEDERAL MOTOR CARRIER SAFETY REGULATIONS

PART 382—CONTROLLED SUBSTANCES AND ALCOHOL USE AND TESTING

Subpart A—General

Section 382.101 Purpose.

Section 382.103 Applicability.

Section 382.105 Testing procedures.

Section 382.107 Definitions.

Section 382.109 Preemption of State and local laws.

Section 382.111 Other requirements imposed by employers.

You're viewing an archived copy from the New Jersey State Library.

Section 382.113 Requirement for notice.
Section 382.115 Starting date for testing programs.

Subpart B—Prohibitions
Section 382.201 Alcohol concentration.
Section 382.204 Alcohol possession.
Section 382.205 On-duty use.
Section 382.207 Pre-duty use.
Section 382.209 Use following an accident.
Section 382.211 Refusal to submit to a required alcohol or controlled substances test.
Section 382.213 Controlled substances use.
Section 382.215 Controlled substances testing.

Subpart C—Tests Required
Section 382.301 Pre-employment testing.
Section 382.303 Post-accident testing.
Section 382.305 Random testing.
Section 382.307 Reasonable suspicion testing.
Section 382.309 Return-to-duty testing.
Section 382.311 Follow-up testing.

Subpart D—Handling of Test Results, Record Retention, and Confidentiality
Section 382.401 Retention of records.
Section 382.403 Reporting of results in a management information system.
Section 382.405 Access to facilities and records.
Section 382.407 Medical review officer notifications to the employer.
Section 382.409 Medical review officer record retention for controlled substances.
Section 382.411 Employer notifications.
Section 382.413 Release of alcohol and controlled substances test information by previous employers.

Subpart E—Consequences for Drivers Engaging in Substance Use-Related Conduct
Section 382.501 Removal from safety-sensitive function.
Section 382.503 Required evaluation and testing.
Section 382.505 Other alcohol-related conduct.
Section 382.507 Penalties.

Subpart F—Alcohol Misuse and Controlled Substances Use Information, Training, and Referral
Section 382.601 Motor carrier obligation to promulgate a policy on the misuse of alcohol and use of controlled substances.
Section 382.603 Training for supervisors.
Section 382.605 Referral, evaluation, and treatment.

PART 390—FEDERAL MOTOR CARRIER SAFETY REGULATIONS: GENERAL

. . .

Subpart B—General Requirements and Information

. . .

Section 390.15 Assistance in investigations and special studies.

. . .

Section 390.21 Marking of commercial motor vehicles.

(Section 390.21 is modified to state the following:) A commercial motor vehicle operated in intrastate commerce shall be subject to the provisions of N.J.S.A. 39:4-46.

Section 390.23 Relief from regulations.

(Section 390.23 is modified to state the following:) The following commercial motor vehicles, operating in intrastate commerce, are exempt from this section when any emergency occurs that affects the citizens of New Jersey:

(a) Commercial motor vehicles which are owned, operated, or leased by a public or quasi-public or private entity in this State, said entity being subject to the jurisdiction of the Board of Regulatory Commissioners; or

(b) Commercial motor vehicles which are owned, operated or leased by a public or quasi-public or private entity in this State and which is or will be operated under a contract to the State of New Jersey or a governmental or quasi-governmental entity thereof.

Such emergencies include, but are not limited to, weather and other acts of nature (e.g., snow, flooding, earthquake, power/telephone outages, disruptions to power or telephone transmission lines or facilities, supply lines or facilities for steam, water, or gas) and other emergencies (e.g., motor vehicle accidents, industrial accidents, fires, etc.)

. . .

PART 391—QUALIFICATION OF DRIVERS

. . .

Subpart C—Background and character

Section 391.21 Application for employment as specified in this Section 391.21 is not required for persons already employed by the same carrier as of March 4, 1985.

. . .

Subpart D—Examinations and Tests

Section 391.31 Road test.

(Section 391.31 is modified to state the following:)

The provisions of Section 391.31 do not apply to a driver engaged in intrastate commerce who possesses a valid New Jersey Commercial Driver License (CDL) as of February 6, 1995, and transports hazardous material(s) requiring hazardous material(s) placarding in accordance with Subpart F of Part 172 of the Hazardous Materials Regulations (49 C.F.R. §172.500 et seq.), or operates a vehicle displaying a hazardous material(s) placard.

. . .

Section 391.35 Written examination.

(Section 391.35 is modified to state the following:)

The provisions of Section 391.35 do not apply to a driver engaged in intrastate commerce who possesses a valid New Jersey Commercial Driver License (CDL) as of February 6, 1995, and transports hazardous material(s) requiring hazardous material(s) placarding in accordance with Subpart F of Part 172 of the Hazardous Materials Regulations (49 C.F.R. §172.500 et seq.), or operates a vehicle displaying a hazardous material(s) placard.

. . .

Subpart E—Physical Qualifications and Examinations

Section 391.41 Physical qualifications for drivers.

(Section 391.41 is modified to state the following:)

A driver engaged in intrastate commerce who possesses a valid New Jersey Commercial Driver License (CDL) as of September 20, 1993, but who is not physically qualified to drive under Section 391.41(b) of the Subchapter may continue to drive a motor vehicle, unless the driver is transporting hazardous material(s) requiring hazardous material(s) placarding in accordance with Subpart F of Part 172 of the Hazardous Materials Regulations (49 C.F.R. §172.500 et seq.), or is operating a vehicle displaying a hazardous material(s) placard.

. . .

Subpart G—Limited Exemptions

Section 391.71 Intrastate drivers of vehicles transporting combustible liquids

(Section 391.71(a) and (b) are revised to state the following:)

(a) The provisions of Section 391.11(b) (relating to minimum age), Section 391.21 (relating to application for employment), Section 391.23 (relating to investigations and inquiries), Section 391.31 (relating to road test), and Section 391.35 (relating to written examination) do not apply to a driver who is otherwise qualified and was a regularly employed driver (as defined in Section 390.5 of these regulations) as of January 1, 1991, who possesses a valid New Jersey Commercial Driver License (CDL), and continues to be a regularly employed driver of that motor carrier and drives a motor vehicle that:

1.-2. (No change.)

(b) (No change.)

Subpart H—Controlled Substances Testing

. . .

Section 391.85 Definitions.

(Section 391.85 is revised to state the following:)

You're viewing an archived copy from the New Jersey State Library.

"Commercial Motor Vehicle—Intrastate Commerce" means a motor vehicle or combination of motor vehicles used or designed to transport passengers or property in intrastate comment:

(a) If the vehicle has a gross vehicle weight rating of 26,001 or more pounds or displays a gross vehicle weight rating of 26,001 or more pounds;

(b) If the vehicle has a gross combination weight rating of 26,001 or more pounds inclusive of a towed unit with a gross vehicle weight rating of more than 10,000 pounds;

(c) If the vehicle is designed to transport 16 or more passengers including the driver;

(d) If the vehicle is designed to transport 8 or more but less than 16 persons, including the driver, and is used to transport such persons for hire on a daily basis to and from places of employment; or

(e) If the vehicle is transporting or used in the transportation of hazardous material(s) and is required to be placarded in accordance with Subpart F of Part 172 of the Hazardous Materials Regulations (49 C.F.R. §172.500 et seq.), or the vehicle displays a hazardous material(s) placard.

. . .

Section 391.125 Termination schedule of this subpart.

PART 392—DRIVING OF MOTOR VEHICLES

. . .

Subpart G—Prohibited practices

. . .

Section 392.71 Radar detectors; use and/or possession.

PART 393—PARTS AND ACCESSORIES NECESSARY FOR SAFE OPERATION

. . .

Subpart B—Lighting Devices, Reflectors, and Electrical Equipment

. . .

Section 393.17 Lamps and reflectors—combinations in driveaway-towaway operation.

. . .

Subpart D—Glazing and Window Construction

. . .

Section 393.62 Window obstruction(s).

Subpart G—Miscellaneous Parts and Accessories

. . .

Section 393.79 Defrosting device.

. . .

Section 393.83 Exhaust systems.

. . .

PART 394—(RESERVED)

. . .

PART 395—HOURS OF SERVICE OF DRIVERS

. . .

Section 395.7 (Reserved)

. . .

Section 395.10 (Reserved)
Section 395.11 (Reserved)
Section 395.12 (Reserved)

. . .

PART 396—INSPECTION, REPAIR, AND MAINTENANCE

. . .

PART 397—TRANSPORTATION OF HAZARDOUS MATERIALS; DRIVING AND PARKING RULES

. . .

APPENDIX D TO SUBCHAPTER B—TABLE OF DISQUALIFYING DRUGS AND OTHER SUBSTANCES, SCHEDULE I.

APPENDIX E TO SUBCHAPTER B—TABLES OF DISQUALIFYING DRUGS AND OTHER SUBSTANCES, SCHEDULES II THROUGH V.

APPENDIX F TO SUBCHAPTER B—COMMERCIAL ZONES

Section 1 New York, NY
Section 6 Philadelphia, PA
Section 11 Commercial zones of municipalities in New Jersey within 5 miles of New York, NY
Section 12 Commercial zones of municipalities in Westchester and Nassau Counties, NY
Section 43 Definitions.
Section 44 Commericial zones determined generally, with exceptions.
Section 45 Controlling distances and population data.

APPENDIX G TO SUBCHAPTER B—MINIMUM PERIODIC INSPECTION STANDARDS.

. . .

PART 178—SHIPPING CONTAINER SPECIFICATIONS

Section 178.1 Purpose and scope.

. . .

Subpart B—Specifications for Inside Containers, and Linings

Section 178.33 Specification 2P; inner nonrefillable metal receptacles.
Section 178.33-1 Compliance.
Section 178.33-2 Type and size.
Section 178.33-3 Inspection.
Section 178.33-4 Duties of inspector.
Section 178.33-5 Material.
Section 178.33-6 Manufacture.
Section 178.33-7 Wall thickness.
Section 178.33-8 Tests.
Section 178.33-9 Marking.
Section 178.33a Specification 2Q.
Section 178.33a-2 Type and size.
Section 178.33a-3 Inspection.
Section 178.33a-4 Duties of inspector.
Section 178.33a-5 Material.
Section 178.33a-6 Manufacture.
Section 178.33a-7 Wall thickness.
Section 178.33a-8 Tests.
Section 178.33a-9 Marking.

Subpart C—Specifications for Cylinders

Section 178.36 Specification 3A; seamless steel cylinders or 3AX; seamless steel cylinders of capacity over 1,000 pounds water volume.
Section 178.36-1 Compliance.
Section 178.36-2 Type, size and service pressure.
Section 178.36-3 Inspection by whom and where.
Section 178.36-4 Duties of inspector.
Section 178.36-5 Steel.
Section 178.36-6 Identification of material.
Section 178.36-7 Defects.
Section 178.36-8 Manufacture.
Section 178.36-9 Welding or brazing.
Section 178.36-10 Wall thickness.
Section 178.36-11 Heat treatment.
Section 178.36-12 Openings in cylinders and connections (valves, fuse plugs, etc.) for those openings.
Section 178.36-13 Safety devices and protection for valves, safety devices, and other connections, if applied.
Section 178.36-14 Hydrostatic test.
Section 178.36-15 Flattening test.
Section 178.36-16 Physical test.
Section 178.36-17 Acceptable results for physical and flattening tests.
Section 178.36-18 Leakage test.
Section 178.36-19 Rejected cylinders.
Section 178.36-20 Marking.
Section 178.36-21 Size of marks.
Section 178.36-22 Inspector's report.
Section 178.36-23 Report retention.

You're viewing an archived copy from the New Jersey State Library.

Section 178.37 Specification 3AA; seamless steel cylinders made of definitely prescribed steels or 3AAX; seamless steel cylinders made of definitely prescribed steels of capacity over 1,000 pounds water volume.
Section 178.37-1 Compliance.
Section 178.37-2 Type, size and service pressure.
Section 178.37-3 Inspection by whom and where.
Section 178.37-4 Duties of inspector.
Section 178.37-5 Authorized steel.
Section 178.37-6 Identification of material.
Section 178.37-7 Defects.
Section 178.37-8 Manufacture.
Section 178.37-9 Welding or brazing.
Section 178.37-10 Wall thickness.
Section 178.37-11 Heat treatment.
Section 178.37-12 Openings in cylinders and connections (valves, fuse plugs, etc.) for those openings.
Section 178.37-13 Safety devices and protection for valves, safety devices, and other connections, if applied.
Section 178.37-14 Hydrostatic test.
Section 178.37-15 Flattening test.
Section 178.37-16 Physical test.
Section 178.37-17 Physical and flattening tests.
Section 178.37-18 Leakage test.
Section 178.37-19 Rejected cylinders.
Section 178.37-20 Marking.
Section 178.37-21 Size of marks.
Section 178.37-22 Inspector's report.
Section 178.37-23 Report retention.
Section 178.38 Specification 3B; seamless steel cylinders.
Section 178.38-1 Compliance.
Section 178.38-2 Type, size and service pressure.
Section 178.38-3 Inspection by whom and where.
Section 178.38-4 Duties of inspector.
Section 178.38-5 Steel.
Section 178.38-6 Identification of material.
Section 178.38-7 Defects.
Section 178.38-8 Manufacture.
Section 178.38-9 Welding or brazing.
Section 178.38-10 Wall thickness.
Section 178.38-11 Heat treatment.
Section 178.38-12 Openings in cylinders and connections (valves, fuse plugs, etc.) for those openings.
Section 178.38-13 Safety devices and protection for valves, safety devices, and other connections, if applied.
Section 178.38-14 Hydrostatic test.
Section 178.38-15 Flattening test.
Section 178.38-16 Physical test.
Section 178.38-17 Acceptable results for physical and flattening tests.
Section 178.38-18 Leakage test.
Section 178.38-19 Rejected cylinders.
Section 178.38-20 Marking.
Section 178.38-21 Size of marks.
Section 178.38-22 Inspector's report.
Section 178.38-23 Report retention.
Section 178.39 Specification 3BN; seamless nickel cylinders.
Section 178.39-1 Compliance.
Section 178.39-2 Type, size and service pressure.
Section 178.39-3 Inspection by whom and where.
Section 178.39-4 Duties of inspector.
Section 178.39-5 Nickel.
Section 178.39-6 Identification of material.
Section 178.39-7 Defects.
Section 178.39-8 Manufacture.
Section 178.39-9 Welding or brazing.
Section 178.39-10 Wall thickness.
Section 178.39-11 Heat treatment.
Section 178.39-12 Openings in cylinders and connections (valves, fuse plugs, etc.) for those openings.
Section 178.39-13 Safety devices and protection for valves, safety devices, and other connections, if applied.
Section 178.39-14 Hydrostatic test.
Section 178.39-15 Flattening test.
Section 178.39-16 Physical test.
Section 178.39-17 Acceptable results for physical and flattening tests.
Section 178.39-18 Rejected cylinders.
Section 178.39-19 Marking.
Section 178.39-20 Size of marks.
Section 178.39-21 Inspector's report.
Section 178.39-22 Report retention.
Section 178.42 Specification 3E; seamless steel cylinders.
Section 178.42-1 Compliance.
Section 178.42-2 Type, size and service pressure.
Section 178.42-3 Inspection by whom and where.
Section 178.42-4 Duties of inspector.
Section 178.42-5 Steel.
Section 178.42-6 Identification of steel.
Section 178.42-7 Defects.
Section 178.42-8 Manufacture.
Section 178.42-9 Openings in cylinders and connections (valves, fuse plugs, etc.) for those openings.
Section 178.42-10 Safety devices and protection for valves, safety devices, and other connections, if applied.
Section 178.42-11 Hydrostatic test.
Section 178.42-12 Leakage test.
Section 178.42-13 Rejected cylinders.
Section 178.42-14 Marking.
Section 178.42-15 Inspector's report.
Section 178.42-16 Report retention.
Section 178.44 Specification 3HT; inside containers, seamless steel cylinders for aircraft use made of definitely prescribed steel.
Section 178.44-1 Compliance.
Section 178.44-2 Type, size and service pressure.
Section 178.44-3 Inspection by whom and where.
Section 178.44-4 Duties of inspector.
Section 178.44-5 Authorized steel.
Section 178.44-6 Identification of material.
Section 178.44-7 Defects.
Section 178.44-8 Manufacture.
Section 178.44-9 Welding or brazing.
Section 178.44-10 Wall thickness.
Section 178.44-11 Heat treatment.
Section 178.44-12 Openings in cylinders and connections (valves, fuse plugs, etc.) for those openings.
Section 178.44-13 Safety devices and protection for valves, safety devices, and other connections, if applied.
Section 178.44-14 Hydrostatic test.
Section 178.44-15 Cycling test.
Section 178.44-16 Burst test.
Section 178.44-17 Flattening test.
Section 178.44-18 Physical tests.
Section 178.44-19 Magnetic particle inspection.
Section 178.44-20 Leakage test.
Section 178.44-21 Acceptable results of tests.
Section 178.44-22 Rejected cylinders.
Section 178.44-23 Marking.
Section 178.44-24 Name plates.
Section 178.44-25 Inspector's report.
Section 178.44-26 Report retention.
Section 178.45 Specification 3T; seamless steel cylinders.
Section 178.45-1 Compliance.
Section 178.45-2 Type, size and service pressure.
Section 178.45-3 Inspection by whom and where.
Section 178.45-4 Duties of inspector.
Section 178.45-5 Material, steel.
Section 178.45-6 Manufacture.
Section 178.45-7 Wall thickness.
Section 178.45-8 Heat treatment.

You're viewing an archived copy from the New Jersey State Library.

Section 178.45-9 Openings
Section 178.45-10 Safety devices and protection for valves, safety devices, and other connections.
Section 178.45-11 Hydrostatic test.
Section 178.45-12 Ultrasonic examinations.
Section 178.45-13 Basic requirements for tension and Charpy impact tests.
Section 178.45-14 Basic conditions for acceptable physical testing.
Section 178.45-15 Acceptable physical test results.
Section 178.45-16 Rejected cylinders.
Section 178.45-17 Markings.
Section 178.45-18 Inspector's report.
Section 178.46 Specification 3AL; seamless cylinders made of definitely prescribed aluminum alloys.
Section 178.46-1 Each specification 3AL seamless cylinder must comply with this section.
Section 178.46-2 Size and service pressure.
Section 178.46-3 Inspection.
Section 178.46-4 Duties of inspector.
Section 178.46-5 Authorized material and identification of material.
Section 178.46-6 Manufacture.
Section 178.46-7 Wall thickness.
Section 178.46-8 Openings.
Section 178.46-9 Heat treatment.
Section 178.46-10 Pressure relief devices and protection for valves, pressure relief devices, and other connections.
Section 178.46-11 Hydrostatic test.
Section 178.46-12 Flattening test.
Section 178.46-13 Mechanical properties test.
Section 178.46-14 Rejected cylinders.
Section 178.46-15 Marking.
Section 178.46-16 Inspector's report.
Section 178.47 Specification 4DS; inside containers, welded stainless steel for aircraft use.
Section 178.47-1 Compliance.
Section 178.47-2 Type, size and service pressure.
Section 178.47-3 Inspection by whom and where.
Section 178.47-4 Duties of inspector.
Section 178.47-5 Steel.
Section 178.47-6 Identification of material.
Section 178.47-7 Defects.
Section 178.47-8 Manufacture.
Section 178.47-9 Attachments.
Section 178.47-10 Wall thickness.
Section 178.47-11 Heat treatment.
Section 178.47-12 Openings in container.
Section 178.47-13 Safety relief devices.
Section 178.47-14 Process treatment.
Section 178.47-15 Hydrostatic test.
Section 178.47-16 Radiographic inspection.
Section 178.47-17 Burst test.
Section 178.47-18 Flattening test.
Section 178.47-19 Acceptable results for flattening and burst tests.
Section 178.47-20 Rejected containers.
Section 178.47-21 Marking.
Section 178.47-22 Size of marks.
Section 178.47-23 Inspector's report.
Section 178.47-24 Report retention.
Section 178.50 Specification 4B; welded and brazed steel cylinders.
Section 178.50-1 Compliance.
Section 178.50-2 Type, size and service pressure.
Section 178.50-3 Inspection by whom and where.
Section 178.50-4 Duties of inspector.
Section 178.50-5 Steel.
Section 178.50-6 Identification of material.
Section 178.50-7 Defects.
Section 178.50-8 Manufacture.
Section 178.50-9 Welding or brazing.
Section 178.50-10 Wall thickness.
Section 178.50-11 Heat treatment.
Section 178.50-12 Opening in cylinders.
Section 178.50-13 Safety devices and protection for valves, safety devices, and other connections, if applied.
Section 178.50-14 Hydrostatic test.
Section 178.50-15 Flattening test.
Section 178.50-16 Physical test.
Section 178.50-17 Acceptable results for physical and flattening tests.
Section 178.50-18 Rejected cylinders.
Section 178.50-19 Marking.
Section 178.50-20 Size of marks.
Section 178.50-21 Inspector's report.
Section 178.50-22 Report retention.
Section 178.51 Specification 4BA; welded or brazed steel cylinders made of definitely prescribed steels.
Section 178.51-1 Compliance.
Section 178.51-2 Type, size and service pressure.
Section 178.51-3 Inspection by whom and where.
Section 178.51-4 Duties of inspector.
Section 178.51-5 Steel.
Section 178.51-6 Identification of material.
Section 178.51-7 Defects.
Section 178.51-8 Manufacture.
Section 178.51-9 Welding and brazing.
Section 178.51-10 Wall thickness.
Section 178.51-11 Heat treatment.
Section 178.51-12 Openings in cylinders.
Section 178.51-13 Pressure relief devices and protection for valves, safety devices, and other connections, if applied.
Section 178.51-14 Hydrostatic test.
Section 178.51-15 Physical test.
Section 178.51-16 Elongation.
Section 178.51-17 Tests of welds.
Section 178.51-18 Rejected cylinders.
Section 178.51-19 Marking.
Section 178.51-20 Authorized steel.
Section 178.51-21 Inspector's report.
Section 178.51-22 Report retention.
Section 178.53 Specification 4D; inside containers, welded steel for aircraft use.
Section 178.53-1 Compliance.
Section 178.53-2 Type, size and service pressure.
Section 178.53-3 Inspection by whom and where.
Section 178.53-4 Duties of inspector.
Section 178.53-5 Steel.
Section 178.53-6 Identification of material.
Section 178.53-7 Defects.
Section 178.53-8 Manufacture.
Section 178.53-9 Wall thickness.
Section 178.53-10 Heat treatment.
Section 178.53-11 Openings in container.
Section 178.53-12 Safety devices and protection for valves, safety devices, and other connections, if applied.
Section 178.53-13 Hydrostatic test.
Section 178.53-14 Flattening test for spheres and cylinders.
Section 178.53-15 Physical test and specimens for spheres and cylinders.
Section 178.53-16 Acceptable results for physical and flattening tests.
Section 178.53-17 Rejected cylinders.
Section 178.53-18 Marking.
Section 178.53-19 Size of marks.
Section 178.53-20 Inspector's report.
Section 178.53-21 Report retention.
Section 178.55 Specification 4B240ET; welded and brazed cylinders made from electric resistance welded tubing.
Section 178.55-1 Compliance.
Section 178.55-2 Type, spinning process, size and service pressure.

You're viewing an archived copy from the New Jersey State Library.

Section 178.55-3 Inspection by whom and where.
Section 178.55-4 Duties of inspector.
Section 178.55-5 Steel.
Section 178.55-6 Identification of material.
Section 178.55-7 Defects.
Section 178.55-8 Manufacture.
Section 178.55-9 Welding or brazing.
Section 178.55-10 Wall thickness.
Section 178.55-11 Heat treatment.
Section 178.55-12 Openings in cylinders.
Section 178.55-13 Safety devices and protection for valves, safety devices, and other connections, if applied.
Section 178.55-14 Hydrostatic test.
Section 178.55-15 Flattening test.
Section 178.55-16 Physical test.
Section 178.55-17 Acceptable results for physical and flattening tests.
Section 178.55-18 Leakage test.
Section 178.55-19 Rejected cylinders.
Section 178.55-20 Marking.
Section 178.55-21 Size of marks.
Section 178.55-22 Inspector's report.
Section 178.55-23 Report retention.
Section 178.56 Specification 4AA480; welded steel cylinders made of definitely prescribed steel
Section 178.56-1 Compliance.
Section 178.56-2 Type, size and service pressure.
Section 178.56-3 Inspection by whom and where.
Section 178.56-4 Duties of inspector.
Section 178.56-5 Steel.
Section 178.56-6 Identification of material.
Section 178.56-7 Defects.
Section 178.56-8 Manufacture.
Section 178.56-9 Welding.
Section 178.56-10 Wall thickness.
Section 178.56-11 Heat treatment.
Section 178.56-12 Openings in cylinders.
Section 178.56-13 Safety devices and protection for valves, safety devices, and other connections, if applied.
Section 178.56-14 Hydrostatic test.
Section 178.56-15 Physical test.
Section 178.56-16 Elongation.
Section 178.56-17 Tests of welds.
Section 178.56-18 Rejected cylinders.
Section 178.56-19 Marking.
Section 178.56-20 Authorized steel.
Section 178.56-21 Inspector's report.
Section 178.56-22 Report retention.
Section 178.57 Specification 4L; welded cylinders insulated.
Section 178.57-1 Compliance.
Section 178.57-2 Type, size, service pressure, and design service temperature.
Section 178.57-3 Inspection by whom and where.
Section 178.57-4 Duties of inspector.
Section 178.57-5 Material.
Section 178.57-6 Identification of material.
Section 178.57-7 Defects.
Section 178.57-8 Manufacture.
Section 178.57-9 Welding.
Section 178.57-10 Wall thickness.
Section 178.57-11 Heat treatment.
Section 178.57-12 Openings in cylinder.
Section 178.57-13 Pressure relief devices and pressure control valves.
Section 178.57-14 Pressure test.
Section 178.57-15 Physical test.
Section 178.57-16 Acceptable results for physical tests.
Section 178.57-17 Tests of welds.
Section 178.57-18 Radiographic examination.
Section 178.57-19 Rejected cylinders.
Section 178.57-20 Marking.
Section 178.57-21 Authorized materials of construction.
Section 178.57-22 Inspector's report.
Section 178.57-23 Report retention.
Section 178.58 Specification 4DA; inside containers, welded steel for aircraft use.
Section 178.58-1 Compliance.
Section 178.58-2 Type, size, and service pressure.
Section 178.58-3 Inspection by whom and where.
Section 178.58-4 Duties of inspector.
Section 178.58-5 Steel.
Section 178.58-6 Identification of material.
Section 178.58-7 Defects.
Section 178.58-8 Manufacture.
Section 178.58-9 Welding.
Section 178.58-10 Wall thickness.
Section 178.58-11 Heat treatment.
Section 178.58-12 Openings in container.
Section 178.58-13 Safety devices.
Section 178.58-14 Hydrostatic test.
Section 178.58-15 Burst test.
Section 178.58-16 Flattening test.
Section 178.58-17 Radiograhic inspection.
Section 178.58-18 Physical test and specimens for spheres and cylinders.
Section 178.58-19 Acceptable results for physical, flattening, and burst tests.
Section 178.58-20 Rejected cylinders.
Section 178.58-21 Marking.
Section 178.58-22 Size of marks.
Section 178.58-23 Inspector's report.
Section 178.58-24 Report retention.
Section 178.59 Specification 8; steel cylinders with approved porous filling for acetylene.
Section 178.59-1 Compliance.
Section 178.59-2 Type and service pressure.
Section 178.59-3 Inspection by whom and where.
Section 178.59-4 Steel.
Section 178.59-5 Identification of steel.
Section 178.59-6 Defects.
Section 178.59-7 Manufacture.
Section 178.59-8 Exposed bottom welds.
Section 178.59-9 Heat treatment.
Section 178.59-10 Openings.
Section 178.59-11 Safety devices and protection for valves, safety devices, and other connections.
Section 178.59-12 Hydrostatic test.
Section 178.59-13 Leakage test.
Section 178.59-14 Physical test.
Section 178.59-15 Rejected cylinders.
Section 178.59-16 Porous fillings.
Section 178.59-17 Tare weight.
Section 178.59-18 Marking.
Section 178.59-19 Size of marks.
Section 178.59-20 Inspector's report.
Section 178.59-21 Report retention.
Section 178.60 Specification 8AL; steel cylinders with approved porous filling for acetylene.
Section 178.60-1 Compliance.
Section 178.60-2 Type and service pressure.
Section 178.60-3 Inspection by whom and where.
Section 178.60-4 Authorized steel.
Section 178.60-5 Identification of steel.
Section 178.60-6 Defects.
Section 178.60-7 Manufacture.
Section 178.60-8 Footrings.
Section 178.60-9 Welding or brazing.
Section 178.60-10 Wall thickness; wall stress.
Section 178.60-11 Heat treatment.
Section 178.60-12 Openings.
Section 178.60-13 Safety devices and protection for valves, safety devices, and other connections.

You're viewing an archived copy from the New Jersey State Library.

Section 178.60-14 Hydrostatic test.
Section 178.60-15 Leakage test.
Section 178.60-16 Physical test.
Section 178.60-17 Elongation.
Section 178.60-18 Weld tests.
Section 178.60-19 Rejected cylinders.
Section 178.60-20 Porous filling.
Section 178.60-21 Tare weight.
Section 178.60-22 Marking.
Section 178.60-23 Size of marks.
Section 178.60-24 Inspector's report.
Section 178.60-25 Report retention.
Section 178.61 Specification 4BW; welded steel cylinders made of definitely prescribed steel with electric-arc welded longitudinal seam.
Section 178.61-1 Compliance.
Section 178.61-2 Type, size and service pressure.
Section 178.61-3 Inspection by whom and where.
Section 178.61-4 Duties of inspector.
Section 178.61-5 Authorized steel.
Section 178.61-6 Identification of material.
Section 178.61-7 Defects.
Section 178.61-8 Manufacture.
Section 178.61-9 Welding of attachments.
Section 178.61-10 Wall thickness.
Section 178.61-11 Heat treatment.
Section 178.61-12 Openings in cylinders.
Section 178.61-13 Safety relief devices and protection for valves, safety devices, and other connections, if applied.
Section 178.61-14 Hydrostatic test.
Section 178.61-15 Physical tests.
Section 178.61-16 Elongation.
Section 178.61-17 Tests of welds.
Section 178.61-18 Radiograhic examination.
Section 178.61-19 Rejected cylinders.
Section 178.61-20 Marking.
Section 178.61-21 Inspector's report.
Section 178.61-22 Report retention.
Section 178.65 Specification 39; non-reusable (non-refillable) cylinder.
Section 178.65-1 Compliance.
Section 178.65-2 Type, size, service pressure, and test pressure.
Section 178.65-3 Inspection by whom and where.
Section 178.65-4 Duties of inspector.
Section 178.65-5 Material; steel or aluminum.
Section 178.65-6 Manufacture.
Section 178.65-7 Wall thickness.
Section 178.65-9 Openings and attachments.
Section 178.65-10 Safety devices.
Section 178.65-11 Pressure tests.
Section 178.65-12 Flattening test.
Section 178.65-13 Rejected cylinders.
Section 178.65-14 Markings.
Section 178.65-15 Inspector's report.
Section 178.68 Specification 4E; welded aluminum cylinders.
Section 178.68-1 Compliance.
Section 178.68-2 Type, size and service pressure.
Section 178.68-3 Inspection by whom and where.
Section 178.68-4 Duties of inspector.
Section 178.68-5 Aluminum.
Section 178.68-6 Identification of material.
Section 178.68-7 Defects.
Section 178.68-8 Manufacture.
Section 178.68-9 Welding.
Section 178.68-10 Wall thickness.
Section 178.68-11 Opening in cylinder.
Section 178.68-12 Safety devices and protection for valves, safety devices, and other connections, if applied.
Section 178.68-13 Hydrostatic test.
Section 178.68-14 Flattening test.
Section 178.68-15 Physical test.
Section 178.68-16 Acceptable results for physical tests.
Section 178.68-17 Weld tests.
Section 178.68-18 Rejected cylinders.
Section 178.68-19 Marking.
Section 178.68-20 Inspector's report.
Section 178.68-21 Report retention.

Subpart H—Specifications for Portable Tanks

Section 178.245 Specification 51; steel portable tanks.
Section 178.245-1 Requirements for design and construction.
Section 178.245-2 Material.
Section 178.245-3 Design pressure.
Section 178.245-4 Tank mountings.
Section 178.245-5 Protection of valves and accessories.
Section 178.245-6 Name plate.
Section 178.245-7 Report.
Section 178.251 General design and construction requirements applicable to specifications 56 (Section 178.252) and 57 portable tanks (Section 178.253).
Section 178.251-1 General requirements.
Section 178.251-2 Materials of construction.
Section 178.251-3 General construction requirements.
Section 178.251-4 Stacking, mounting, and tie-down provisions.
Section 178.251-5 Testing.
Section 178.251-6 Rejected tanks.
Section 178.251-7 Identification and marking.
Section 178.252 Specification 56; metal portable tank.
Section 178.252-1 General requirements.
Section 178.252-2 Openings.
Section 178.252-3 Testing.
Section 178.253 Specification 57; metal portable tanks.
Section 178.253-1 General requirements.
Section 178.253-2 Openings.
Section 178.253-3 Protection of fittings.
Section 178.253-4 Vents.
Section 178.253-5 Testing.
Section 178.255 Specification 60; steel portable tanks.
Section 178.255-1 General requirements.
Section 178.255-2 Material.
Section 178.255-3 Expansion domes.
Section 178.255-4 Closure for manholes and domes.
Section 178.255-5 Bottom discharge outlets.
Section 178.255-6 Loading and unloading accessories.
Section 178.255-7 Protection of valves and accessories.
Section 178.255-8 Safety devices.
Section 178.255-9 Compartments.
Section 178.255-10 Lining.
Section 178.255-11 Tank mountings.
Section 178.255-12 Pressure test.
Section 178.255-13 Repair of tanks.
Section 178.255-14 Marking.
Section 178.255-15 Report.
Section 178.270 Specification IM 101 and IM 102 steel portable tanks; general design and construction requirements.
Section 178.270-1 Specification requirements for IM 101 and IM 102 steel portable tanks.
Section 178.270-2 General.
Section 178.270-3 Materials of construction.
Section 178.270-4 Structural integrity.
Section 178.270-5 Minimum thickness of shells and heads.
Section 178.270-6 Tank supports, frameworks and lifting attachments.
Section 178.270-7 Joints in tank shells.
Section 178.270-8 Protection of valves and accessories.
Section 178.270-9 Inspection openings.
Section 178.270-10 External design pressure.
Section 178.270-11 Pressure and vacuum relief devices.
Section 178.270-12 Valves, nozzles, piping, and gauging devices.
Section 178.270-13 Testing.

You're viewing an archived copy from the New Jersey State Library.

Section 178.270-14 Marking of tanks.
Section 178.271 Specification IM 101 steel portable tanks.
Section 178.271-1 General requirements.
Section 178.272 Specification IM 102 steel portable tanks.
Section 178.272-1 General requirements.
Section 178.272-2 Minimum thickness of shells and heads.

Subpart J—Specifications for Containers for Motor Vehicle Transportation

Section 178.315 Specification MC 200; containers for liquid nitroglycerin, desensitized liquid nitroglycerin or diethylene glycol dinitrate.
Section 178.315-1 Motor vehicle body.
Section 178.315-2 Body proper.
Section 178.315-3 Cellular construction.
Section 178.315-4 Inside containers and boots.
Section 178.315-5 Marking.
Section 178.318 Specification MC 201; container for detonators and percussion caps.
Section 178.318-1 Scope.
Section 178.318-2 Container.
Section 178.318-3 Cellular construction.
Section 178.318-4 Marking.
Section 178.337 Specification MC 331; cargo tank motor vehicle primarily for transportation of compressed gases as defined in Subpart G of Part 173 of this subchapter.
Section 178.337-1 General requirements.
Section 178.337-2 Material.
Section 178.337-3 Structural integrity.
Section 178.337-4 Joints.
Section 178.337-5 Bulkheads, baffles and ring stiffeners.
Section 178.337-6 Closure for manhole.
Section 178.337-7 Overturn protection.
Section 178.337-8 Outlets.
Section 178.337-9 Pressure relief devices, piping, valves, hoses, and fittings.
Section 178.337-10 Protection of fittings.
Section 178.337-11 Emergency discharge control.
Section 178.337-12 Shear section.
Section 178.337-13 Supporting and anchoring.
Section 178.337-14 Gauging devices.
Section 178.337-15 Pumps and compressors.
Section 178.337-16 Testing.
Section 178.337-17 Marking.
Section 178.337-18 Certification.
Section 178.338 Specification MC 338; insulated cargo tank.
Section 178.338-1 General requirements.
Section 178.338-2 Material.
Section 178.338-3 Structural integrity.
Section 178.338-4 Joints.
Section 178.338-5 Stiffening rings.
Section 178.338-6 Manholes.
Section 178.338-7 Openings.
Section 178.338-8 Pressure relief devices, piping, valves, and fittings.
Section 178.338-9 Holding time.
Section 178.338-10 Collision damage protection.
Section 178.338-11 Discharge control devices.
Section 178.338-12 Shear section.
Section 178.338-13 Supports and anchoring.
Section 178.338-14 Gauging devices.
Section 178.338-15 Cleanliness.
Section 178.338-16 Inspection and testing.
Section 178.338-17 Pumps and compressors.
Section 178.338-18 Marking.
Section 178.338-19 Certification.
Section 178.345 General design and construction requirements applicable to Specifications DOT 406 (Section 178.346), DOT 407 (Section 178.347), and DOT 412 (Section 178.348) cargo tank motor vehicles.
Section 178.345-1 General Requirements.
Section 178.345-2 Material and material thickness.
Section 178.345-3 Structural integrity.
Section 178.345-4 Joints.
Section 178.345-5 Manhole assemblies.
Section 178.345-6 Supports and anchoring.
Section 178.345-7 Circumferential reinforcements.
Section 178.345-8 Accident damage protection.
Section 178.345-9 Pumps, piping, hoses and connections.
Section 178.345-10 Pressure relief.
Section 178.345-11 Tank outlets.
Section 178.345-12 Gauging devices.
Section 178.345-13 Pressure and leakage tests.
Section 178.345-14 Marking.
Section 178.345-15 Certification.
Section 178.346 Specification DOT 406; cargo tank motor vehicle.
Section 178.346-1 General requirements.
Section 178.346-2 Material and thickness of material.
Section 178.346-3 Structural integrity.
Section 178.346-4 Joints.
Section 178.346-5 Manhole assemblies.
Section 178.346-6 Supports and anchoring.
Section 178.346-7 Circumferential reinforcements.
Section 178.346-8 Accident damage protection.
Section 178.346-9 Pumps, piping, hoses and connections.
Section 178.346-10 Pressure relief.
Section 178.346-11 Outlets.
Section 178.346-12 Gauging devices.
Section 178.346-13 Pressure and leakage tests.
Section 178.346-14 Marking.
Section 178.346-15 Certification.
Section 178.347 Specification DOT 407; cargo tank motor vehicle.
Section 178.347-1 General requirements.
Section 178.347-2 Material and thickness of material.
Section 178.347-3 Structural integrity.
Section 178.347-4 Joints.
Section 178.347-5 Manhole assemblies.
Section 178.347-6 Supports and anchoring.
Section 178.347-7 Circumferential reinforcements.
Section 178.347-8 Accident damage protection.
Section 178.347-9 Pumps, piping, hoses and connections.
Section 178.347-10 Pressure relief.
Section 178.347-11 Outlets.
Section 178.347-12 Gauging devices.
Section 178.347-13 Pressure and leakage tests.
Section 178.347-14 Marking.
Section 178.347-15 Certification.
Section 178.348 Specification DOT 412; cargo tank motor vehicle.
Section 178.348-1 General requirements.
Section 178.348-2 Material and thickness of material.
Section 178.348-3 Structural integrity.
Section 178.348-4 Joints.
Section 178.348-5 Manhole assemblies.
Section 178.348-6 Supports and anchoring.
Section 178.348-7 Circumferential reinforcements.
Section 178.348-8 Accident damage protection.
Section 178.348-9 Pumps, piping, hoses and connections.
Section 178.348-10 Pressure relief.
Section 178.348-11 Outlets.
Section 178.348-12 Gauging devices.
Section 178.348-13 Pressure and leakage tests.
Section 178.348-14 Marking.
Section 178.348-15 Certification.

Subpart K—Specifications for Packagings for Class 7 (Radioactive) Materials

Section 178.350 Specification 7A; general packaging, Type A.
Section 178.350-1 General requirements.
Section 178.350-2 Specific requirements.
Section 178.350-3 Marking.
Section 178.352 Specification 6L; metal packaging.
Section 178.352-1 General requirements.

You're viewing an archived copy from the New Jersey State Library.

Section 178.352-2 Rated capacity.
Section 178.352-3 General construction requirements.
Section 178.352-4 Welding.
Section 178.352-5 Closure.
Section 178.352-6 Markings.
Section 178.354 Specification 6M; metal packaging.
Section 178.354-1 General requirements.
Section 178.354-2 Rated capacity.
Section 178.354-3 General construction requirements.
Section 178.354-4 Closure.
Section 178.354-5 Markings.
Section 178.356 Specification 20PF phenolic-foam insulated, metal overpack.
Section 178.356-1 General requirements.
Section 178.356-2 Materials of construction and other requirements.
Section 178.356-3 Tests.
Section 178.356-4 Required markings.
Section 178.356-5 Typical assembly detail.
Section 178.358 Specification 21PF fire and shock resistant, phenolic-foam insulated, metal overpack.
Section 178.358-1 General requirements.
Section 178.358-2 Materials of construction and other requirements.
Section 178.358-3 Modification of specification 21PF-1 overpacks.
Section 178.358-4 Construction of specification 21-PF-1 overpacks.
Section 178.358-5 Required markings.
Section 178.358-6 Typical assembly detail.
Section 178.360 Specification 2R; inside containment vessel.
Section 178.360-1 General requirements.
Section 178.360-2 Manufacture.
Section 178.360-3 Dimensions.
Section 178.360-4 Closure devices.
Section 178.362 Specification 20WC wooden protective jacket.
Section 178.362-1 General requirements.
Section 178.362-2 Materials of construction.
Section 178.362-3 Closure.
Section 178.362-4 Tests.
Section 178.362-5 Painting.
Section 178.362-6 Marking.
Section 178.362-7 Typical assembly sketches.
Section 178.364 Specification 21WC wooden-steel protective overpack.
Section 178.364-1 General requirements.
Section 178.364-2 Materials of construction and other requirements.
Section 178.364-3 Closure.
Section 178.364-4 Tests.
Section 178.364-5 Required marking.
Section 178.364-6 Typical assembly detail.

PART 179—SPECIFICATIONS FOR TANK CARS

Subpart A—Introduction, Approvals and Reports

. . .

Section 179.3 Procedure for securing approval.
Section 179.4 Changes in specifications for tank cars.
Section 179.5 Certificate of construction.

. . .

Subpart B—General Design Requirements

. . .

Section 179.12 Interior heater systems.
Section 179.12-1 General.
Section 179.12-2 Materials and dimensions.
Section 179.12-3 Joints and fittings.
Section 179.12-4 Application to tank.
Section 179.12-5 Tests.
Section 179.12-6 Reports.
Section 179.12-7 Stenciling.

. . .

Subparts C—Specifications for Pressure Tank Car Tanks (Classes DOT—105, 109, 112, and 114)

Section 179.100 General specification applicable to pressure tank car tanks.
Section 179.100-1 Tanks built under these specifications shall comply with the requirements of §§179.100, 179.101 and when applicable, §§179.102, 179.103, and 179.104.
Section 179.100-2 Approval.
Section 179.100-3 Type.
Section 179.100-4 Insulation.
Section 179.100-5 Bursting pressure.
Section 179.100-6 Thickness of plates.
Section 179.100-7 Materials.
Section 179.100-8 Tank heads.
Section 179.100-9 Welding.
Section 179.100-10 Postweld heat treatment.
Section 179.100-11 Tank mounting.
Section 179.100-12 Manway nozzle, cover and protective housing.
Section 179.100-13 Venting, loading and unloading valves, measuring and sampling devices.
Section 179.100-14 Bottom outlets.
Section 179.100-15 Safety relief valves.
Section 179.100-16 Attachments.
Section 179.100-17 Closures for openings.
Section 179.100-18 Test of tanks.
Section 179.100-19 Tests of safety relief valves.
Section 179.100-20 Stamping.
Section 179.100-21 Stenciling.
Section 179.100-22 Certificate of construction.
Section 179.100-23 Alternative requirements for tank head puncture resistance systems.
Section 179.101 Individual specification requirements applicable to pressure tank cars.
Section 179.101-1 Individual specification requirements.
Section 179.102 Special commodity requirements for pressure tank car tanks.
Section 179.102-1 Carbon dioxide, refrigerated liquid.
Section 179.102-2 Chlorine.
Section 179.102-4 Vinyl fluoride, inhibited.
Section 179.102-5 to 179.102-16 (Removed.)
Section 179.102-17 Hydrogen chloride, refrigerated liquid.
Section 179.103 Special requirements for class 114A*** tank car tanks.
Section 179.103-1 Type.
Section 179.103-2 Manway cover.
Section 179.103-3 Venting, loading and unloading valves, measuring and sampling devices.
Section 179.103-4 Safety relief devices and pressure regulators.
Section 179.103-5 Bottom outlets.
Section 179.104 Special requirements for spec. 105 A200-F tank car tanks.
Section 179.104-1 Tanks built under these specifications must meet the requirements of §§179.100, and 179.101, and when applicable, §§179.102 and 179.104.
Section 179.104-2 Type.
Section 179.104-3 Tank mounting.
Section 179.104-4 Welding.
Section 179.105 Special requirements for Specifications 112 and 14 tank cars.
Section 179.105-1 General.
Section 179.105-4 Thermal protection.
Section 179.105-5 Tank head puncture resistance.
Section 179.105-7 Safety relief valves.
Section 179.105-8 Stenciling.

Subpart D—Specifications for Nonpressure Tank Car Tanks (Classes DOT—103, 104, 111AF, 111AW, and 115AW)

Section 179.200 General specifications applicable to non-pressure tank car tanks (Classes DOT—103, 104, and 111).

You're viewing an archived copy from the New Jersey State Library.

Section 179.200-1 Tanks built under these specifications must meet the requirements of §§179.200, 179.201 and when applicable §179.202.
Section 179.200-2 Approval.
Section 179.200-3 Type.
Section 179.200-4 Insulation.
Section 179.200-5 Bursting pressure.
Section 179.200-6 Thickness of plates.
Section 179.200-7 Materials.
Section 179.200-8 Tank heads.
Section 179.200-9 Compartment tanks.
Section 179.200-10 Welding.
Section 179.200-11 Postweld heat treatment.
Section 179.200-12 Tank mounting.
Section 179.200-13 Manway ring or flange, safety relief device flange, bottom outlet nozzle flange, bottom washout nozzle flange and other attachments and openings.
Section 179.200-14 Expansion capacity.
Section 179.200-15 Closures for manways.
Section 179.200-16 Gauging devices, top loading and unloading devices, venting and air inlet devices.
Section 179.200-17 Bottom outlets.
Section 179.200-18 Safety relief devices.
Section 179.200-19 Reinforcements, when used, and appurtenances not otherwise specified.
Section 179.200-20 Interior heater systems.
Section 179.200-21 Closures for openings.
Section 179.200-22 Test of tanks.
Section 179.200-23 Tests of safety relief devices.
Section 179.200-24 Stamping.
Section 179.200-25 Stenciling.
Section 179.200-26 Certificate of construction.
Section 179.200-27 Alternative requirements for tank head puncture resistance systems.
Section 179.201 Individual specification requirements applicable to non-pressure tank car tanks.
Section 179.201-1 Individual specification requirements.
Section 179.201-2 Minimum plate thickness.
Section 179.201-3 Lined tanks.
Section 179.201-4 Material.
Section 179.201-5 Postweld heat treatment and corrosion resistance.
Section 179.201-6 Manways and manway closures.
Section 179.201-7 Safety relief devices.
Section 179.201-8 Sampling device and thermometer well.
Section 179.201-9 Gauging device.
Section 179.201-10 Water capacity marking.
Section 179.201-11 Insulation.
Section 179.203 Special requirements for specification 111 tank cars.
Section 179.203-1 General.
Section 179.203-2 Previously built cars.
Section 179.203-3 Stenciling.
Section 179.220 General specifications applicable to non-pressure tank car tanks consisting of an inner container supported within an outer shell (class DOT—115).
Section 179.220-1 Tanks built under these specifications must meet the requirements §§179.220, 179.221, and 179.222.
Section 179.220-2 Approval.
Section 179.220-3 Type.
Section 179.220-4 Insulation.
Section 179.220-5 Bursting pressure.
Section 179.220-6 Thickness of plates.
Section 179.220-7 Materials.
Section 179.220-8 Tank heads.
Section 179.220-9 Compartment tanks.
Section 179.220-10 Welding.
Section 179.220-11 Postweld heat treatment.
Section 179.220-12 Tank mounting.
Section 179.220-13 Inner container manway nozzle and cover.
Section 179.220-14 Openings in the tank.
Section 179.220-15 Support system for inner container.
Section 179.220-16 Expansion capacity.
Section 179.220-17 Gauging devices, top loading and unloading devices, venting and air inlet devices.
Section 179.220-18 Bottom outlets.
Section 179.220-19 Safety relief devices.
Section 179.220-20 Reinforcements, when used, and appurtenances not otherwise specified.
Section 179.220-21 Interior heating system.
Section 179.220-22 Closure for openings.
Section 179.220-23 Test of tanks.
Section 179.220-24 Tests of safety relief valves.
Section 179.220-25 Stamping.
Section 179.220-26 Stenciling.
Section 179.220-27 Certificate of construction.
Section 179.221 Individual specification requirements applicable to tank car tanks consisting of an inner container supported within an outer shell.
Section 179.221-1 Individual specification requirements.
Section 179.222 Special commodity requirements for DOT—115A tank car tanks.
Section 179.222-1 Chloroprene.

Subpart E—Specifications for Multi-Unit Tank Car Tanks (Classes DOT—106A and 110AW)

Section 179.300 General specifications applicable to multi-unit tank car tanks designed to be removed from car structure for filling and emptying (classes DOT—106A and 110AW)
Section 179.300-1 Tanks built under these specifications shall meet the requirements of §179.300, §179.301 and when applicable, §179.302.
Section 179.300-2 Approval.
Section 179.300-3 Type and general requirements.
Section 179.300-4 Insulation.
Section 179.300-5 Bursting pressure.
Section 179.300-6 Thickness of plates.
Section 179.300-7 Materials.
Section 179.300-8 Tank heads.
Section 179.300-9 Welding.
Section 179.300-10 Postweld heat treatment.
Section 179.300-11 Tank mounting.
Section 179.300-12 Protection of fittings.
Section 179.300-13 Venting, loading and unloading valves.
Section 179.300-14 Attachments not otherwise specified.
Section 179.300-15 Safety relief devices.
Section 179.300-16 Tests of tanks.
Section 179.300-17 Tests of safety relief devices.
Section 179.300-18 Stamping.
Section 179.300-19 Inspection.
Section 179.300-20 Reports.

. . .

Subpart F—Specification for Cryogenic Liquid Tank Car Tanks and Seamless Steel Tanks (Classes DOT—113 and 107A).

Section 179.400 General specification applicable to cryogenic liquid tank car tanks.
Section 179.400-1 General.
Section 179.400-2 Approval.
Section 179.400-3 Type.
Section 179.400-4 Insulation system and performance standard.
Section 179.400-5 Materials.
Section 179.400-6 Bursting and buckling pressure.
Section 179.400-7 Tank heads.
Section 179.400-8 Thickness of plates.
Section 179.400-9 Stiffening rings.
Section 179.400-10 Sump of siphon bowl.
Section 179.400-11 Welding
Section 179.400-12 Postweld heat treatment.
Section 179.400-13 Support system for inner tank.

You're viewing an archived copy from the New Jersey State Library.

Section 179.400-14 Cleaning of inner tank.
Section 179.400-15 Radioscopy.
Section 179.400-16 Access to inner tank.
Section 179.400-17 Inner tank piping.
Section 179.400-18 Test of inner tank.
Section 179.400-19 Valves and gages.
Section 179.400-20 Pressure relief devices.
Section 179.400-21 Test of pressure relief valves.
Section 179.400-22 Protective housings.
Section 179.400-23 Operating instructions.
Section 179.400-24 Stamping.
Section 179.400-25 Stenciling.
Section 179.400-26 Certificate of construction.
Section 179.401 Individual specification requirements applicable to inner tanks for cyrogenic liquid tank car tanks.
Section 179.401-1 Individual specification requirements.
Section 179.500 Specification DOT—107A**** seamless steel tank car tanks.
Section 179.500-1 Tanks built under these specifications shall meet the requirements of §179.500.
Section 179.500-2 Approval.
Section 179.500-3 Type and general requirements.
Section 179.500-4 Thickness of wall.
Section 179.500-5 Material.
Section 179.500-6 Heat treatment.
Section 179.500-7 Physical tests.
Section 179.500-8 Openings in tanks.
Section 179.500-9 Tank mounting.
Section 179.500-10 Protective housing.
Section 179.500-11 Loading and unloading valves.
Section 179.500-12 Safety relief devices.
Section 179.500-13 Fixtures.
Section 179.500-14 Test of tanks.
Section 179.500-15 Handling of tanks failing in tests.
Section 179.500-16 Tests of safety relief devices.
Section 179.500-17 Marking.
Section 179.500-18 Inspection and reports.

PART 180—CONTINUING QUALIFICATION AND MAINTENANCE OF PACKAGINGS

. . .

Subpart E—Qualification and Maintenance of Cargo Tanks

. . .

Section 180.407 Requirements for test and inspection of specification cargo tanks.

. . .

(a)

DIVISION OF TRANSPORTATION ASSISTANCE
DIVISION OF TAXATION

Employee Trip Reduction Program Tax Credit

Adopted New Rules: N.J.A.C. 16:50-15

Proposed: February 7, 1994 at 26 N.J.R. 756(a).

Adopted: January 9, 1995 by W. Dennis Keck, Acting Assistant Commissioner for Planning and December 22, 1994 by Richard D. Gardiner, Director, Division of Taxation.

Filed: January 12, 1995 as R.1995 d.75, **without substantive and technical changes** not requiring additional public notice or comment (see N.J.A.C. 1:30-4.3).

Authority: N.J.S.A. 27:26A-1 to 14 (P.L. 1992, c.32 "New Jersey Traffic Congestion and Air Pollution Control Act"); N.J.S.A. 27:1A-6; Section 182(d)(1)(B) of the Clean Air Act Amendments (CAAA) of 1990 (42 U.S.C. Section 7511a(d)(1)(B); N.J.S.A. 27:26A-15 et seq. (P.L. 1993, c.150, approved June 24, 1993); and N.J.S.A. 54A:6-23 et seq. (P.L. 1993, c.108, approved April 16, 1993).

Effective Date: February 6, 1995.
Expiration Date: December 6, 1998.

Summary of Hearing Officer Recommendations and Agency Responses:

A public hearing was held on Thursday, February 24, 1994, from 1:00 P.M. to 4:00 P.M. in the Multi-Purpose Room at the New Jersey Department of Transportation. The hearing officer made no recommendations. The hearing record may be reviewed by contacting Renee Rapciewicz, Deputy Administrative Practice Officer, New Jersey Department of Transportation, CN 600, Trenton, NJ 08625.

Summary of Public Comments and Agency Responses:

Mr. Eli Cooper, Cross County Connection, commented in writing as follows:

N.J.A.C. 16:50-15.2 Requirements

COMMENT: Define waiver at N.J.A.C. 16:50-15.2(a)14 include "hardship" waiver or "good faith effort" waiver, and define what is meant by "substantial compliance."

RESPONSE: The Department will add "hardship" and "good faith" to N.J.A.C. 16:50-15.2(a)14 to clarify the term waiver as requested by Mr. Cooper. The Department has decided not to include a definition of "substantial compliance" because it is not the intent of the Department to predetermine the circumstances under which the Department, the ETRP Review Board, or the Commissioner could consider or approve waiver requests.

N.J.A.C. 16:50-15.3 Eligible expenses

COMMENT: Include as an eligible expense Transportation Management Association (TMA) membership fees. The purpose of a TMA is to promote alternative commute programs and assist employers with implementation of alternative commute strategies. The strategies and implementation techniques available to TMA members will serve as an integral component of an affected employer's Compliance Plan.

TMAs provide their members with the following services:

- Survey preparation and administration
- Survey processing and analysis
- Plan preparation
- Plan implementation
- ETC training
- Development of brochures and posters
- Organize and run transportation fairs
- Organize and run focus groups
- Provide promotional items

RESPONSE: If the TMA can itemize the employer's membership fee to identify that portion of the fee that is spent by the TMA to provide services or products that directly assist the employer in complying with the ETR mandate, then that portion of the fee would be eligible. Government subsidies for TMA activities are not eligible for tax credits.

COMMENT: The implementation of parking fees has proven to be a highly effective strategy to increase APO. To implement a successful parking management program, many employers, particularly in the suburbs, will have to reconfigure existing parking lots and install mechanical control and monitoring devices. Additionally, employers may need to close, relocate or build new access points, requiring permits from the appropriate governmental jurisdictions.

Expand the definitions of "cost" and "eligible expenses" to include the following costs associated with capital improvements necessary to implement an employer's ECO program:

- Municipal, county and state permitting fees
- Design costs
- Engineering costs
- Site preparation costs
- Construction costs

RESPONSE: These expenses, if directly related to construction, will be eligible when the capital improvement is completed and in operation. The definition of "cost" is changed to reflect the change sought by this comment. The Department has changed this definition to include these items because they are expenses typically eligible for reimbursement by the Department on capital improvement projects.

COMMENT: Concerning facilities/vehicle costs:

- The term "buspool" is referenced; however, there is no definition of this term in the proposed rule.

You're viewing an archived copy from the New Jersey State Library.

• Define "predominantly" as it relates to the use of teleworking equipment. Teleworking is typically used as a commute alternative one to two days per week.

• Include the costs of installing equipment at telework sites as an eligible expense.

• Eligible telework equipment should not be limited to what is listed in the proposed rule, since the unique characteristics of certain employers may require other types of equipment.

RESPONSE: Expenses for equipment that are paid for by the company and installed at a telework location to enable the employee to work at that location will be eligible. The Department has added a definition of "buspool" to N.J.A.C. 16:50-15.1, and has clarified the concept of "predominantly" at N.J.A.C. 16:50-15.3(a)2iv.

William J. Manning, Prudential Insurance Company, commented in writing as follows:

COMMENT: In the definition of "commuter transportation benefit," it states that the benefit shall include the costs of parking by employees at park-and-ride lots if used to benefit an employer's ECO program. Does this include parking at train stations or is there a more specific definition of park-and-ride lots?

RESPONSE: All those park-and-ride lots as made available at train stations, private or non-profit owned property or as listed with NJDOT are acceptable under N.J.A.C. 16:50-15.

COMMENT: In N.J.A.C. 16:50-15.2(a)4, the maximum yearly credit shall not be more than five percent of the amount spent per employee participating in the plan on eligible ECO expenses in 1994, up to a maximum credit of $36.00 per employee participating in an alternative means of commuting. For 1995 through 2004, the maximum yearly credit shall not be more than 10 percent of the amount spent per employee participating in the plan on eligible ECO expenses, up to a maximum credit of $72.00 per employee participating in an alternative means of commuting. How often does an individual employee need to participate in an alternative means of commuting for a company to be able to receive a tax credit for eligible ECO expenses.

RESPONSE: The rules do not specify the frequency of employee participation, but employers must demonstrate whether they have achieved the target for the typical week(s) reflected in the 1996/1997 surveys conducted pursuant to N.J.S.A. 16:50-7. The Department has included a definition of "participating employee" in the tax credit rule at N.J.A.C. 16:50-15.2(a)4.

COMMENT: In N.J.A.C. 16:50-15.3(a)3, "financial incentive costs" are direct expenditures provided by an employer to employees for alternative means of commuting. The term includes the cost of on-going or occasional subsidies—such as free/discounted transit passes, cash/parking/gas subsidies for ridesharers, van pool start up payments, and empty seat subsidies for van pools that are provided to employees as an incentive to increase the use of commute alternatives. Cash or in-kind gifts of greater than nominal value provided to employees, in change for their participation in alternative means of commuting pursuant to an ECO program, are also an eligible financial incentive cost.

• As part of a parking management program a company elects to:
—reduce available parking spaces at all affected sites by 10 percent;
—provide all employees who drive and park $50.00 per month; and
—charge all employees who drive, SOV or ride sharing, $60.00 per month to park.

The plan is to encourage ride sharing by enabling employees riding together to keep a larger portion for the $50.00 per month they receive for parking expenses.

• Is this expense eligible for the tax credit?

• If yes, how much of the expense is eligible?

• If no, why not?

RESPONSE: N.J.A.C. 16:50-15.2(a)(5) allows this expense, but the affected employer would reduce it by the amount of income received by them under the parking management program.

Jeffrey N. Jordan, Population Resource Center, commented in writing as follows:

COMMENT: Explain the basis for the various estimates of the impact on the State of New Jersey's tax revenue as a result of this tax credit.

RESPONSE: $7 million in lost revenues estimated from a sample of nationally successful ECO programs, projected to 25 percent of up to 1.7 million employees (6,000 worksites) at a cost of $200.00 per participating employee. Source: COMSIS Corporation, NJDOT Consultant, and NJDOT.

$25.8 million in lost revenues projected to 25 percent of 1.4 million employees (5,000 worksites) at a cost of the maximum allowed—$720.00 per participating employee. Source: N.J. Department of Treasury (Division of Taxation).

COMMENT: Explain the Federal government mandate that led to the ETR Program under which this tax credit will be offered, and the impact on the State of New Jersey were it to fail to implement same, such as loss of Federal clean water and highway construction funds.

RESPONSE: The 1990 Clean Air Act Amendments require states with areas with severe or extreme ozone pollution to adopt trip reduction programs. By 1996, these states must increase vehicle occupancy in ozone non-attainment areas. Eighteen of 21 New Jersey counties (except Atlantic, Cape May and Warren Counties) are affected. If the State of New Jersey becomes in violation of the CAAA, the result could be the loss of several hundred million dollars in Federal funding for highway and other infrastructure improvements including water quality projects.

COMMENT: Explain the benefits to be gained by the State of New Jersey for implementing the ETR Program, such as less cost for maintenance of highways and less air pollution due to fewer automobiles.

RESPONSE: By implementing the ETR Program, the State of New Jersey will benefit from an approximate three percent reduction in the amount of pollutants in the air. Also by reducing the frequency of automobile use, the State will benefit from less traffic congestion resulting in maintenance savings on its State and local roads and can encourage economic growth by managing transportation demand at peak periods. More significantly, fewer highway capacity increases may be needed saving construction costs of $5 to $40 million per mile of highway.

Michael C. Lefanto, CPA, New Jersey Society of Certified Public Accountants commented in writing as follows:

COMMENT: Regarding the definition of "affected employer" pursuant to N.J.A.C. 16:50-15.1, the definition includes a taxpayer of a partnership under the Gross Income Tax Act but does not include a taxpayer of a partnership in the Corporation Business tax. In other words, it would appear that the tax credits of a partnership flow through to an individual partner but not to a corporate partner. This result is inequitable.

RESPONSE: A corporation that is a partner in a partnership would receive an adjustment to its income in the same manner that it is received by an individual partner.

Since the corporate or individual partners are receiving a benefit by virtue of the adjustment to arrive at ordinary income of the partnership, no further flow through would be appropriate for the corporate partner. The definition of "affected employer" is amended upon adoption in order that benefits provided by these rules are available to those registered employers subject to any tax administered by the Division of Taxation.

COMMENT: Pursuant to N.J.A.C. 16:50-15.2(a)4ii, the benefits to a partnership begin for periods beginning on or after January 1, 1995. However, for other taxpayers, the credits begin in 1994. It would appear that partners in partnerships should obtain this benefit in 1994 as well.

RESPONSE: This provision is revised to show applicability in 1994.

COMMENT: Pursuant to N.J.A.C. 16:50-15.2(a)6, this provision is silent as to the applicability of the interaction with the other credits in New Jersey (for example, recycling credit; research and development credit; investment tax credit).

RESPONSE: The Employer Trip Reduction Program tax credit will be independent from all other credits. This is consistent with the originating legislation, and the last sentence of N.J.A.C. 16:50-15.2(a)6 is deleted in order to demonstrate this independence.

COMMENT: The regulations are silent as to the applicability of any carryover period of the credit (for example, for businesses in loss positions or with minimal income).

RESPONSE: A carryover of the Employer Trip Reduction Program tax credit will not be allowed, as it was not the expressed intention of the originating legislation to do so and may produce an undue burden on the State's revenue projections.

Robert V. Scolpino, County of Gloucester Planning Department, commented in writing as follows:

COMMENT: Information on the Employer Trip Reduction Program Tax Credit should be sent to all the employers with the Employer Trip Reduction Program Compliance package so that every employer will be aware of the tax incentives.

RESPONSE: Employers were informed of the proposed tax credit in the Guidance for Employers booklet sent as part of the Employer Trip Reduction Program compliance package. Further information will be provided when the proposed new rules for the tax credit is adopted into law.

You're viewing an archived copy from the New Jersey State Library.

The following comments were given at a February 24, 1994 public hearing:

COMMENT: Shannon Gibson, New Jersey Chamber of Commerce. The New Jersey Chamber of Commerce has been an active participant in the development of the ETRP regulations and believes strongly in the tax credit which will provide employers with an incentive to comply with the ETRP legislation. The Chamber hopes that the Department of Transportation will continue to respond as it has been to the concerns of its members and questions of employers trying to comply with the new legislation.

RESPONSE: The Department appreciates the Chambers' input with the ETRP legislation, especially its interest and support of the tax credit. The Department assures the Chamber that the Employer Trip Reduction Program staff are available for questions of concerned employers to help them comply with the ETRP rules and regulations.

COMMENT: Joe Thiel, New Jersey Division of Taxation. "I would like to make a recommendation for a technical change to [N.J.A.C.] 16:5-15.2[(a)6], basically deleting the last sentence that incorporates corporate business tax returns to tax liability, otherwise due to commuter is after the credit is taken pursuant to N.J.S.A. 52:27H-78 offering an enterprise zone employee tax credit. That language is no longer going to apply. We currently have seven tax credits and are going to be seeking technical amendments to change that."

RESPONSE: This proposed change is made to the adopted text.

COMMENT: Dawn Perrotta, New Jersey Business and Industry Association, commended both Senator Walter Rand and Assemblyman Alex DeCroce for sponsoring the tax credit legislation. The NJBIA believes that the tax credit will ease the financial expenses that the ETRP will impose on the employers in the State. The NJBIA also thanks the Department of Transportation for involving the business community and the NJBIA in the development of the ETRP rules.

NJBIA recommends one change to the ETRP tax regulations. It recommends that the words "or additional partnership deduction" be inserted after the word "credit" in N.J.A.C. 16:50-15.2(a)8, 9, 11 and 14 and wherever else it may be necessary.

RESPONSE: This clarifying change adding "or partnership deduction," is made upon adoption to the noted paragraphs.

COMMENT: Mary Stone, Employer Trip Reduction Program, commented that the word "be" should be deleted the first time it appears in sentence two of N.J.A.C. 16:50-15.2(a)11i.

RESPONSE: The corrective change is made to the adopted text.

Summary of Changes Upon Adoption:

This adoption has been prepared as a joint adoption with the Department of Transportation and Treasury. Once the Department of Transportation's ETR staff has reviewed employer plans to compare the program strategies to the plan summary costs and determines if the costs are appropriate, the Department of Treasury, Division of Taxation will be notified of the employer's eligibility to receive a tax credit up to a determined limit. This information may be used by Taxation as part of their review process when employer tax returns are filed.

Changes being made between the proposal and adoption are technical clarifications. They do not change who is affected by the rule, what is being prescribed, and do not impose an additional burden on those affected by the rule. The changes are summarized below.

A mistake and omission was made in the legal authority citation authorizing the proposed rulemaking activity. The mistake has been corrected and supplementary authority citations have been added to the heading of this notice.

Under N.J.A.C. 16:50-15.1, the wording **"or any other tax administered by the Division of Taxation"** has been added to the end of the "affected employer" definition for clarification in order that benefits provided by these rules are available to those registered employers subject to any tax administered by the Division of Taxation.

Clarification of participating employees for purposes of a tax credit has been added to N.J.A.C. 16:50-15.2(a)4 to acknowledge that a participating employee in 1994 means affected employees considered in the plan, and thereafter, from 1995 through 2004 those affected employees participating in a commute alternative, respectively. In addition, expenses not specific to an individual employee may be averaged over participating employees in all years.

The definition of "cost" has been changed to clarify that design and engineering costs and site preparation costs are eligible expenses, if directly related to construction, when the capital improvements are completed and in operation.

A definition of "buspool" has been provided per a commenter's request.

The term "NJDOT" has been changed to "State" at N.J.A.C. 16:50-15.2(a)3 and 15.5 to clarify that certain procedures are accomplished jointly by the Departments of Transportation and Treasury. In addition, the last sentence of N.J.A.C. 16:50-15.2(a)3 has been deleted so there is no misunderstanding that this process is a joint effort by the Departments of Transportation and Treasury.

N.J.A.C. 16:50-15.2(a)4ii has been changed to allow partners in partnerships to obtain benefits in 1994, as other taxpayers are entitled.

N.J.A.C. 16:50-15.2(a)6 has been changed as recommended by Joseph Thiel, Division of Taxation. The language "for corporate business tax returns, the tax liability otherwise due is computed after the credit is taken, pursuant to N.J.S.A. 52:27H-78 (urban enterprise zone employee tax credit)." has been removed since this language will no longer apply. Also, the reference to "subsection 13 of the subchapter" has been corrected to "the definition of 'affected employer' in N.J.A.C. 16:50-15.1."

The term "or partnership deduction" has been added after the word "credit" throughout the regulation as clarification.

At N.J.A.C. 16:50-15.2(a)11i, the word "be" has been deleted the first time it appears to correct a typographical error.

At N.J.A.C. 16:50-15.2(a)14, "hardship or good faith" has been added to waiver as a clarification.

Under N.J.A.C. 16:50-15.3(a)2iii, the Department has included the conversion or purchase of dual-powered vehicles as eligible expenses to receive credit. This addition illustrates an additional example of an eligible expense if it is predominantly used for a commute alternative.

At N.J.A.C. 16:50-15.3(a)2iv, the meaning of "predominantly used for a commute alternative" has been clarified as the purpose for the purchase or lease of equipment having to provide a participating employee with the opportunity to telework at least one day a week.

Executive Order No. 27 Statement

The adopted new rules provide the requirements for an employer to receive an Employee Trip Reduction Program tax credit and sets forth and defines eligible expenses towards the tax credit.

While the Federal government mandates that New Jersey implement an Employer Trip Reduction program, the Federal government does not mandate that states provide tax credits to employers who implement such programs. New Jersey has implemented tax credits to employers to provide economic incentives for the regulated party, and in this way implement a program in a business-friendly manner by the authority of N.J.S.A. 27:26A-15 et seq. and 54A:6-23 et seq.

Full text of the adoption follows (additions to proposal indicated in boldface with asterisks ***thus***; deletions from proposal indicated in brackets with asterisks *[thus]*):

SUBCHAPTER 15. EMPLOYER TRIP REDUCTION PROGRAM TAX CREDIT

16:50-15.1 Definitions

The following words and terms, as used in this subchapter, shall have the following meanings unless the context clearly indicates otherwise:

"Affected employer" means an employer that employs 100 or more employees as averaged over the immediately preceding 12 months period at any single work location in an affected area of New Jersey and is subject to the Employer Trip Reduction Program pursuant to this chapter. As used in this subchapter, an affected employer is a taxpayer subject to the provisions of any of the following: the Corporation Business Tax Act (1945), P.L.1945, c.162 (N.J.S.A. 54:10A-1 et seq.), the "Financial Business Tax Law (1946)," P.L.1946, c.174 (N.J.S.A. 54:10B-1 et seq.), the "Savings Institution Tax Act," P.L.1973, c.31 (N.J.S.A. 54:10D-1 et seq.), the tax imposed on marine insurance companies pursuant to N.J.S.A. 54:16-1 et seq., the tax imposed on fire insurance companies pursuant to N.J.S.A. 54:17-4 et al., the tax imposed on insurers generally, pursuant to P.L.1945, c.132 (N.J.S.A. 54:18A-1 et seq.), the public utility franchise tax, public utilities gross receipts tax and public utility excise tax imposed pursuant to P.L.1940, c.4, and P.L.1940, c.5 (N.J.S.A. 54:30A-16 et seq. and 54:30A-49 et seq.), or that is a taxpayer in respect of a distributive share of partnership

You're viewing an archived copy from the New Jersey State Library.

income under the "New Jersey Gross Income Tax Act," N.J.S.A. 54A:1-1 et seq ***or any other tax administered by the Division of Taxation***.

"Buspool" means and includes the operation of an autobus or autobuses, with a seating capacity of 16 or more persons, on a regular schedule between fixed termini, which provide service to a predetermined group of employees pursuant to a written contract between the employer or their designated agent and an authorized motorbus operator.

"Commuter transportation benefit" means the cost to employers of providing benefits to an employee for utilizing an alternative means of commuting and the cost of providing services and facilities which would encourage or facilitate use by employees of alternative meanings of commuting. The benefit shall include the costs of parking by employees at park-and-ride lots if used to benefit an employer's ECO program.

"Cost" means the invoice cost, purchase price, or contract amount of an eligible ECO expense, excluding interest on the debt of a capital improvement. The term does not, for example, include peripheral or indirect costs associated with the purchase, installation or construction of equipment, or the costs associated with the advertisement, solicitation of bids, and/or awarding of a contract. Ineligible costs include, but are not limited to, sales tax ***and****[,]* shipping costs*[, design and engineering costs, and site preparation costs]*.

"Eligible expense" means a direct expenditure made by an affected employer to provide commuter transportation benefits in support of its ECO program. The expenses must be outlined in the company's annual compliance plan and approved by the Department of Transportation (NJDOT) as eligible for the ECO tax credit. Categories of eligible expenses are identified in N.J.A.C. 16:50-15.3.

"Maximum yearly credit" means the maximum amount of the tax credit allowable in a tax year.

"NJDOT" means the New Jersey Department of Transportation.

"Plan" means the "compliance plan," "update plan," "revised plan" or "maintenance plan" an affected employer is required to submit to NJDOT in accordance with N.J.A.C. 16:50-8.

16:50-15.2 Requirements

(a) An affected employer incurring expenses to provide commuter transportation benefits in support of an ECO program is entitled to a business tax credit, subject to the following limitations:

1. The affected employer must register with NJDOT as an ETR participant prior to the date of filing a tax return claiming an ETR tax credit with the New Jersey Division of Taxation.

2. Expenses for which an affected employer plans to claim the tax credit must be outlined in the compliance plan required to be submitted to NJDOT in accordance with this chapter. Expenses which are not identified in the approved compliance plan may still be claimed for tax credit if they are submitted to NJDOT as part of a revised compliance plan (N.J.A.C. 16:50-8.2(a)6) prior to the date of filing of the tax return with the New Jersey Division of Taxation.

3. *[NJDOT]* ***The State*** may audit affected employers to ensure the eligibility of claimed expenses, upon 24 hours notice consistent with N.J.A.C. 16:50-12.1. The audit may address expenses identified in the original compliance plan as well as those subsequently submitted in a revised compliance plan. *[NJDOT will notify the New Jersey Division of Taxation of expenses that are ineligible in order that a claim for such expenses on a tax return is disallowed.]*

4. The maximum yearly credit shall not be more than five percent of the amount spent per employee participating in the plan on eligible ECO expenses in 1994, up to a maximum credit of $36.00 per employee participating in a commute alternative. ***Participating employees for purposes of receiving a tax credit in 1994 shall be defined as all affected employees considered in the plan, specifically those employees scheduled to report between 6:00 A.M. and 10:00 A.M. at their work site. Expenses not specific to an individual employee may be averaged over the number of participating employees.*** For 1995 through 2004, the maximum yearly credit shall not be more than 10 percent of the amount spent per employee participating in the plan on eligible ECO expenses, up to a maximum credit of $72.00 per employee participating in a commute alternative. ***Participating employees for purposes of receiving a tax credit in 1995 through 2004 shall be defined as all affected employees participating in a commute alternative. Expenses not specific to an individual employee may be averaged over the number of participating employees.***

i. These amounts will be adjusted annually for inflation based on the consumer price index for all urban consumers in the New York and Northeastern New Jersey, and the Philadelphia areas, as reported by the U.S. Department of Labor.

ii. In the case of a partnership receiving partnership income, a partnership shall not be allowed a credit under this section directly. ***For accounting and privilege periods beginning on or after January 1, 1994,*** *[A]* ***a*** partnership shall be entitled to reduce total partnership income distributed to the partners and subject to tax under NJSA 54A:5-1k by the lesser of 71.5 percent of the amount of commuter transportation benefits provided pursuant to law or $515.00 for each employee receiving such benefits. For accounting and privilege periods beginning on or after January 1, 1995, but ending no later than December 31, 2004, the reduction to partnership income allowed under this section shall be the lesser of 143 percent of the cost of commuter transportation benefits provided or $1,030 for each employee receiving such benefits for the relevant accounting or privilege period, as appropriate, subject to the other tax limitations identified in this chapter.

5. The cost shall be based on eligible expenses made for specific commuter transportation benefits or specific commute alternatives less the amount of revenue received as a direct result of the same specific benefit or alternative in an ECO program.

6. The credit allowable in a given tax year shall not exceed 50 percent of the tax liability otherwise due for any one of the taxes enumerated in *[subsection 13 of this subchapter. For corporate business tax returns, the tax liability otherwise due is computed after the credit is taken, pursuant to N.J.S.A. 52:27H-78 (urban enterprise zone employee tax credit)]* ***the definition of "affected employee" in N.J.A.C. 16:50-15.1***.

7. The amount of the tax credit shall not reduce the tax liability below the statutory minimum tax provided at N.J.S.A. 54:10A-5(d) and (e), 54:10B-3 and 54:10D-3.

8. The credit ***or partnership deduction*** shall not apply to accounting or privilege periods ending after December 31, 2004, and shall appear on the tax return as a cash basis or accrual basis credit ***or partnership deduction*** consistent with the basis currently used by the affected employer.

9. The enabling legislation permits both a tax credit ***or partnership deduction*** and an expense deduction, if the item is allowed as an expense deduction pursuant to applicable statutes and rules.

10. The affected employer shall file with NJDOT a "Plan Implementation Summary" listing the expenditures for which the affected employer has or will claim as an ETR tax credit. NJDOT will provide the Plan Implementation Summary to the New Jersey Division of Taxation.

11. All records relating to an ETR tax credit ***or partnership deduction*** claimed by an affected employer must be held by the affected employer for four years subsequent to the date of the filing on which such credit ***or partnership deduction*** is claimed. Examples of documentation required are payroll records, invoices, contracts, payment receipts, and leases.

i. Each employee who receives money towards commuter transportation benefits from the employer shall submit suitable proof to the employer in the form of receipts, ticket stubs, or the like, that the employee used those monies for a commute alternative. These records must *[be]* also be held by the affected employer for four years subsequent to the date of the filing on which such credit is claimed.

12. Affected employers incurring expenses which were not identified in the approved plan but which would be eligible for a tax credit must submit to NJDOT a revised plan outlining those ex-

You're viewing an archived copy from the New Jersey State Library.

penses. NJDOT may elect to audit the employer and its documentation to ensure the validity of the amended plan and the eligibility of claimed expenses.

13. An employer having liability for more than one of the taxes enumerated in the definition of "affected employer", at N.J.A.C. 16:50-15.1, shall proportionally allocate the credit to the liabilities. This shall be done by calculating the percentage that each liability bears to the total liabilities and apportioning the credit in the same percentage that the liability to which it is applied bears to the total liabilities.

14. A credit ***or partnership deduction*** shall be disallowed if the taxpayer fails to either meet the average passenger occupancy (APO) target as defined in N.J.A.C. 16:50-6 or fails to receive a ***hardship or good faith*** waiver from NJDOT pursuant to N.J.A.C. 16:50-13, within three years from the due date of the tax return reflecting a liability against which a credit ***or partnership deduction*** was claimed. If a company is not in substantial compliance, or did not receive a ***hardship or good faith*** waiver from NJDOT, then NJDOT shall notify the New Jersey Division of Taxation.

16:50-15.3 Eligible expenses

(a) Affected employers may wish to seek guidance from NJDOT regarding expenses that they expect to be eligible for tax credit prior to incurring those expenses. Eligible expenses fall into five categories, as follows:

1. "Administration costs" is the cost of personnel working directly on an ECO program. The eligible administration costs include only salary, benefits, and training (not overhead or indirect costs) for the ETC (100 percent if the ETC works full-time on ECO). Also included is a pro-rated percentage of the salary and benefits for other in-house staff working on ECO program planning, survey conduct or processing, plan preparation and/or implementation; and a prorated percentage of the salary and benefits for other staff used in support of the ECO, such as security and/or parking management personnel. The invoice cost to contract with outside agencies to provide these services would also be an eligible administration cost.

2. "Facilities/vehicle costs" is the invoice cost of capital improvements to add/upgrade facilities that support commute alternatives (for example, bike racks; showers and lockers; information display racks; transit signs and shelters; construction/maintenance costs for passenger loading facilities; parking management costs such as signing, striping, controlled access equipment, Smart Cards).

i. The term also includes purchase/lease and operating costs for vans or other vehicles registered to the affected employer and used for ridesharing, and for buses used for shuttles, buspools, etc.; and contracts with outside operators for the operation, administration, and/or management of buspools and/or express bus service.

ii. The conversion/purchase of AFV's is an eligible expense under this category.

iii. The conversion/purchase of dual-fuel vehicles is an eligible expense under this category.

*[iii.]***iv.*** The cost to purchase/lease and maintain teleworking equipment, including computers, fax machines, and telephones, is an eligible expense under this category if *[it is predominantly used for a commute alternative.]* ***the purpose for the purchase or lease of the equipment is to provide a participating employee with the opportunity to telework at least one day a week.*** This would apply to such improvements at a participating employee's residence or eligible off-site location.

3. "Financial incentive costs" are direct expenditures provided by an employer to employees for a commute alternative. The term includes the cost of on-going or occasional subsidies, such as free/discounted transit passes, cash/parking/gas subsidies for rideshares, vanpool start-up payments, and empty seat subsidies for vanpools, that are provided to employees as an incentive to increase the use of commute alternatives. Cash or in-kind gifts of greater than nominal value provided to employees, in exchange for their participation in a commute alternative pursuant to an ECO program, are also an eligible financial incentive cost.

4. "Marketing costs" are the supply and salary costs directly related to promotion of an ECO program. The term includes a prorated percentage of the salary and benefits (not overhead or indirect costs) for in-house staff who develop text/graphics for communications materials such as brochures and posters; the per-item cost of printing/copying such materials; and the invoice cost of promotional items provided to employees as part of ECO marketing. The invoice cost to contract with outside agencies to provide any or all of these services is also an eligible marketing cost.

5. "Other Program services costs" are expenses that NJDOT approves as eligible for the ETR tax credit, but that do not fit into the categories of administration, facilities/vehicles, financial incentives, or marketing. The term includes, but is not limited to, the cost of a Guaranteed Ride Home program with an outside vendor such as a taxi or rental car company; and the cost of providing or obtaining ridematching services (for example, purchasing POOLMATCH software and establishing a hookup to a regional ridesharing database).

16:50-15.4 Proof of registration

NJDOT will supply the New Jersey Division of Taxation with a list of all affected employers who have an approved plan, for purposes of determining whether an ETR tax credit may be claimed.

16:50-15.5 Appeals

An affected employer whose expenses are deemed not eligible by *[NJDOT]* ***the State*** for an ETR tax credit shall have the opportunity to appeal same in accordance with the procedures set forth in the New Jersey Administrative Procedure Act (NJAPA), N.J.S.A. 52:14B-1 et seq., and the Uniform Administrative Procedure Rules N.J.A.C. 1:1. An appeal shall be submitted to NJDOT in writing not later than 30 days after receipt of notification of the expenses having been deemed not eligible by *[NJDOT]* ***the State*** for an ETR tax credit.

(a)

AERONAUTICS AND FREIGHT SYSTEMS
DIVISION OF AERONAUTICS
Air Safety and Zoning
Readoption with Amendments: N.J.A.C. 16:62

Proposed: November 21, 1994 at 26 N.J.R. 4502(a).

Adopted: January 6, 1995 by W. Dennis Keck, Acting Assistant Commissioner for Planning.

Filed: January 12, 1995 as R.1995 d.76, **with technical change** not requiring additional public notice or comment (see N.J.A.C. 1:30-4.3).

Authority: N.J.S.A. 27:1A-5, 27:1A-6, 6:1-32 and the Air Safety and Zoning Act of 1983, P.L. 1983, c.260, as amended.

Effective Date: January 12, 1995, Readoption;
February 6, 1995, Amendments.

Expiration Date: January 12, 2000.

Summary of Public Comments and Agency Responses:

COMMENT: One comment was received by Mr. Richard F. Smith, Jr., Legislative Chairman, New Jersey Society of Professional Land Surveyors. Mr. Smith commented that only a licensed professional land surveyor may sign the site plans mentioned in N.J.A.C. 16:62-6.3(a)6. He also indicated that the inclusion of Engineer, Planner, and Architect in this section wrongly indicates that these professionals may prepare this map and determine the conclusions outlined within the section.

RESPONSE: N.J.A.C. 16:62-6.3(a)6 was modified to change the name of the "hazard area" to the "safety zone." No other change was made to this section and it remains as it has always been.

N.J.A.C. 16:62-6.3(a)6 requires that when site plans, specifications and construction drawings are submitted, they must bear the raised seal of a New Jersey licensed Professional Engineer, Professional Planner, Land Surveyor or Architect. The use of the disjunctive "or" in this section is to indicate that any or all of these professions may be involved in some or all of the steps required to prepare site plans.

For example, it is proper for an architect to transfer survey information to a site plan if he or she duly notes the date of the survey, by whom the survey was made, for whom it was made, and includes a signed and

You're viewing an archived copy from the New Jersey State Library.

sealed copy of the survey when the site plan is submitted. However, the site plan itself must be dated, signed and sealed by the architect when it is submitted for review.

While this regulation recognizes that these disciplines, while distinct, oft times act in concert, each possible combination cannot be addressed herein. Further, it is not the purpose of this regulation to determine the limits of professional practice of any given discipline. The intent is, rather, to make clear that materials provided by any or all of these professionals must be sealed. It is expected that the appropriate professional in each aspect of the final submission will know and fulfill his or her professional responsibilities.

However, the words "as appropriate" have been added to N.J.A.C. 16:62-6.3(a)6 to further clarify the intent of the regulation.

Executive Order No. 27 Statement

An Executive Order No. 27 analysis is not required because the requirements of this rulemaking are dictated by State statutes and are not subject to any Federal requirements or standards.

Full text of the readoption can be found in the New Jersey Administrative Code at N.J.A.C. 16:62.

Full text of the adoption follows (additions to proposal indicated in boldface with asterisks ***thus***):

SUBCHAPTER 1. AIR SAFETY AND ZONING

16:62-1.1 Definitions

The following words and terms, when used in this chapter, shall have the following meanings, unless the context clearly indicates otherwise:

. . .

"Airport" means any area of land or water, or both, designed and set aside for the landing and taking-off of fixed wing aircraft, utilized or to be utilized by the general public for such purposes, publicly or privately owned, and licensed by the Commissioner as a public use airport or landing strip, or a proposed facility for which an application for a license has been submitted in complete form pursuant to N.J.A.C. 16:54 and which has been determined by the Commissioner as likely to be so licensed within one year of the determination.

"Airport hazard" means:

1. Any use of land or water, or both, which creates a dangerous condition for persons or property in or about an airport or aircraft during landing or taking-off at an airport; or

2. Any structure or tree which obstructs the airspace required for the flight of aircraft in landing or taking-off at an airport.

"Airport safety zone" means any area of land or water, or both, upon which an airport hazard might be created or established, if not prevented by this chapter.

. . .

"Tree" means an object of natural vegetative growth.

. . .

16:62-1.2 General requirements and provisions

(a) Under the Air Safety and Zoning Act of 1983, as amended, this chapter establishes minimum standards for the control of airport and aeronautical hazards, and standards for land use adjacent to airports, which the municipalities of this State shall implement. These standards are minimum State standards, and municipalities may adopt more rigorous standards for control of the areas and condition under the provisions of the Municipal Land Use Law. The Commissioner may adopt under N.J.A.C. 16:62-7 a special or amended standard for an airport when it is determined that local conditions require it.

(b) No person shall build, rebuild, create or cause to be built, rebuilt or created any object or structure, or plant, or cause to be planted or permit to grow any tree or vegetation, which will interfere with, diminish, change or obstruct the airspace or landing and take-off area available for the landing and take-off of aircraft at airports covered under this chapter.

(c) (No change.)

(d) Municipalities of this State are required to implement and maintain land use ordinances in accordance with the provisions of this chapter. These ordinances are subject to review by the Commissioner.

(e) (No change.)

(f) Airport safety zones adjacent to airports not licensed by the State of New Jersey or airports which are located within the Port of New York District as defined in N.J.S.A. 32:1-3 are not subject to the specific provisions of this chapter. Although the specific provisions of this chapter may not apply to areas surrounding non-State licensed airports open to the public, this in no way limits the power of municipalities to enact substantially similar ordinances governing the areas in accordance with the purposes of the Municipal Land Use Law.

(g) All persons are hereby put on notice that the standards of this chapter are minimum Statewide standards. Implementations of these standards does not necessarily guarantee a prudent and comprehensive land use and safety program suitable for all airports.

(h) The mechanisms provided for control of aeronautical hazards within the "Air Safety and Zoning Act" rely substantially upon local zoning regulations. The powers to enact traditional zoning ordinances upon navigable waters are constrained; and the operational characteristics and jurisdictions of water facilities may differ substantially from many land facilities; the provisions of this chapter do not apply to seaplane or water facilities unless otherwise provided for by the Commissioner in N.J.A.C. 16:62-7.1. Any interested person may petition the Commissioner for review of Air Safety and Zoning issues under the operation of any Public Use Seaplane Facility.

Recodify existing (j)-(m) as (i)-(l) (No change in text.)

(m) This chapter shall not apply to:

1. Any person who has submitted a complete application, as defined and required by the Municipal Land Use Law, N.J.S.A. 40:55D-1 et seq., for approval of the proposed development as of April 15, 1985 or as of May 15, 1989 for commercial and industrial development proposed to be located in the clear zone.

2. Any person immune to local ordinance, whose proposed development has progressed beyond the preliminary engineering stage, as of April 15, 1985 or as of May 15, 1989 for commercial and industrial development proposed to be located in the clear zone.

16:62-2.1 Municipal requirements

(a) Each municipality which contains within its boundaries any part of a delineated airport safety zone, as defined by N.J.A.C. 16:62-3.1, shall enact an ordinance or ordinances incorporating the standards promulgated under this chapter. These standards shall also become a part of the masterplan of development for each affected municipality which has a masterplan.

(b) Each municipality affected under this chapter shall transmit to the Division at time of adoption, amendment, or when requested, a valid copy of the ordinance(s) and a local development masterplan shall be transmitted to the following address:

New Jersey Department of Transportation
Division of Aeronautics
Air Safety and Zoning Permits
1035 Parkway Avenue
CN 610
Trenton, New Jersey 08625

(c)-(e) (No change.)

SUBCHAPTER 3. DELINEATION OF AIRPORT SAFETY ZONES

16:62-3.1 Delineation of Airport Safety Zones

(a) This subchapter describes the methodology to be used in delineating Airport Safety Zones.

(b) (No change.)

16:62-3.2 Methodology used to delineate Airport Safety Zones

(a) An Airport Safety Zone shall be established for each runway at an airport.

(b) Each Airport Safety Zone shall consist of a RUNWAY SUBZONE, two RUNWAY END SUBZONES and two CLEAR ZONES.

You're viewing an archived copy from the New Jersey State Library.

(c) The overall Airport Safety Zone for an airport is geometrically constructed by defining and locating the RUNWAY SUBZONE and RUNWAY END SUBZONES for each runway open to the public on an airport open to the public. The outermost borders of the subzones comprise the outermost boundary of the Airport Safety Zone. The area within those outermost boundaries is that area regulated by the provisions of this chapter.

(d) The methodology used to delineate the overall construction and outermost boundaries of the Airport Safety Zone for an airport is further graphically depicted in Figure 3.

16:62-3.3 Delineation of the RUNWAY SUBZONE

(a) The RUNWAY SUBZONE of an Airport Safety Zone shall consist of a rectangle having the same centerline and length as the runway, unless a shorter length is necessitated by limited property ownership at the airport.

(b)-(c) (No change.)

(d) The methodology used to delineate the RUNWAY SUBZONE of an Airport Safety Zone is illustrated in Figure 1.

16:62-3.4 Delineation of the RUNWAY END SUBZONES

(a) The RUNWAY END SUBZONES of an Airport Safety Zone shall consist of trapezoids located at either end of the RUNWAY SUBZONE along the flight approach and departure path.

(b)-(c) (No change.)

(d) The methodology used to delineate the RUNWAY END SUBZONE of an Airport Safety Zone is illustrated in Figure 2.

16:62-3.5 Delineation of the CLEAR ZONES

(a) The CLEAR ZONES of an Airport Safety Zone shall consist of trapezoids located within the RUNWAY END SUBZONE along the flight approach and departure path.

(b)-(c) (No change.)

(d) The methodology used to delineate the CLEAR ZONE of an Airport Safety Zone is illustrated in Figure 7.

16:62-4.1 Minimum obstruction ordinance standards

(a) This subchapter defines the minimum obstruction ordinance standards which a municipality must enact pursuant to the provisions of this chapter, and describes the methodology used to define vertical development allowed within an Airport Safety Zone.

(b) (No change.)

16:62-4.2 Methodology used to define vertical development allowed within an Airport Safety Zone

(a) Minimum obstruction ordinance standards establish the vertical limits up to which structures or trees may be allowed to be developed or grow.

(b) Minimum obstruction ordinance standards are vertical standards measured in respect to elevations whose datum is the horizontal plane established by runway elevations. For example, if a point in an Airport Safety Zone permits at a specific point development up to "X" feet, that means "X" feet above the runway horizontal plane and not "X" feet above the natural grade of the land at that point in the Airport Safety Zone. This provision is further graphically depicted in Figure 4.

(c) The vertical standards within the RUNWAY SUBZONE of an Airport Safety Zone are determined first by establishing the elevations at the runway centerlines at the ends of the RUNWAY SUBZONE. From those elevations at the RUNWAY SUBZONE ends, a line is run 90 degrees outward from each side of the runway centerline for a distance of 125 feet. Within the area defined by these four points, no development is allowed above the natural grade of the soil except for runway and flight safety equipment.

1. The vertical standards within the remainder of the RUNWAY SUBZONE of an Airport Safety Zone are determined by establishing planes from the edges of the longitudinal 0 foot development restriction line established in N.J.A.C. 16:62-4.2c which slope upward and outward at a rate of seven feet horizontally to one foot vertically. This upward plane ceases when it reaches the outer longitudinal borders of the RUNWAY SUBZONE of any Airport Safety Zone at the elevation of 150 feet above its starting point at the longitudinal zero foot development line.

2. The methodology used to establish the vertical standards within the RUNWAY SUBZONE of an Airport Safety Zone is further graphically depicted in Figure 5.

(d) The vertical standards within the RUNWAY ENDS SUBZONE of an Airport Safety Zone are determined by first establishing a plane with a rising slope of one foot upward to 20 feet outward from the end of the RUNWAY SUBZONE to the outermost end of the RUNWAY END SUBZONE. This plane is bisected by the extended runway centerline and is 250 feet in total width at its innermost dimension and widens uniformly along its 3,000 feet length so as to have a total width of 850 feet at its outermost dimension where it intersects with the outermost portion of the RUNWAY END SUBZONE at the elevation of 150 feet above its starting point at the zero foot development line.

1. The vertical standards within the remainder of the RUNWAY END SUBZONE of an Airport Safety Zone are determined by establishing sloping planes from the outermost longitudinal edges of the plane established in (d) above. These planes rise upward at a rate of one foot upward to seven feet outward from the plane established in (d) above to where they meet the outermost longitudinal boundaries of the RUNWAY END SUBZONE at the elevation of 150 feet.

i. The methodology used to establish the vertical standards with the RUNWAY END SUBZONE of an Airport Safety Zone is further graphically depicted in Figure 6.

16:62-5.1 Minimum land use standards

(a) Within the safety zones delineated in N.J.A.C. 16:62-3.1, each municipality shall implement under N.J.A.C. 16:62-2.1, ordinances which implement the following standards for land use around airports. Prohibited land uses are specifically prohibited without the written approval of the Commissioner. Prohibited land uses may be allowed by the Commissioner on airport property when they are determined necessary by the Director for air commerce purposes or for the operation of the airport and its vendors directly serving air commerce needs. An example of this is a flight school.

1.-2. (No change.)

(b) (No change.)

(c) Municipalities shall, when developing land use ordinances to conform with the provisions of this chapter, adopt general land use provisions within the ordinance to minimize unwarranted concentrations of persons within Airport Safety Zones, especially along the extended runway centerlines within RUNWAY END SUBZONES.

SUBCHAPTER 6. PERMIT FOR CREATION OR EXPANSION OF A PROHIBITED LAND USE OR VERTICAL HEIGHT DEVELOPMENT WITHIN AN AIRPORT SAFETY ZONE

16:62-6.1 General provisions

(a) The Commissioner may issue a permit for creation or establishment of a nonconforming use or vertical height development within an airport safety zone upon determination that:

1.-4. (No change.)

(b)-(d) (No change.)

16:62-6.2 Municipal approval

(a)-(b) (No change.)

(c) Any person proposing to create or establish a prohibited land use or vertical height development in a designated airport safety zone not subject to municipal ordinances established in accordance with the Municipal Land Use Law (N.J.S.A. 40:55D), shall present the proposed development to the municipal governing body, which shall be considered the municipal agency for purposes of these rules.

16:62-6.3 Permit application requirements

(a) To be considered complete, an application for a permit for creation of a prohibited land use or vertical height development within an airport safety zone must include the following:

1. A completed permit application form;

2.-5 (No change.)

You're viewing an archived copy from the New Jersey State Library.

6. Submission of site plans, specifications and construction drawings detailing the substance of the proposed development for which a permit is sought. Site plans shall bear the raised seal of a New Jersey licensed Professional Engineer, Professional Planner, Land Surveyor, or Architect***, as appropriate,***and shall show the location of property lines, the location of runways, the boundaries of the airport safety zone, and elevations of proposed development showing where and by what amount the development exceeds the minimum standards for vertical development adopted under this chapter; and

7. (No change.)

(b) Applications for permits issued under the provisions of this chapter and correspondence to the Department relating to the provisions of this chapter should be forwarded to the following address:

New Jersey Department of Transportation
Division of Aeronautics
Air Safety and Zoning Permits
1035 Parkway Avenue
CN 610
Trenton, New Jersey 08625

16:62-7.1 General provisions

(a) Under Section 5 of the Air Safety and Zoning Act of 1983, the Commissioner may, notwithstanding any other provisions of this chapter, adopt an amended or special standard for an airport when he determines that local conditions require it. Those standards shall be adopted under the Administrative Procedure Act, N.J.S.A. 52:14B-1 et seq.

16:62-8.1 General provisions

(a) In the event of a proposed development within an Airport Safety Zone which is immune to local ordinance, the standards of this chapter still apply to such proposed development.

(b) Any persons proposing a development immune to local ordinance within an Airport Safety Zone shall make application to the Department in accordance with N.J.A.C. 16:62-6.1 and 16:62-6.3. The requirement for local approval under N.J.A.C. 16:62-6.2 and 6.3(a)2 is waived, and the permit application fee under N.J.A.C. 16:62-6.3(a)5 is waived.

(c) (No change.)

16:62-10.1 General provisions

(a) Municipalities affected by the provisions of this chapter shall implement the standards of this chapter as of April 15, 1985, or in the case of clear zones, May 15, 1989.

(b) No municipal body may grant variances or subdivisions in an Airport Safety Zone under their existing ordinances whose purpose would be contrary to the standards of this chapter.

You're viewing an archived copy from the New Jersey State Library.

FIGURE 1.

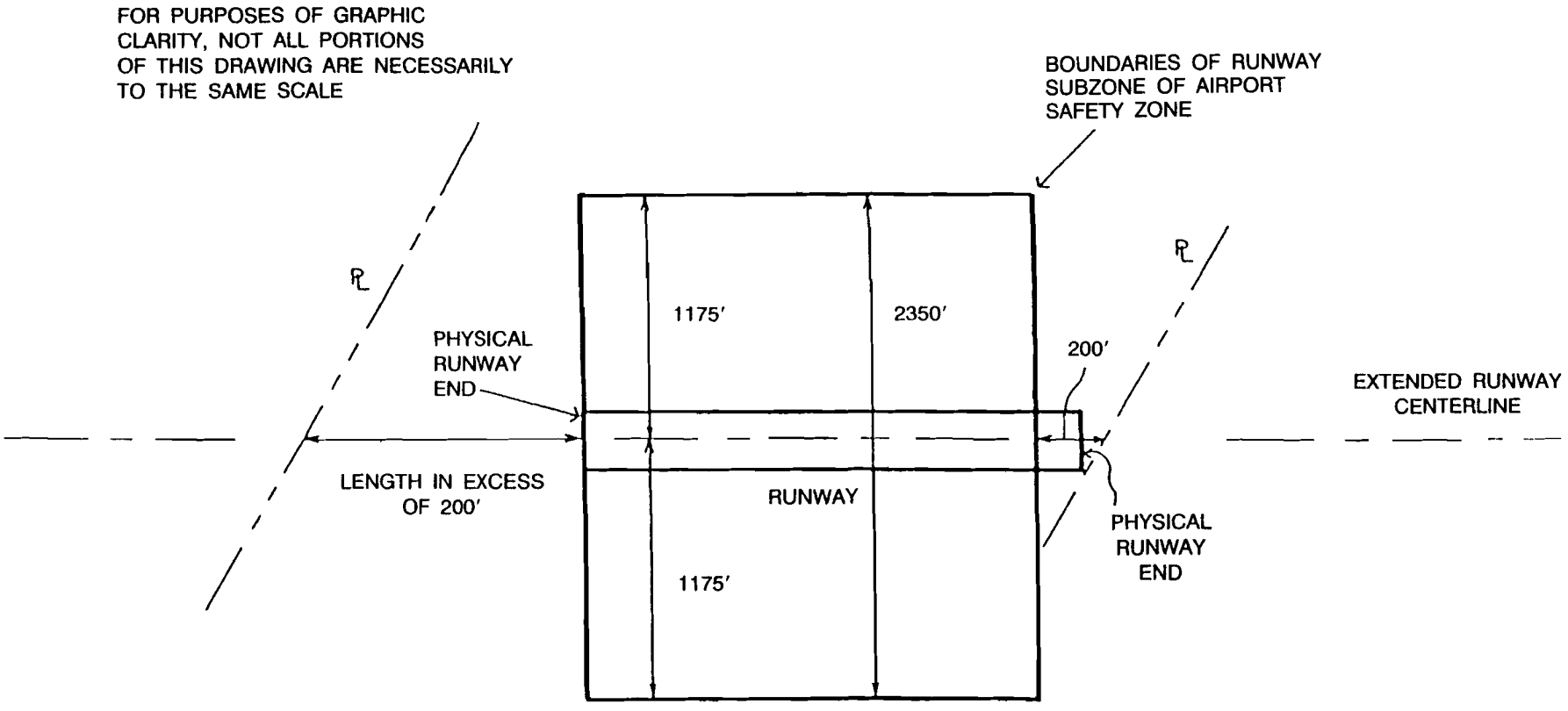

GRAPHIC DEPICTION OF THE GENERAL CONSTRUCTION OF THE RUNWAY SUBZONE OF AN AIRPORT SAFETY ZONE

You're viewing an archived copy from the New Jersey State Library.

FIGURE 2.

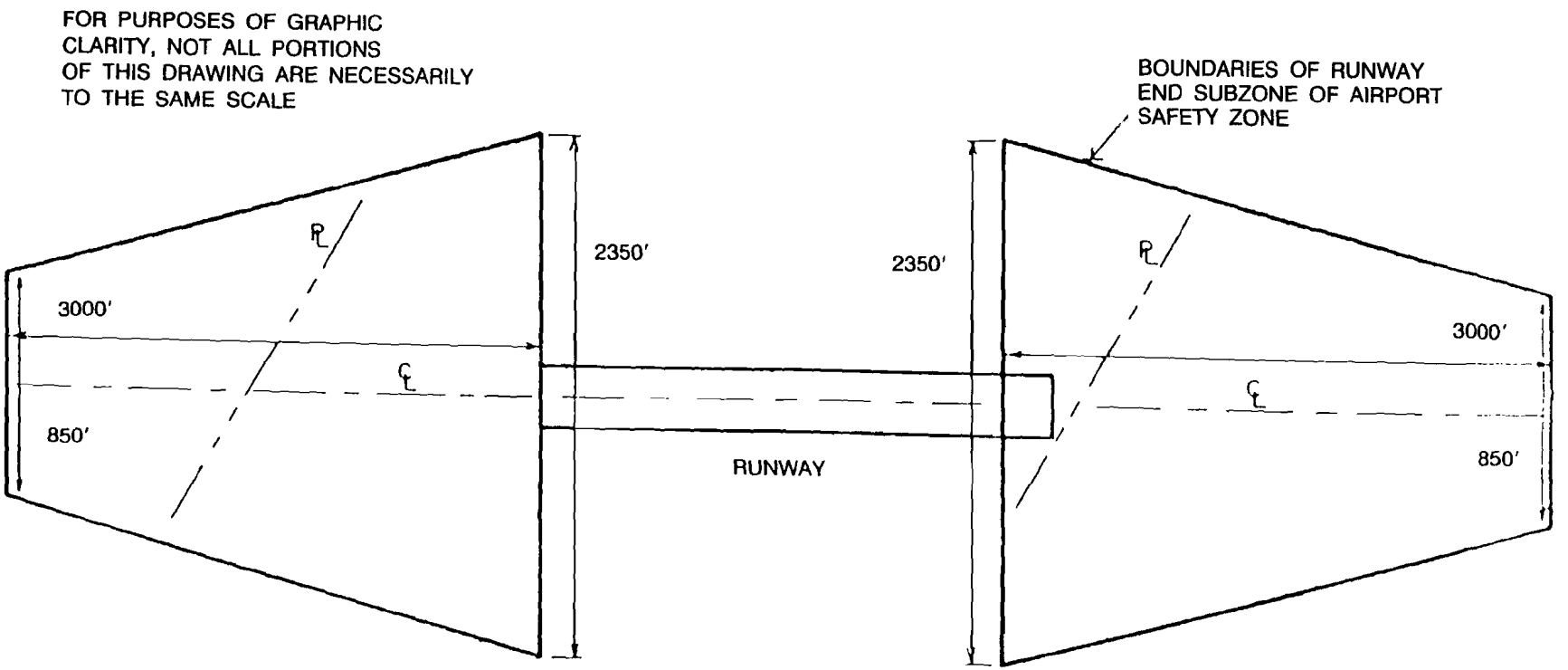

GRAPHIC DEPICTION OF THE GENERAL CONSTRUCTION OF THE RUNWAY END SUBZONE(S) OF AN AIRPORT SAFETY ZONE

You're viewing an archived copy from the New Jersey State Library.

FIGURE 3.

FOR PURPOSES OF GRAPHIC CLARITY, NOT ALL PORTIONS OF THIS DRAWING ARE NECESSARILY TO THE SAME SCALE

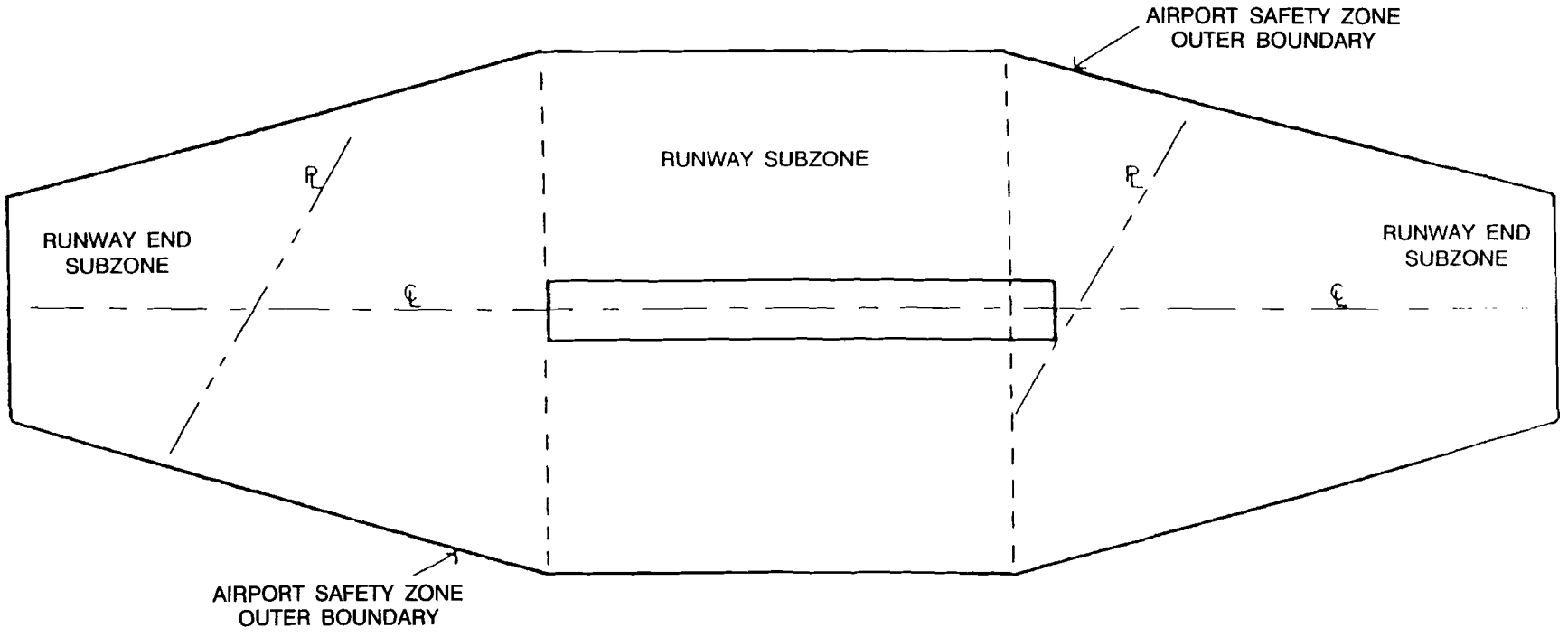

GRAPHIC DEPICTION OF THE GENERAL OVERALL CONSTRUCTION AND OUTERMOST BOUNDARIES OF AN AIRPORT SAFETY ZONE

You're viewing an archived copy from the New Jersey State Library.

FIGURE 4. (No change.)

FIGURE 5.

VERTICAL AND HORIZONTAL PLANES OF RUNWAY
SUBZONE OF AIRPORT SAFETY ZONE

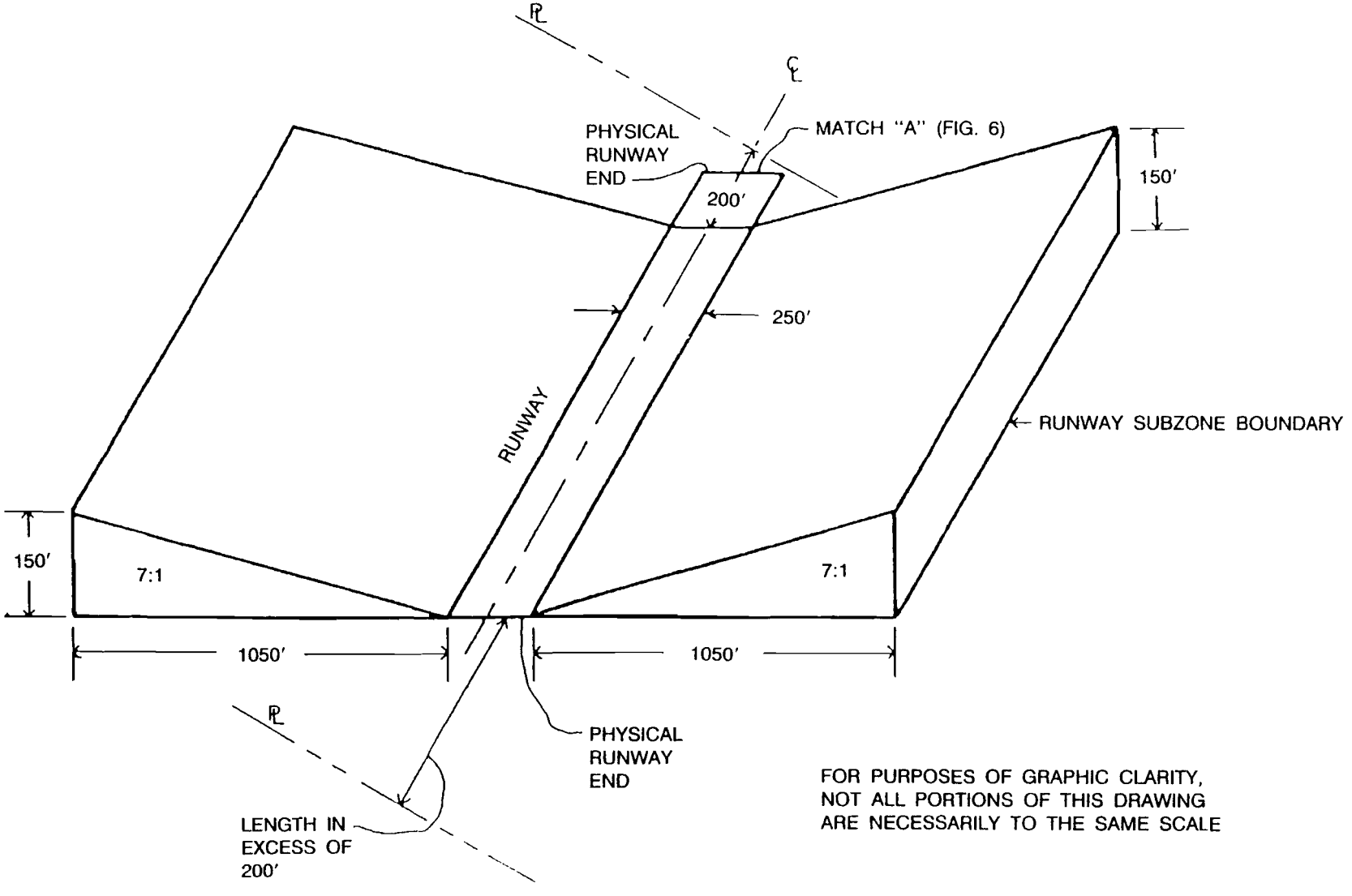

FOR PURPOSES OF GRAPHIC CLARITY,
NOT ALL PORTIONS OF THIS DRAWING
ARE NECESSARILY TO THE SAME SCALE

You're viewing an archived copy from the New Jersey State Library.

FIGURE 6.

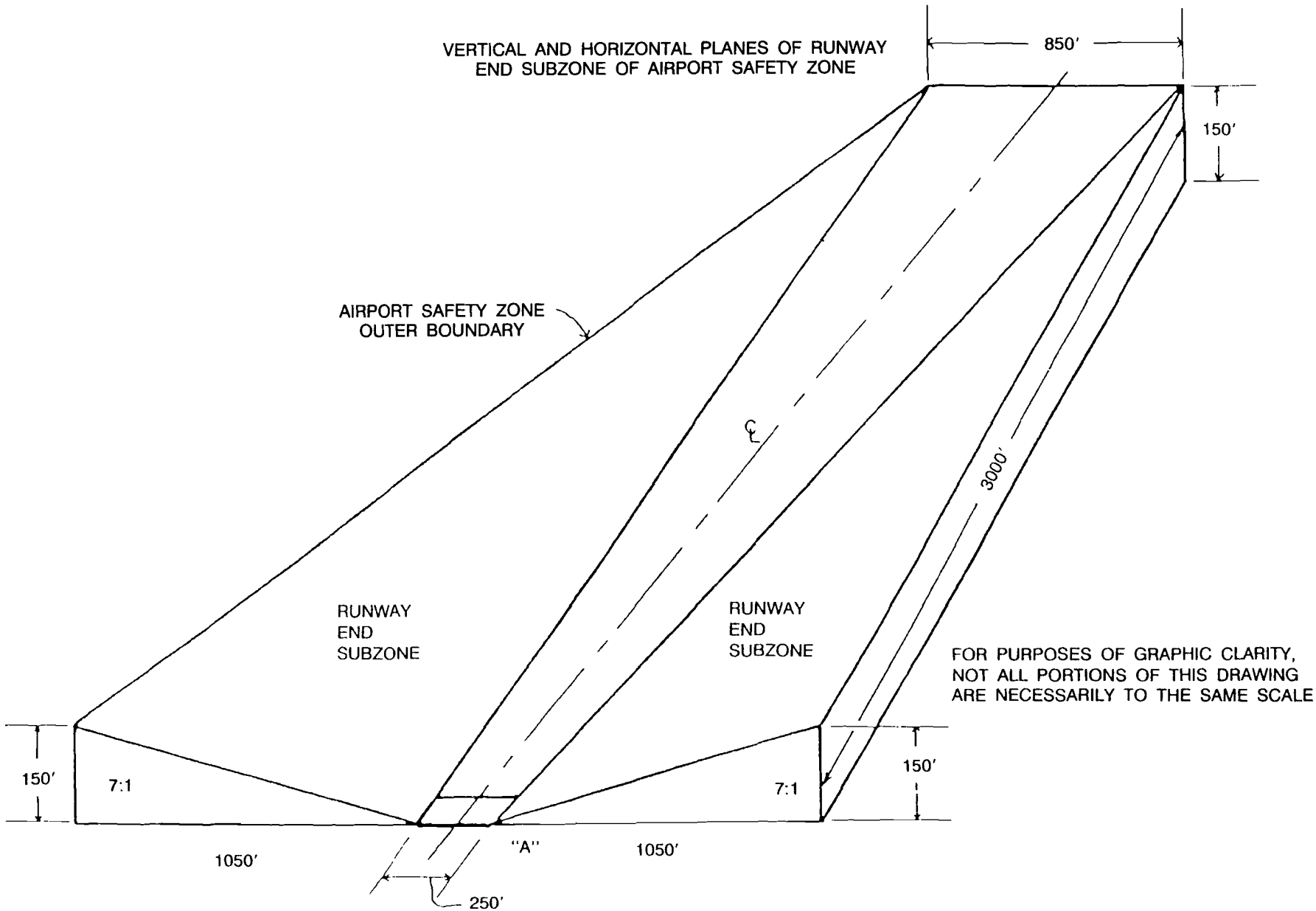

You're viewing an archived copy from the New Jersey State Library.

FIGURE 7.

FOR PURPOSES OF GRAPHIC CLARITY, NOT ALL PORTIONS OF THIS DRAWING ARE NECESSARILY TO THE SAME SCALE

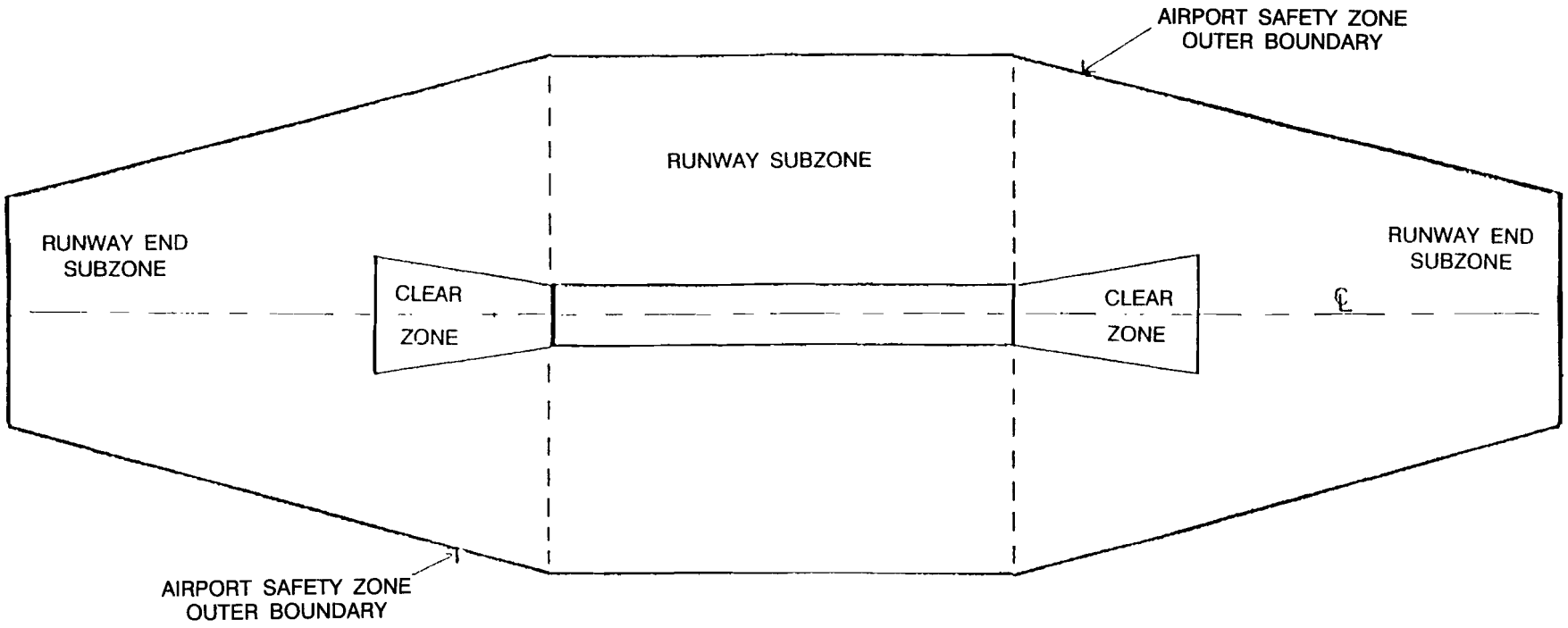

GRAPHIC DEPICTION OF THE CLEAR ZONE DIMENSIONS:

INNER WIDTH	250 FEET
OUTER WIDTH	450 FEET
LENGTH	1,000 FEET

You're viewing an archived copy from the New Jersey State Library.

TREASURY-TAXATION

(a)

DIVISION OF TAXATION

Motor Fuels Tax
Motor Fuels Retail Sales

Adopted Amendments: N.J.A.C. 18:18-1.1, 2.1, 2.4, 2.5, 2.6, 2.7, 2.8, 2.10, 3.1 through 3.19, 4.1 through 4.10, 5.1, 5.3, 5.4, 5.6, 5.7, 5.8, 6.1, 6.2, 6.3, 7.1, 7.2, 7.4, 7.5, 7.8, 7.9, 7.11, 8.1 through 8.9, 8.19, 9.1, 9.2, 9.3, 10.1, 11.1, 11.2, 11.3, 12.1, 12.2, 12.3, 12.4, 12.6, 12.8, 12.10, 13.1, 13.2, 13.3, 14.1, 14.2, 15.1, 15.2, 15.4, 15.5, 15.9 and 15.10; 18:19-1.1, 2.1, 2.2, 2.7, 3.1, 3.2, 4.1 and 5.5

Adopted Repeals: N.J.A.C. 18:18-2.9, 5.2, 5.3, 5.5, 5.11 through 5.17, 5.19, 5.20, 7.3, 12.9, 15.9 and 15.20

Adopted Repeal and New Rule: N.J.A.C. 18:18-7.10

Adopted New Rules: N.J.A.C. 18:18-3.24, 5.1 through 5.7, 12.16 through 12.19, 14.3; 18:19-4.2, 5.6, 6.1

Adopted Recodification with Amendments: N.J.A.C. 18:18-5.1 as 3.20; 18:18-5.4 as 3.21; 18:18-5.6 as 3.22; and 18:18-5.7 as 3.23

Proposed: November 21, 1994 at 26 N.J.R. 4512(a).

Adopted: January 12, 1995 by Richard D. Gardiner, Director, Division of Taxation.

Filed: January 13, 1995 as R.1995 d.79, **with substantive and technical changes** not requiring additional public notice and comments (see N.J.A.C. 1:30-4.3).

Authority: N.J.S.A. 54:39-10, 54:50-1, 56:6-6.

Effective Date: February 6, 1995.

Expiration Date: March 14, 1999.

Summary of Public Comments and Agency Responses:

The Division received two comments, one from a State agency and the other from an industry group.

Donald F. Henry, Assistant Director, New Jersey Division of Motor Vehicles, made the following comments:

COMMENT: To avoid possible confusion with other agencies or groups, N.J.A.C. 18:18-2.1(c) should be amended to replace "motor carriers" with "Division of Motor Vehicles."

RESPONSE: The Division agreed to this change.

COMMENT: The commenter suggested that N.J.A.C. 18:18-8.6, the fuel import limitation, be increased from 150 to 250 gallons since many long haul tractors utilize side mounted fuel tanks in excess of 150 gallons.

RESPONSE: The Division responded that P.L. 1992, c.23, section 33 raised the threshold for fuel supply in transient vehicles from 30 to 150 gallons. N.J.S.A. 54:39-43. Since the limit is contained in the statute, the Division did not consider it could increase the regulatory threshold to 250 gallons at this time.

COMMENT: The commenter suggested that N.J.A.C. 18:19-5.2(c) be revised so that "bulk storage facilities" in excess of 500 gallons be required to have sealed totalizers since the motor fuels use tax allows a refund to carriers who use as little as 2,000 gallons per quarter from bulk storage.

RESPONSE: The Division declined to follow this comment at the present time. The taxpayers who pay the motor carriers tax are not necessarily the same persons who would be subject to the present proposed rule. Further, to accept the comment would result in major expense to small businessmen and women.

Mr. Fred J. Sacco, Executive Vice President of the Fuel Merchants Association of New Jersey made the following comments:

COMMENT: The FMA/NJ strongly supported the legislation that changed the point of collection for the motor fuels tax. The regulations will help implement those changes effectively and the FMA/NJ supports them.

RESPONSE: The Division thanked the FMA/NJ for its support of the regulations.

COMMENT: The FMA/NJ suggested that N.J.S.A. 54:39-64.3, which requires that certain trustee accounts be set up, be revised.

RESPONSE: The comment is legislative in nature and the matter is being referred to the Division official whose responsibility is legislative coordination.

COMMENT: The FMA/NJ suggested amending N.J.S.A. 54:39-6.1, the definition of gasoline jobber.

RESPONSE: The comment is legislative in nature and the matter is being referred to the Division official whose responsibility is legislative coordination.

COMMENT: The FMA/NJ suggested amending N.J.S.A. 54:39-19 to permit discretion related to distributor and gasoline jobber bonds.

RESPONSE: The comment is legislative in nature and the matter is being referred to the Division official whose responsibility is legislative coordination.

COMMENT: The FMA/NJ suggested coordinating the point of collection of the petroleum products gross receipts tax with the motor fuels tax.

RESPONSE: The comment is legislative in nature and the matter is being referred to the Division official whose responsibility is legislative coordination.

Finally, upon its own initiative, the Division made several minor changes and additions not detrimental to the public to make the rule readoption more clear, readable, and understandable. In one instance the Division eliminated a proposed rule which was substantially duplicated elsewhere.

Summary of Agency-Initiated Changes:

The Division added the term "seller-user" to the definiton of "use" in N.J.A.C. 18:18-1.1, "exporter" to 2.1(b), to make the rules more complete. For the same reason, the terms "transporter" and "exporter" have been added to N.J.A.C 18:18-2.5(a), 2.6(a), 6.1 and 6.3.

The term "retailer" has been changed to "retail dealer" at N.J.A.C. 18:18-2.6(a), since the latter is the technical term for the license holder.

The Division has inserted the word "gasoline" in the title of Subchapter 3.

The Division has added the phrase "or has expired" to N.J.A.C. 18:18-3.7(a), since it was the intent of the Division to have every bond remain in effect for the same length of time as the Distributor's, Importer's or Gasoline Jobber's license in effect. Expiration should also be listed with revocation and cancellation, as it had been in the rule prior to this adoption, and all three are ways in which the effect of a license can end.

In N.J.A.C. 18:18-4.9, the word "taxable" was deleted, to make the rule more accurate.

References to "jobber" have been added at N.J.A.C. 18:18-3.18(f), to make the rule more complete.

N.J.A.C. 18:18-12.19 was deleted as unnecessary, since the provisions are included in N.J.A.C. 18:18-12.2.

In N.J.A.C. 18:18-15.10, the term "sales for export" was deleted, to conform to the amended statute.

Additionally, typographical errors were corrected at N.J.A.C. 18:18-3.20, 5.3(a)3 and 5.4(b).

Executive Order No. 27 Statement

The rulemaking is not subject to any Federal requirements or standards, but is adopted in accordance with State statutues; therefore, an analysis is not required.

Full text of the adoption follows (additions to proposal shown in boldface with asterisks ***thus***; deletions from proposal shown in brackets with asterisks *[thus]*):

18:18-1.1 Words and phrases defined

The following words and terms, when used in this chapter, shall have the following meanings, unless the context clearly indicates otherwise:

"Blender" means and includes any person that produces blended fuel within the terminal system. As used in this definition the term "terminal system" means and consists of refineries, pipelines, and bulk terminals. Motor fuel in any supply tank or any tank car, tanker, or other equipment suitable for ground transportation is not considered to be within the terminal system. A person that engages in "splash blending" is not considered to be a blender within the meaning of this rule.

You're viewing an archived copy from the New Jersey State Library.

Example: S heating oil company drives its tank truck to a terminal in Linden. The truck contains No. 2 heating oil. At the terminal a quantity of kerosene is added to the load. The truck drives away, and as it travels over bumps in the road, the two products mix in the tank. Based on this activity the heating oil company does not qualify as a blender within the meaning of the term.

. . .

"Distributor" means and includes every person, wherever resident or located, who produces, refines, manufactures, blends or compounds fuels and sells, uses, stores or distributes the same within this State.

. . .

"Fuels" means:

1. (No change.)

2. Any liquid or gaseous substance used, offered for sale or sold for use, either alone or when mixed, blended, or compounded, which is capable of generating power for the propulsion of motor vehicles upon the public highways;

3. It includes:

i.-ii. (No change.)

iii. All combustible gases which exist in a gaseous state at 60° Fahrenheit and at 14.7 pounds per square inch absolute pressure, industrial naphthas and solvents, aromatic distillages, diesel fuel, additives, and all other products not included within the foregoing provisions of this section, including any other liquids that are used or sold for use as a quantity extender to motor gasoline.

4. Provided, however, that any person dealing therein shall, at any time, and from time to time, upon written request of the Director, report his receipts, sales, use and distribution of said combustible gases and other products in a manner prescribed by the Director.

. . .

"Gasoline jobber" means a person who engages in the purchase and sale of gasoline for resale and who regularly makes 95 percent or more of his gasoline sales to not less than 25 retail dealers, fleet operators or other large consumers, including farm accounts.

1. (Reserved)

2. A gasoline jobber must qualify in every respect with all the terms and conditions prescribed for a gasoline jobber under these rulings. There is no requirement that a gasoline jobber possess a wholesale dealer's license in order to qualify for a gasoline jobber's license;

3. 95 percent of total wholesale sales as specified means 95 percent or more of the total gasoline sales expressed in gallons made in this State by a gasoline jobber. Such sales must consist of gasoline sales made at wholesale only; retail sales may not be included;

4.-9. (No change.)

10. (Reserved)

11. Gasoline jobber.

i. (No change.)

ii. In order to engage in wholesale sales of motor fuels other than gasoline, a gasoline jobber must obtain a special fuels seller/user license in addition to a gasoline jobber's license.

12. (No change.)

13. Revocation of license.

i. (No change.)

ii. In the event there is evidence that a gasoline jobber has failed to meet the requirements for the holding of a Gasoline Jobber's License, a hearing shall be conducted pursuant to the Administrative Procedure Act, N.J.S.A. 52:14B-1 et seq.

iii.-iv. (No change.)

"Importer" means:

1. A person wherever resident or located who brings gasoline into this State, from a point outside this State, for use, distribution, storage or sale in this State; or

2. (No change.)

. . .

"Seller of special fuels" means any person who sells any fuel capable of generating power in a diesel type engine which will include, without limitation, diesel fuel, No. 2 fuel oil, and kerosene.

"Special fuels" means any fuel capable of generating power in a diesel type engine which will include, without limitation, diesel fuel, No. 2 fuel oil and kerosene.

"Storage facility operator" means a person owning, renting or leasing a bulk storage facility in this State with a capacity of 100,000 gallons or more and any person leasing or subleasing space in such facility and storing fuels therein. A particular facility may have multiple tanks which together make up the 100,000 gallon capacity.

"Use" means and includes, in addition to its ordinary meaning, the transfer of fuel by a distributor, ***seller/user,*** importer, or gasoline jobber into a motor vehicle or into a receptacle from which fuel is supplied by him to his own or other motor vehicles.

"User of special fuels" means any person, except the State of New Jersey and any political subdivision thereof, who maintains a storage tank or tanks of any type, including a conveyance, equipped with a dispensing device, and being used for storage and dispensing any fuel capable of generating power in a diesel type engine for his own use. "Storage tanks" as used in this definition shall not apply to a vehicle service tank used to carry motor fuels for use exclusively in propelling the vehicle carrying the tank.

"Wholesale dealer" means any person not qualified as a gasoline jobber or distributor who engages in the business of the sale and/or purchase of tax-included gasoline to other persons who resell the gasoline or who place or have the gasoline placed into their containers or storage tanks for future consumption.

The word "containers" or "storage tanks" as used herein shall not apply to vehicle service tanks used only to carry motor fuels for use in propelling only the vehicle carrying such tanks.

SUBCHAPTER 2. LICENSING

18:18-2.1 General powers

(a) The Director is authorized and empowered to carry into effect and execute the provisions of the Act, and may make and enforce such rules and regulations as may be deemed necessary for the administration and enforcement of the same.

(b) The Director is authorized to conduct joint audits, subject to specific agreements with any agency of the United States of America, with another state, or through national or regional tax associations, of the obligations of any distributor, importer, gasoline jobber, retail dealer, wholesale dealer, seller of special fuels, user of special fuels, ***exporter,*** carrier or storage facility operator arising out of the Motor Fuels Tax Act. Notwithstanding the provisions of R.S. 54:50-8 (dealing with the confidentiality of tax records) to the contrary, such agreements may provide for the exchange of the records and files of the Director respecting the administration of the Motor Fuels Tax Act or of any other state tax law.

(c) The Director is authorized to arrange for the institution of programs of cooperation with other departments, divisions, and agencies of the State of New Jersey, such as but not limited to Weights and Measures, the Energy Office, *[Motor Carriers]* ***Division of Motor Vehicles*** and the Board of Regulatory Commissioners, where a program may be necessary to ensure effective and efficient administration and enforcement of the Motor Fuels Tax Act.

(d) The Director or his or her designated assistant, and such members of his staff as may be necessary and convenient, shall meet at the offices of the Director in Trenton not less than once annually with a council of advisors composed of not more than 10 persons representing various segments of the petroleum industry in New Jersey. The industry delegates to the council meeting shall be chosen by agreement of the representatives of the industry itself. The purpose of the meeting shall be to review and monitor the processes of collection and enforcement of all excise taxes dealing with motor fuels or petroleum products in this State.

18:18-2.4 Request for hearing upon refusal to grant license

(a) Any person who makes application for license or the renewal thereof may:

1. Within 10 days after refusal by the Director make a written request for a hearing; and

You're viewing an archived copy from the New Jersey State Library.

2. Shall then appear for a hearing conducted pursuant to the terms of the Administrative Procedure Act, N.J.S.A. 52:14B-1 et seq.

18:18-2.5 Revocation and cancellation of license

(a) The license held by any distributor, importer, gasoline jobber, retail dealer, wholesale dealer, seller of special fuels, user of special fuels, ***transporter, exporter,*** or storage facility operator may be suspended or revoked by the Director for a violation of any of the provisions of these rules, or on other reasonable grounds, after five days' notice of and hearing on such proposed revocation or suspension conducted pursuant to the Administrative Procedure Act, N.J.S.A. 52:14B-1 et seq.

(b)-(d) (No change.)

18:18-2.6 Hearings

(a) The Director may personally or by delegate conduct informal or formal hearings, administer oaths and examine any person engaged in the business of dealing in fuels as a distributor, importer, gasoline jobber, wholesale dealer, *[retailer]* ***retail dealer***, storage facility operator, seller of special fuels, user of special fuels***, transporter, exporter*** or otherwise, and the directors, officers, agents and employees of such person and all other witnesses, relative to the motor fuel business of such person, in respect to any matter incident to the administration of the Act.

(b) Where required by law, hearings shall be held pursuant to the terms of the Administrative Procedure Act, N.J.S.A. 52:14B-1 et seq.

18:18-2.7 Subpoenas for witness; records

(No change in text.)

Statutory Reference N.J.S.A. 54:39-14

18:18-2.8 Disobedience of subpoena

If any person subpoenaed to attend any hearing fails to appear, to be examined or to answer any question, or to produce any books or papers when ordered to do so by the Director or his assistants designated by him to conduct such hearing, the Director or such assistant or other official properly designated by law to do so may apply to the Superior Court for an order to compel him to do so.

18:18-2.9 (Repealed)

18:18-2.10 Nature of hearings

(a)-(b) (No change.)

(c) Where required by law, hearings shall be held pursuant to the Administrative Procedure Act, N.J.S.A. 52:14B-1 et seq.

SUBCHAPTER 3. DISTRIBUTOR'S, IMPORTER'S AND ***GASOLINE*** JOBBER'S LICENSE; BONDS REQUIRED; RECORDS

18:18-3.1 Distributor's license; application

(a) Obtaining.

1. (No change.)

2. Such application shall be accompanied by payment of a license fee of $450.00 for a three year period or part thereof and the filing of a bond in such form as the Director shall require.

(b) (No change.)

(c) A distributor licensed pursuant to this section is required to obtain a seller/user license to engage in the sale of special fuels. Such license shall be issued at no additional cost.

18:18-3.2 Refusal in certain cases

In the event that any application for a license is filed by any person whose license has at any time been revoked, or if it is determined that such application is filed by some person as a subterfuge for the real person in interest whose license has been revoked, the Director, after a hearing held pursuant to N.J.A.C. 18:18-2.6(b) (Hearings) may refuse such person a license.

18:18-3.3 Gasoline jobber's license

(a) Any gasoline jobber (see N.J.A.C. 18:18-1.1) in lieu of obtaining a wholesale license pursuant to N.J.S.A. 54:39-31, may apply for and obtain a Gasoline jobber's license on proper forms approved by the Director, by payment of a license fee of $450.00 for a three year period or part thereof and the filing of a bond in such form and amount as provided in N.J.A.C. 18:18-3.6.

(b) (No change.)

(c) As gasoline jobber licensed pursuant to this section is not also required to be licensed as a wholesale dealer to engage in the sale at wholesale of gasoline, but is required to obtain a seller/user license to engage in the sale of special fuels.

18:18-3.4 Qualifications for license

Any person applying for a Distributor's, Importer's or Gasoline Jobber's License must meet the qualifications for such license. See N.J.A.C. 18:18-2.3 concerning issuance of licenses.

18:18-3.5 Bond requirements

Before granting a license authorizing any person to engage in business as a distributor, gasoline jobber or as an importer, the Director shall require such person to file a bond, duly executed by such person as principal, and by a corporation, approved by the Director and authorized to engage in business as a surety by the Commissioner of Insurance of this State, as surety; payable to the State of New Jersey, conditioned upon the faithful performance of all the requirements of these rules and expressly providing for the payment of all taxes, penalties, and other obligations of such person arising out of the Act.

18:18-3.6 Amount of bond required

(a) (No change.)

(b) In fixing the total amount of the bond or bonds required to be filed by any distributor, importer or gasoline jobber, the Director may require a bond or bonds equivalent to an amount no greater than three times the tax on the greatest amount of motor fuels handled during a monthly period of the previous 12-month period in such manner as he may deem proper. The Director shall take into account the applicant's prior record as a New Jersey taxpayer and all other information as may be available to him or her which would establish the applicant's financial responsibility.

1. Where the application is made by any person who has theretofore never engaged in business in this State as a distributor, importer or gasoline jobber, prior to the filing of such application, the Director, after investigation, shall fix the total amount of such bond or bonds from such information as he or she may obtain after such investigation;

2. The total amount of any bond or bonds required to be filed by any distributor or gasoline jobber can never be less than $25,000 nor more than $1,000,000. The total amount of the bond or bonds required to be filed by any importer shall never be less than $50,000 nor more than $1,000,000.

3. (No change.)

18:18-3.7 Bond duration

(a) Every bond filed with and approved by the Director shall, without the necessity of periodic renewal, remain in force and effect until such time as the Distributor's License, Importer's License or Gasoline Jobber's License of which it is a part, is revoked for cause or otherwise cancelled ***or has expired***.

1. (No change.)

(b) Release and substitution of surety.

1.-4. (No change.)

18:18-3.8 Deposit in lieu of bond

In lieu of any bond or bonds required under N.J.A.C. 18:18-3.5 through 3.7, a distributor, importer or gasoline jobber may deposit with the State Treasurer, under such terms and conditions as the Director may prescribe, a like amount of lawful money of the United States, or bonds or other obligations of the United States, or the State of New Jersey, of an actual market value not less than the amount fixed by the Director.

18:18-3.9 License issued when bond approved

Upon the acceptance and approval of the application and bond, the Director shall issue a license permitting the conduct of business as a distributor, importer or gasoline jobber in this State, subject to cancellation as provided by law.

You're viewing an archived copy from the New Jersey State Library.

18:18-3.10 License not assignable

Any license so issued by the Director is not assignable, and is valid only for the distributor, importer or gasoline jobber in whose name the license is issued.

18:18-3.11 Violations for acting as a distributor, importer or gasoline jobber without a license

Any person conducting business in this State as a distributor, importer or gasoline jobber without first securing a license from the Director, is deemed guilty of a crime of the fourth degree and subject to the penalties provided by law.

18:18-3.12 Records

Every distributor, importer and gasoline jobber is required to keep a record for a four year period of all fuels sold or used, including the name of the purchaser, the number of gallons used or sold and the date of the sale or use.

18:18-3.13 Statements with consignment

(a) Every distributor, importer and gasoline jobber must also delivery with every consignment of such fuel to a purchaser within this State, a written statement containing the date and number of gallons delivered, the kind and grade of fuel involved, and the names of the purchaser and seller, showing a separate charge for the tax on every gallon.

1. (No change.)

2. Such records and written statements are to be preserved by the distributor, importer, gasoline jobber and purchaser respectively for a period of four years and are to be offered for inspection upon the verbal or written demand of the Director or any of his duly authorized assistants.

18:18-3.14 Physical inventory required

Every distributor, importer and gasoline jobber is to take a physical inventory of the fuels on hand on the first or last day of every calendar month and is to keep the record of such inventory for a four year period and all other information required in these rules available at all times for the inspection of the Director or his assistants.

18:18-3.15 Furnishing of statement

Whenever demanded by the Director or his or her assistants every distributor, importer and gasoline jobber is required to furnish a statement, under oath, reflecting the contents of any records required to be kept under these rules.

18:18-3.17 Segregated gasoline not in inventory

Gasoline which is segregated for the exclusive use of a distributor, importer or gasoline jobber is not to be included in the physical inventory on hand at the beginning or end of the month, but is to be dealt with as sales for company use at time of delivery or storage.

18:18-3.18 Disposals and receipts

(a) (No change.)

(b) Any gasoline held in common storage with another person or persons:

1. Is deemed to have been purchased by that association and "is not to be included as a receipt or held in inventory"; therefore

2. Such fuels, when subsequently delivered by such an association, properly licensed, are deemed to be purchased at the time all such fuels are received.

(c) (No change.)

18:18-3.19 Terms of licenses

(a) Every license and permit required by the Act, except a transporter's and storage facility license is issued for a three year period, or unexpired portion thereof, commencing on April 1 and ending the third succeeding March 31 and is void thereafter.

1. Any such license or permit may be suspended or revoked by the Director in accordance with these rules.

2. Every transporter's and storage facility license, once issued, remains in force until March 31 of the year following issuance and shall be void thereafter unless renewed. A license, once issued, shall remain in force during the period of issuance unless suspended or revoked for cause or otherwise cancelled.

18:18-3.20 Importer license; tax reports and payments

Any person (other than a properly licensed distributor who brings gasoline into this State from a point outside this State, for use, distribution, storage, or sale in this State*)* is required to obtain an importer's license from the Director and must furnish bond as required in these rules. See N.J.A.C. 18:18-7 for reporting requirements.

18:18-3.21 Records on transactions and invoices

(a) Records on all transactions must be kept for examination by the Director or his or her assistants. See N.J.A.C. 18:18-3.12 through 3.15.

(b) (No change.)

(c) Invoice.

1. (No change.)

i. (No change.)

ii. Kind and grade of the product involved;

iii.-iv. (No change.)

2.-3. (No change.)

18:18-3.22 Distributors are not required to have an importer's license to import gasoline

New Jersey Licensed Distributors are not required to hold an importer's license to import gasoline, but must report all fuels imported in their tax returns.

18:18-3.23 Jobbers importing fuels

Gasoline jobbers are required to have an importer's license to import gasolines into New Jersey.

18:18-3.24 Seller and user importing special fuels

Sellers of special fuels or users of special fuels are required to have a seller/user license to import special fuels into New Jersey.

SUBCHAPTER 4. WHOLESALE AND RETAIL DEALERS AND TRANSPORT LICENSES

18:18-4.1 Retail dealer license; fee; display of license

(a) (No change.)

(b) Upon receipt of the application together with a fee of $150.00 for a three year period for each license desired, the Director shall issue a license plate or suitable substitute containing the number assigned the licensee and words denoting the type of license, which the licensee is required to display at each establishment as regulated by the Director.

(c) (No change.)

18:18-4.2 Wholesale dealer license; fee

(a) Every wholesale dealer must before engaging in the business of making wholesale sales of gasoline (that is, tax-paid sales) procure from the Director a license for each establishment, wherever located, operated by such person out of which wholesale sales in New Jersey are made.

(b) Out-of-state or no establishment.

1.-2. (No change.)

3. A fee of $450.00 is required for the issuance of each license for a three year period.

18:18-4.3 Restrictions on retail and wholesale sales

(a) (No change.)

(b) Wholesale sales are sales made for resale or into the containers or storage tanks of consuming customers for future consumption.

1.-3. (No change.)

4. Any number of trucks may be operated by the licensed wholesale dealer in the conduct of such business provided that the required Motor Fuel Transport License on each vehicle has been obtained;

5. All requests for licenses, by mail or otherwise, are to include the name and mailing address of the applicant and the exact location of the establishment to be licensed;

6. No sales of special fuels may be made without obtaining a seller/user license, which may be issued to a licensee without additional charge.

(c)-(d) (No change.)

You're viewing an archived copy from the New Jersey State Library.

(e) Fuel for diesel engines used in propelling diesel-operated boats may be sold by a licensed seller/user but only fuel used to propel a vehicle over the land highways of the State is taxable. N.J.A.C. 18:18-5.1.

18:18-4.4 Wholesale or retail dealer license

A wholesale or retail dealer's license issued under the Act remains in force from the date of issue until the third succeeding March 31, unless sooner revoked or suspended.

18:18-4.5 Records required for a wholesale audit

(a) Every wholesale dealer and retail dealer purchasing gasoline, taxable under these rules, is required to maintain and keep for a period of four years, a record of gasoline received and sold, the amount of tax paid to the distributor, importer or gasoline jobber, as part of the purchase price together with delivery tickets, totalizer readings, invoices, bills of lading, monthly physical inventories, and such other records as the Director may require. Such records shall be offered for inspection upon the verbal or written demand of the Director or any of his or her duly authorized assistants.

(b) Every wholesale dealer must keep the following records of transactions in gasoline:

1. A receipt book record which is to be supported by or be composed of a file of all invoices or delivery tickets (both of which shall be identified for reference purposes by number or code) covering all kinds of gasoline products purchased by the dealer.

i. Every such invoice or delivery ticket is to show, on its face, the kind of gasoline product, the unit price, the amount of New Jersey motor fuel tax, if any, and the total amount of the invoice;

ii. (No change.)

2. A Daily Sales Record which is to show the quantity of each gasoline product sold each day, including both cash and charge or credit sales;

3. A Monthly Physical Inventory Record which is to show a record of the quantity of each gasoline product on hand at the close of each month's business, which is to be the result of actual measurements taken physically on the date.

(c) All records kept by wholesale dealers are to be safely preserved for a period of four years in such a manner as to ensure their security and accessibility for inspection by the Director, or any employee of the Division of Taxation engaged in the administration of the New Jersey Motor Fuels Tax Law.

18:18-4.6 Retail dealer records required

(a) Every retail dealer purchasing fuels, taxable under the Act, is required to maintain and keep for a period of four years, a record of fuels received and sold which shall include pump meter readings, the amount of tax paid to the distributor, importer or gasoline jobber as part of the purchase price, together with delivery tickets, totalizer readings, invoices, bills of lading, monthly physical inventories and such other records as the Director may require.

(b) Daily record; preserving

1. Every retail dealer is required to keep a daily record which shall include pump meter readings showing the total amount of fuels sold on each business day;

2. Such records are to be preserved for a period of four years and to be open for inspection by the Director or any of his assistants at all times. (See N.J.A.C. 18:19-4.1 for additional required records.)

18:18-4.7 Wholesale license required when sales are made by a commissioned agent

(a) Any person selling tax-included gasoline at wholesale, from a location in New Jersey, through a commissioned agent, is required to hold a Wholesale Dealer's License for that specific plant.

(b) The commissioned agent, on this arrangement, is not required to hold a Wholesale Dealer's License for this location unless he sells tax-included gasoline in his own name.

18:18-4.8 Invoice on sales

(a) On all sales of gasoline and special fuels (except as noted in (c) below) except deliveries into the service tank of a vehicle, every licensed motor fuel dealer in this State is required to give the purchaser an invoice showing:

1. (No change.)

2. The kind and grade of the product;

3.-4. (No change.)

(b) In the case of sales of kerosene by retail dealers, the dealer may maintain a daily log of sales transactions in lieu of issuing invoices to customers.

18:18-4.9 Wholesale and retail sales require seller/user license for special fuel sales

Every person making sales of *[taxable]* special fuels at wholesale or retail must obtain a seller/user license. Such license will be issued at no charge to a person holding a wholesale or retail dealer's license. See N.J.A.C. 18:18-5.1.

18:18-4.10 Transport licenses

(a) (No change.)

(b) License certificates and plates. Upon receipt of an application, properly completed, the Director shall issue a license certificate and license plate for each conveyance which indicates the license number assigned and which must be displayed on the conveyance at all times and in such manner as the Director may regulate.

(c) Expiration and fee.

1. (No change.)

2. A fee of $50.00 is required for the licensing of each conveyance.

(d) Licensee not relieved of obligation. Nothing contained in this rule in any manner relieves or discharges any person obtaining a license hereunder from complying with any of the provisions of any other laws.

SUBCHAPTER 5. SELLER OF SPECIAL FUELS LICENSE, USER OF SPECIAL FUELS LICENSE (I.E., SELLER/USER), STORAGE FACILITY LICENSE

Agency Note: N.J.A.C. 18:18-5.1, 5.4, 5.6 and 5.7 are proposed for amendment recodified as N.J.A.C. 18:18-3.20, 3.21, 3.22, and 3.23, respectively.

18:18-5.1 Seller/user license

(a) Every seller of special fuels and every user of special fuels shall apply for and obtain a seller of special fuels license or a user of special fuels license (herein sometimes referred to as a seller/user license) on forms to be prescribed by the Director. Primary points to be included in the seller/user license application form include in addition the usual name, address, name of person responsible for filing reports, ID number, business name, and names of officers, the following information: a list of the applicant's suppliers of special fuels, any and all transporters utilized to deliver product, an estimated average of taxable sales for a 12 month period. The license, unless cancelled or revoked, shall remain in effect for three years and may be renewed at that time.

(b) A licensed distributor, importer, gasoline jobber, wholesale dealer, and retail dealer who sells and/or uses any fuel capable of generating power in a diesel type engine shall register as such with the Director, Division of Taxation at such time as such licensee applies for any other applicable license. No separate charge shall be made for this registration. Reporting requirements will be included in connection with reports required for such primary license.

(c) A person, not otherwise excluded by these rules, who acquires kerojet (turbine) fuel and/or kerosene for commercial use is subject to the licensing requirement under (a) above.

18:18-5.2 Reporting; tax payment

(a) Every seller of special fuels and every user of special fuels upon whom a tax is imposed by the Motor Fuels Act shall, on or before the 20th day of each month render a report to the Director on forms prescribed by the Director showing such information as the Director may require. The report form for sellers/users of special fuels shall include the items set forth at N.J.S.A. 54:39-64.4.

(b) A tax is imposed at the current rate per gallon on the total number of gallons of special fuels:

1. Delivered or placed into the fuel supply tank or other fueling receptacle or device of a motor vehicle for use to propel the vehicle over the public highways; or

2. Used within the meaning assigned by this chapter; or

You're viewing an archived copy from the New Jersey State Library.

3. Sold to unlicensed buyers.

(c) The tax under (b) above shall be paid to the State but once in respect to any fuels used within the State.

18:18-5.3 Sales not subject to tax

(a) The tax imposed shall not apply to the following:

1. Fuels not within the taxing power of this State under the Constitution of the United States;

2. Fuel that is used by or sold and delivered to the United States government, when such sales and deliveries are supported by documentary evidence satisfactory to the Division;

3. Fuels not in excess of 150 gallons brought into this State in the fuel supply tanks *[of]* ***or*** other fueling receptacles or devices of a motor vehicle;

4. Fuels used by, or sold or delivered to, the State of New Jersey or its political subdivisions when such sales and deliveries are supported by documentary evidence satisfactory to the Division; or

5. Fuel sold to diplomatic missions and diplomatic personnel under a program administered by the Director and predicated upon the United States Department of State, Office of Foreign Missions or successor office's national tax exemption program.

18:18-5.4 Separate account; personal liability

(a) The user or seller of special fuels shall maintain a separate trustee account to be credited daily with taxes due on amounts of fuels used on that day.

(b) The tax to be paid to the seller of special fuels is paid as a trustee for *[an]* ***and*** on account of the State. The account shall be maintained for and on account of the State.

(c) Every person required to collect any tax imposed by this chapter shall be personally liable for the tax imposed, collected, or required to be paid, collected or remitted under the Motor Fuels Tax Act.

18:18-5.5 Bonds; form; amount

(a) The Director may require a seller of special fuels or a user of special fuels to file a bond with the Director. Whether or not the Director shall require a bond in a particular instance shall depend upon the taxpayer's prior filing history, if any, with the Division; whether the taxpayer holds motor fuels licenses or has other motor fuels surety bonds, such as a distributor bond, jobber or importer; the amount of the taxpayer's monthly motor fuels tax liability; and such other factors as the Director shall consider.

(b) The amount of the bond required to be filed with the Director shall be in an amount not greater than three times the tax on the greatest amount of motor fuels handled during any one month of the previous 12 months, provided that in no case shall the bond be less than $1,000 nor greater than $1 million.

(c) Such bond shall be in such form as approved by the Director, shall be executed by a surety company duly licensed to do business under the laws of the State of New Jersey, and be conditioned upon the prompt filing of true reports and the payment by the licensee to the Director of all motor fuels taxes which are now or which hereafter may be levied or imposed by the State of New Jersey, together with any and all penalties and interest thereon, and generally upon faithful compliance with the provisions of this chapter.

(d) Bonds of the United States or the State of New Jersey, having an actual market value not less than the amount fixed by the Director, may be filed with the State Treasurer as security in lieu of the surety bond as required by this rule.

(e) Bond requirements for seller/users (retail dealer license holders are as follows:)

1. For owned retail operations:

i. The bond required will be three times the tax on the monthly handle of the previous owner (per return), or three times the estimated sales per application.

ii. Any prior negative filing history for any State tax, including, but not limited to, corporation, partnership, sales, or individual taxes, will be considered in determining the amount of the bond which will be required.

iii. Retailers must file a bond if they sell as an average 3,000 or more gallons of taxable fuel per month. The bond required will be three times the tax amount on the established or projected monthly handle, but not less than $1,000.

Example: 20,000 gallons highest monthly taxable sales × 13½ cents (tax rate) × three = $8,100 amount of bond required

iv. A minimum bond of $1,000 will be required.

2. For leased retail operations:

i. The bond required will be three times the handle of the previous lessee (per return), or three times the estimated sales per application.

ii. Any prior negative filing history for any State tax, including but not limited to corporation, partnership, sales or individual taxes, will be considered in determining the amount of the bond.

iii. A minimum bond of $5,000 will be required.

(f) Bond requirements for users of special fuels:

1. For use in excess of 7,500 gallons per month a bond will be required in the amount of three times the handle.

2. Any negative prior filing history will be considered in determining the amount of the bond.

(g) If upon review of a taxpayer's filing history, the Director finds that there is an increase in business activity, including, but not limited to, an increased handle of special fuel, then it may be adjusted. The taxpayer may request a review, and must provide documentation.

(h) A taxpayer may apply for, and receive, a waiver of the bonding requirement if the taxpayer has held a motor fuels license for three or more years, has no delinquent returns or deficiencies outstanding, and has an 80 percent timely filing history.

(i) If the taxpayer fails to provide a bond, a complaint will be signed under N.J.S.A. 54:52-6(d).

(j) All distributors, jobbers and importers who presently have bonds will not be required to post additional bond, or a higher amount pending review of seller/user liability.

18:18-5.6 Farmers

(a) A farmer who has a tank and uses special fuels for powering vehicles over the public highways shall apply to the Director for a seller/user of special fuels license.

(b) Such farmer shall assess and remit tax to the Director on applicable forms in accordance with these rules.

(c) In calculating taxable gallonage, special fuel used for powering agricultural tractors not operated on a public highway, farm machinery, vehicles and other equipment operated exclusively on private property shall result in no increased liability otherwise due and payable to the Division. See N.J.S.A. 54:39-66(1)(c)(d) and (i).

(d) This shall not affect tax liability or exempt status under any other statute such as a road use tax. See N.J.S.A. 54:39A-1 et seq.

18:18-5.7 Storage facility operators

(a) Upon receipt of a satisfactory application, the Director shall issue a license certificate for each storage facility operator with an assigned license number printed thereon, which license certificate shall be displayed at the facility in such manner as the director may direct. A license fee of $150.00 shall be paid for each license. The license, unless cancelled or revoked, shall remain in effect for one year and is subject to renewal. Nothing contained herein shall in any manner relieve or discharge a licensed storage facility operator from complying with the provisions of other laws.

(b) A storage facility operator shall, on or before the 20th day of each month, render a report to the Director, on forms prescribed by him, or her stating the quantities of fuel received at the storage facility in the State or sold from it during the preceding month. The report shall include the name and address of any person leasing or subleasing storage in the facility and the quantities of fuel stored by each such person.

(c) The Director or his or her authorized agents shall have the right at any time during normal business hours to inspect the books of a storage facility operator to determine if the requirements of this rule are being properly observed.

(d) Service stations are not storage facilities within the meaning of the term "storage facility."

(e) Licensed New Jersey distributors, seller/users, or jobbers who are not lessors of storage facilities or have throughput agreements

You're viewing an archived copy from the New Jersey State Library.

(including without limitation agreements involving the right to use stored products) are not storage facility operators within the meaning of the term.

(f) A person storing or keeping fuel within a storage facility shall, before receiving fuel, apply to the Director for a storage facility operator's license for each storage facility location on forms prescribed by the Director.

(g) In addition to identifying information, such as name, address, identifying number, affiliated companies, the license application shall include identifying information concerning the person who files reports, agents of applicant, products stored, name and address of any location owned leased or subleased, where any fuels are stored, a list of tank capacity and location owned, data concerning leased, subleased and terminalling or throughput agreement and whether applicant has ever had a license cancelled.

SUBCHAPTER 6. CORPORATIONS

18:18-6.1 Persons subject to the Act

The terms "distributor," "gasoline jobber," "retail dealer," "wholesale dealer," "importer," "seller/user of special fuels," "storage facility operator," ***"transporter," "exporter,"*** and "person," as used in these rules, include an officer, director, stockholder or employee of a corporation, or a member of a partnership, who as such officer, director, stockholder, employee or member is under the duty to perform the act in respect to which the violation occurs.

18:18-6.2 Corporations formed to evade the law

(a) Where the Director has reason to believe that any corporation has been formed for the purpose of evading these rules, he or she may require such corporation to show cause why an application for a license by such corporation should not be denied, or why the license of such corporation should not be revoked.

(b) (No change.)

18:18-6.3 Previous violations preclude corporation from getting license

(a) No corporation will be entitled to hold a license as a distributor, importer, seller/user of special fuels, storage facility operator, ***transporter, exporter,*** gasoline jobber, wholesale dealer, or retail dealer, when it appears that:

1. Any officer, director or employee of such corporation has heretofore been convicted of violating any of these rules; or

2. Where a license issued pursuant to these rules and held by such officer, director or employee has been heretofore revoked by the Director for cause.

SUBCHAPTER 7. IMPOSITION OF TAX AND TAX REPORTING

18:18-7.1 Distributors, importers and gasoline jobbers monthly tax reporting and payments; penalties

(a) Every distributor, importer and gasoline jobber must, on or before the 20th day of each month, file a report with the Director, on forms prescribed, prepared and furnished by the Director, stating the number of gallons of fuel sold or used in this State by him during the preceding calendar month.

1. A tax at the current rate per gallon on each gallon reported must be paid by each distributor, importer and gasoline jobber and payment is to accompany the monthly report;

2. (No change.)

3. Sales of fuels may be made by one licensed distributor, importer or gasoline jobber to another licensed distributor or gasoline jobber free of such tax pursuant to the provisions of N.J.A.C. 18:18-7.2.

(b) If any distributor, importer or gasoline jobber fails, neglects or refuses to file the report within the time prescribed by this rule, the Director:

1. (No change.)

2. Will estimate the sales, distribution and use of said distributors, importer or gasoline jobber, assessing the tax thereon, adding to said tax a penalty of 20 percent for the failure, neglect or refusal to report; and

3. Such estimate is prima facie evidence of the true amount of tax due from such distributor, importer or gasoline jobber.

(c) Waiver, public inspection of records.

1. If good and sufficient cause or reason is shown for such delinquency, the Director may remit or waive the payment of the whole or any part of the penalty. See N.J.A.C. 18:2-2.7.

2. (No change.)

18:18-7.2 Special conditions on reporting by distributors, importers and gasoline jobbers

(a) Reporting tax-free sales in New Jersey by distributors, importers, and/or gasoline jobbers.

1. Tax free sales in New Jersey by distributors, importers, and/or gasoline jobbers may be made provided:

i. The selling distributor, importer, and/or gasoline jobber enters the gallonage involved on the applicable line of the Tax Report for the month of sale, with supporting entry on the appropriate schedule; and

ii. The purchasing distributor or gasoline jobber enters the gallonage on appropriate receipt line of the Tax Report for the month of purchase, with supporting entry on the proper schedule.

2. Because rules pertaining to tax-free sales by distributors and gasoline jobbers in New Jersey are elective and not mandatory, tax-paid sales of gasoline in New Jersey by distributors and jobbers may be made provided:

i. The seller enters the gallonage on the applicable line of the Tax Report with supporting entry on the proper schedule; and

ii. (No change.)

iii. The purchasing distributor or gasoline jobber, in addition, will take credit for the tax paid at the time of purchase on the appropriate line of the report.

3. For more detailed information on reporting tax-free sales by distributors, importers, and gasoline jobbers, refer to the reporting instructions for distributors, importers, and gasoline jobbers.

(b) Reporting on sales by distributors, importers and gasoline jobbers to U.S. Government, State of New Jersey, any political subdivision of this State or to department or agency of either.

1. Where tax-free sales of fuels are made directly by a licensed distributor, importer or gasoline jobber to the United States Government, State of New Jersey, any political subdivision of this State or to a department or agency of either and billings for the fuels are on invoices of the licensed distributor, importer or gasoline jobber, such tax-free sales must be entered on the appropriate line of the distributor, importer or gasoline jobber Monthly Tax Report, with supporting entry on the appropriate schedule;

2. These sales include deliveries of fuels to the United States Government, State of New Jersey, any political subdivision of this State or to a department or agency of either for the account of the licensed distributor, importer or gasoline jobber through the recognition of the licensed distributor's courtesy cards;

3. Licensed distributors, importers or gasoline jobbers are required, during the periodic audit of their records by the Director or any authorized assistants, to establish by means of delivery tickets, invoices, ledger cards, open orders, contracts or otherwise, satisfactory evidence of sales to the United States Government, State of New Jersey, any political subdivision of this State or to a department or agency of either by the licensed distributor, importer or gasoline jobber or for his account by a licensed dealer;

4. Where tax-free sales of fuels are made by licensed dealers or importers out of New Jersey tax-paid fuels inventory and a licensed distributor or gasoline jobber has refunded the New Jersey motor fuels tax to the licensed dealer or importer, such tax-free sales must be entered on the appropriate line of the Monthly Tax Report, with supporting entry on the appropriate schedule;

i. In further support of the entries referred to above, a properly completed Federal Exemption Certificate, Form 1094, or New Jersey Exemption Certificate, Form C-6060MF, covering the gallonage entered must be attached to the report;

ii. (No change.)

5. No claims for exemption from the New Jersey state tax can be recognized by the State after the expiration of two years from the date of sale.

You're viewing an archived copy from the New Jersey State Library.

(c) Reporting on sales agreements. Arrangements for the transfer of ownership of fuels by New Jersey licensed motor fuel distributors, importers, or gasoline jobbers for future delivery, whether called sales, loans exchanges or otherwise, are not to be reported as sales on Tax Reports, but shall be known only as sales agreements or contracts. They must be reported as sales only when:

1.-2. (No change.)

(d) Reporting exports made by distributors, importers, and gasoline jobbers.

1. Export. New Jersey licensed motor fuel distributors, importers, and gasoline jobbers must report all exports (sales, transfers or other disposals) on the appropriate line and schedule of the New Jersey Tax Report of the month during which such exports were made;

2. Sales for exports. New Jersey licensed motor fuel distributors, importers, and gasoline jobbers must report all sales for export on the appropriate line and schedule of the New Jersey Tax Report of the month during which such sales for export were made;

Example: A tax-free sale in New Jersey between licensed distributors and gasoline jobbers has been completed before any export takes place. When the purchaser taking the fuel out of New Jersey does not hold a distributor or gasoline jobbers or other New Jersey motor fuels license and required periodically to file a return as such, such exporter shall obtain an exporter license at least seven days before the day of exportation and report the export on or before the 20th day of the month following the month in which the exportation occurred to the Director on forms supplied by the Director.

3. If the transaction is made between distributors and/or gasoline jobbers only, such dispositions will be handled as a tax-free sale between the seller followed by an export by the purchasing distributor or gasoline jobber;

i. The seller will report such sales on the appropriate line and schedule of the Tax Report for the month of sale;

ii. The purchaser will enter the gallonage on the proper receipt line and schedule and the export on the appropriate line and schedule of the Tax Report.

4. See also N.J.A.C. 18:18-9.

(e) Reporting sales and/or useof special fuels by New Jersey licensed distributors, gasoline jobbers and importers.

1. Distributors, gasoline jobbers and importers are required to have a seller/user license to report sales and uses of special fuels;

2. See N.J.A.C. 18:18-5.1(b) for reporting requirements for seller/user; and see N.J.A.C. 18:18-7.4 for payment requirements.

(f) Refundable uses by Licensed Distributors ***and Gasoline Jobbers***. The Director may, in his discretion, permit a Distributor ***or licensed Gasoline Jobber*** entitled to a refund under the provisions listed in N.J.A.C. 18:18-15.1 to take credit therefor in lieu of such refund in such manner as the Director may require, on a report filed pursuant to these *[regulations]* ***rules***.

1. Subject to investigation, such gallonage on which the tax had been paid may be listed on the appropriate line of the Distributor's ***or Gasoline Jobber's*** Monthly Tax Report supported by entries on the appropriate schedule.

2. (No change.)

(g) A tax-free sale by an importer may be made to a licensed distributor or gasoline jobber. An importer may not purchase tax free gasoline in New Jersey.

(h) An importer is not required to have an export license to export gasoline. All exports will be reported on the appropriate line of the importer return.

18:18-7.4 Seller/user tax reports and payments

(a) Persons required to obtain a seller/user license pursuant to N.J.A.C. 18:18-5.1 must file Tax Report, accompanied by tax payment at the current rate on or before the 20th day of the month following the month of sales or uses.

(b) The current rate of tax per gallon on each gallon of liquefied petroleum gas and liquefied or compressed natural gas sold or used to propel motor vehicles upon the public highways shall be one-half the rate applicable and paid on the sale or use of gasoline under N.J.S.A. 54:39-27.

18:18-7.5 Taxable sales by U.S. Government, State of New Jersey, any political subdivision of this State or department or agency or either

(a) The provisions of these rules requiring the payment of taxes are not to be construed to apply to fuel sold to the U.S. Government, State of New Jersey, any political subdivision of this State or any department or agency thereof for their official use. (See also N.J.A.C. 18:18-14.3 for diplomatic missions and personnel provision.)

(b)-(c) (No change.)

18:18-7.8 Losses listed on tax reports by licensed distributors, importers, and gasoline jobbers

(a)-(b) (No change.)

18:18-7.9 Invoices delivered with sales; information required

(a) All licensed distributors, importers and gasoline jobbers in this State, on all sales of gasoline except deliveries into the service tank of a vehicle, must give each purchaser an invoice showing:

1. (No change.)

2. Kind and grade of the fuel involved;

3.-4. (No change.)

(b) (No change.)

18:18-7.10 Proper filing of reports

(a) A tax report which is submitted to the Director and which does not fully set forth the information required to be included in the report will not be considered a proper filing by the taxpayer, and will be returned to the taxpayer.

(b) A tax return, report, notice, petition, protest, claim or other document to be filed or remittance containing payment of tax, required to be filed within a prescribed period, or on or before a prescribed date, under the provisions of these rules that is delivered after the period or the date by the United States mail to the Division of Taxation, the Director, or other person with whom the document is required to be filed shall be deemed to be delivered on the date of the United States postmark stamped on the envelope.

(c) This provision shall apply only if the postmark date falls within the prescribed period or on or before the prescribed date for the filing of the document, determined with regard to any extension granted for filing, and the document was deposited in the mail, postage prepaid, properly addressed to the Division of Taxation, the Director, or other person or office with which or with whom the document is required to be filed.

(d) If any document is sent by United States registered or certified mail, such registration or certification shall be prima facie evidence that the document was delivered to the Director, bureau, office, officer or person to which or to whom addressed.

(e)1. If the postmark on the envelope or wrapper containing the document or payment is made by other than the United States Postal Service (that is, metered mail): the postmark so made must bear a date which falls within the prescribed period on or before the prescribed date for filing or paying (including any extensions of time granted for filing or paying); and the document or payment must be received by the Division not later than the time when an envelope or other appropriate wrapper which has sufficient postage prepaid and is properly addressed, mailed and sent by the same class of mail would ordinarily be received at the address designated by the Division if it were postmarked at the same point of origin by the United States Postal Service within the prescribed period or on or before such prescribed date for filing or paying (including any extensions of time granted for filing or paying).

2. In a case where the document or payment is received after the time when a document or payment so mailed and so postmarked by the United States Postal Service would ordinarily be received at the address designated by the Division, such document or payment will be treated as having been received at a time when a document or payment so mailed and postmarked would ordinarily have been received, if the person who or which is required to file or pay establishes: that it was actually deposited in the mail before the last collection of the mail from the place of deposit which was postmarked (except for metered mail) by the United States Postal Service within the prescribed period or on or before the prescribed

You're viewing an archived copy from the New Jersey State Library.

date for filing or paying; that the delay in receiving the document or payment was due to a delay in the transmission of the mail; and the cause of such delay.

3. If the envelope or wrapper containing the document or payment has a postmark made by the United States Postal Service in addition to the postmark not so made, the postmark which was not made by the United States Postal Service will be disregarded, and whether the envelope or wrapper was mailed in accordance with this section will be determined solely by applying the provisions of subsection (b) of this section.

18:18-7.11 Audit

(a) (No change.)

(b) The examination of returns and the assessment of additional taxes, penalties and interest shall be as provided by the State Tax Uniform Procedure Law, N.J.S.A. 54:48-1 et seq.

(c) No assessment of additional tax shall be made after the expiration of more than four years from the date of the filing of a return; provided, that in the case of a false or fraudulent return with intent to evade tax, or failure to file a return, the tax may be assessed at any time. If, before the expiration of the period prescribed herein for the assessment of additional tax, a taxpayer consents in writing that such period may be extended, the amount of such additional tax due may be determined at any time within such extended period. The period so extended may be further extended by subsequent consents in writing made before the expiration of the extended period.

(d) For purposes of this subsection, a return filed before the last day prescribed by law or by rules promulgated pursuant to law for the filing thereof, shall be considered as filed on such last day.

SUBCHAPTER 8. FUEL CARRIERS

18:18-8.1 Reports by fuel carriers

Every railway or railroad company, water transportation company, and person transporting fuels as herein defined, in bulk, between points within the State, and every water transportation company and person transporting fuel in bulk to a point outside the State from any point within the State, or to a point within the State from a point outside of the State, must at any time, upon written request of the Director, report, in a manner prescribed by the Director, all deliveries of fuel so made to points within or without the State.

18:18-8.2 Monthly report; contents

(a) (No change.)

(b) The monthly report must show:

1.-9. (No change.)

10. Kind of product and the quantity of gallons in each shipment;

11. The name of account requesting pick up;

12. Bill of lading number.

(c) A qualifying company transporting only company owned fuel and having an exemption opinion letter from the Director is relieved of filing such monthly reports.

18:18-8.3 Inspection of transporter's records

The Director or his authorized agents have the right at any time during the normal business hours to inspect the books of any transporter determine if the requirement of these rules are being properly observed.

18:18-8.4 Registration of conveyances; license plates

(a)-(b) (No change.)

(c) A license fee of $50.00 must be paid for the licensing of each conveyance.

(d) (No change.)

(e) Nothing contained in these rules will in any manner relieve or discharge persons obtaining licenses thereunder from complying with any or all provisions of other laws.

18:18-8.5 Delivery tickets required; Director or police may inspect

(a) Possession.

1. (No change.)

2. Any agent of the Director or police officer may stop any conveyance in order to determine whether or not the provisions of this rule are being observed.

(b) (No change.)

1.-4. (No change.)

5. A statement of the assumption of tax if a New Jersey licensed distributor, importer or gasoline jobber, give the name and distributor's, importer's or gasoline jobber's license number. If not, besides the name of the company, give the name and address of the responsible individual who is assuming the responsibility for accounting that the tax has been or will be paid;

6.-8. (No change.)

(c) (No change.)

18:18-8.6 Fuel limit importation

Every person coming into this State in a motor vehicle may transport in the fuel tanks of such vehicle, for the propulsion thereof, not more than 150 gallons of fuel without paying the tax, securing the license or making any report herein provided.

18:18-8.7 Vessel and vehicle carrier regulations

(a) The master or other person in charge of any barge, tanker or other vessel in which fuel is being transported, or of a tank truck, truck tractor, semitrailer, trailer, or other vehicle used in transporting fuels, other than fuels being transported for use in operating the engine which propels the vessel or vehicle, or for the purpose of generating power in stationary engines to operate pumps for discharge of liquid cargo, must have in his possession an invoice, bill of sale or other evidence showing:

1.-3. (No change.)

(b) (No change.)

1. (No change.)

i. Where a New Jersey licensed distributor, importer or gasoline jobber is assuming it, the name and address and license number of that person will be sufficient;

ii. (No change.)

2. Whenever the fuel is being transported to a point outside of New Jersey, there must be included on the invoice, bill of sale or other record evidence, a statement that the New Jersey seller or consignor is exporting the fuel.

(c) Any person violating any of the provisions of this section shall be guilty of a crime of the fourth degree.

18:18-8.9 Water carrier's requirements

(a)-(e) (No change.)

(f) Registration. Every person operating a water carrier transporting or delivering motor fuels must apply for its registration to the Division of Taxation and shall display the license card and plate as required by the instruction of the Division of Taxation.

18:18-8.10 Suspension of license

The license cards issued for the operation over the public highways or waterways of this State of any conveyance used for the transporting or hauling of fuels may be suspended or revoked upon reasonable grounds by the Director in the same manner as other licenses may be suspended or revoked by the Director under these rules.

18:18-9.1 Exported fuels exempt; proof required and must be reported

(a) Neither these rules nor any of the provisions hereof apply to fuels when exported by a distributor, importer or gasoline jobber from the State of New Jersey into any other state or country.

(b) Any person not otherwise licensed pursuant to N.J.S.A. 54:39-1 et seq., who acquires title or takes delivery of any fuels within New Jersey and subsequently exports such fuels from the State of New Jersey into any other state or country, shall apply for an exporter's license on forms prescribed by the Director and pay a $450.00 fee seven days or more before the day of exportation. The items to be included in the exporters application form includes, in addition to the usual identifying items, the name of parent company and corporate affiliates of applicant, the person charged with the duty of filing reports, an enumeration of related licenses held in foreign states or countries, an estimate of expected gallons exported,

You're viewing an archived copy from the New Jersey State Library.

information about other registrations applicant may have with the Division of Taxation, the manner in which applicant expects to export motor fuels from New Jersey, and any outstanding liability or litigation applicant may have. The license shall have a three year duration. The exportation of untaxed fuels in an amount in excess of 100 gallons per day without first obtaining a license pursuant to N.J.S.A. 54:39-1 et seq. shall be a crime of the fourth degree.

(c) Every person exporting is required to report such exports to the Director on or before the 20th day of each month in such detail as the Director may require, and including the number of gallons of fuel exported or used by the exporter during the preceding calendar month. Unless such return is properly filed, the exemption herein granted will be null and void, and it is prima facie evidence that all such fuel was distributed in this State subject to the tax provided for in these rules.

1. Licensed distributors, importers, gasoline jobbers and seller-users must report such transactions as tax-free disposals. For procedure in reporting see N.J.A.C. 18:18-7.2(d).

2. A person not licensed as a distributor, importer, gasoline jobber, or seller/user who has paid the State tax on the fuel involved, may apply for a refund of the State tax by filing a refund claim (see N.J.A.C. 18:18-15.10 (Refund procedure)).

(d) The filing of an erroneous report by an exporter with intent to evade tax shall be a crime of the fourth degree.

18:18-9.2 Export must be fully completed

(a) If the person to whom the fuels are sold in New Jersey refuses to divulge the final destination of the fuels in another state or foreign country, thereby not permitting the proper reporting as required by these rules, the New Jersey tax will be collected by the seller at the time of the sale in New Jersey.

(b) (No change.)

18:18-9.3 Falsely obtaining fuel for export; crime of the fourth degree

(a) Any person, firm, partnership, association or corporation or any officer or agent thereof who:

1. Obtains fuel for export and fails to export the same or any portion thereof; or

2. Causes the fuel or any portion thereof not to be exported; or

3. Diverts said fuel or any portion thereof; or

4. Causes to be diverted from interstate or foreign transit begun in this State or who unlawfully returns said fuel or any part thereof to this State and sells or uses said fuel or any part thereof in this State; or

5. Causes said fuel or any part thereof to be used or sold in this State, and fails to forthwith notify the Director of such act; and

6. Any distributor, gasoline jobber or other person who conspires with any person, firm, partnership, association or corporation or any officer or agent thereof to do the things mentioned in (a)1 through 5 above with intent to avoid any taxes imposed by these rules, shall be guilty of a crime of the fourth degree.

SUBCHAPTER 10. TAX PAID IN ERROR—REFUND AND APPEALS

18:18-10.1 Refunds paid out of escrow

(a) When the Director determines that any moneys received under these rules were paid in error he or she shall cause the same to be refunded, but shall refuse to authorize a refund if more than four years has elapsed from the time the erroneous payment was made.

(b) (No change.)

SUBCHAPTER 11. COLLECTION OF TAXES

18:18-11.1 Suits by the Attorney General for taxes and penalties

The Attorney General will commence an action at law in any court of competent jurisdiction for the collection of all delinquent taxes, together with all penalties which may accrue for failure to pay such taxes within the time prescribed by these rules or for failure to comply with all of these rules.

18:18-11.2 Debt docketed; licensee deemed to accept procedure; appeal

(a) Certificate of indebtedness; effect.

1. As an additional or alternative remedy, the Director may issue a certificate to the clerk of the Superior Court or to any county clerk that any person is indebted under these rules in an amount named in such certificate. Thereupon the clerk to whom such certificate has been issued will immediately enter upon his record of docketed judgments:

i. The name of such person; and

ii. The amount of the debt so certified and the date of making such entries.

2. The making of such entries has the same force and effect as the entry of a docketed judgment in the office of such clerk.

3. (No change.)

(b) Every person who is licensed under these rules, and every refund claimant who has applied for and received benefits under N.J.A.C. 18:18-15.1 shall, by the acceptance of such license and benefits, be deemed to have consented to the procedure set forth in these rules.

(c) Such person may within a period of 90 days from the date of issuance of such certificate appeal to the Tax Court for a review of the assessment included in such certificate.

(d) Every person required to collect any tax imposed by these rules shall be personally liable for the tax imposed, collected or required to be paid, collected or remitted under these rules and be the subject of a certificate issued under this rule.

18:18-11.3 Release of liens; payment or deposit

(a) The Director, upon application made to him and upon the payment of a fee of $25.00, may release any property from the lien of any judgment or levy procured by him, provided:

1.-2. (No change.)

SUBCHAPTER 12. OFFENSES, FINES AND PENALTIES

18:18-12.1 Failure to procure licenses; penalty

Every person who engages in business as a wholesale dealer without first procuring a license from the Director and every person who engages in business as a retail dealer without first applying to the Director for a license, as required by these rules, or continues in business as a retailer after the end of the fourteenth day following the date of such application without having procured the license and displayed it at the establishment being operated, will be subject for the first offense, to a penalty of $250.00 and, for the second offense and thereafter, will be subject to a penalty of $500.00, and for failure to forthwith pay such penalty after conviction, he may be imprisoned for a period of not less than five nor more than 30 days.

18:18-12.2 Failure to keep records

(a) Any person who fails to furnish an invoice, keep the records required to be kept by virtue of N.J.S.A. 54:39-33 and 54:39-34, or who refuses or fails to permit inspection of such records by the Director or any of his agents will be subject:

1. For the first offense to a penalty of $250.00; and

2. For the second offense and thereafter, to a penalty of $500.00.

(b) (No change.)

18:18-12.3 Failure to register conveyance; penalty imposed

(a) Any person engaged in the business of hauling, transporting or delivering fuel who causes to be operated any conveyance without having a license certificate and license plate displayed thereon as provided by N.J.S.A. 54:39-41 will be subject:

1. For the first offense to a penalty of $250.00; and

2. For the second offense and thereafter to a penalty of $500.00.

(b) (No change.)

18:18-12.4 Failure to have delivery tickets; penalty imposed

(a) The driver of any conveyance used for the transportation or hauling of fuels who fails to have and possess at all times while hauling or transporting fuels a delivery ticket containing the information provided for by N.J.S.A. 54:39-42 and 54:39-44 will be subject:

1. For the first offense to a penalty of $100.00; and

You're viewing an archived copy from the New Jersey State Library.

2. For the second offense and thereafter, to a penalty of $500.00.
(b) (No change.)

18:18-12.6 False export claims; crime of the fourth degree
(a) Any person, firm, partnership, association or corporation or any officer or agent thereof who:
1. Obtains fuel for export and fails to export the same or any portion thereof; or
2. (No change.)
3. Diverts said fuel or any portion thereof; or
4. Causes to be diverted from interstate or foreign transit begun in this State; or
5.-7. (No change.)
8. Any distributor or other person who conspires with any person, firm, partnership, association or corporation or any officer or agent thereof to do the things mentioned in this section with intent to avoid any taxes imposed by these rules shall be guilty of a crime of the fourth degree.

18:18-12.8 Acting as a distributor or gasoline jobber without license; crime of the fourth degree
(a) No person shall be a distributor, importer or gasoline jobber without first securing a license from the Director.
(b) Any person who violates this rule shall be deemed guilty of a crime of the fourth degree.

18:18-12.10 False refund claims; failure to keep records on refund claims
(a) Any person who:
1. (No change.)
2. Collects or causes to be repaid to him or to any other person any such reimbursement or refund without being entitled to the same shall be guilty of a crime. (See N.J.A.C. 18:18-15.4 (Payment of refunds)).
(b) (No change.)

18:18-12.16 Seller or user of special fuels without license; penalties
Every person who engages in business as a seller of special fuels or as a user of special fuels without first procuring a license from the Director shall be subject for the first offense to a penalty of $250.00 and for the second offense and thereafter to a penalty of $500.00, and for failure forthwith to pay such penalty after conviction, he shall be imprisoned for a period of not less than five nor more than 30 days.

18:18-12.17 Storage facility operator without license; penalties
A person who engages in the operation of a storage facility or stores fuel in a storage facility without first obtaining a storage facility operator's license from the Director as required by law, shall be subject to a penalty of $250.00 and for the second offense and thereafter shall be subject to a penalty of $500.00, and for failure to pay such penalty forthwith after conviction, he shall be imprisoned for a period of not less than five nor more than 30 days.

18:18-12.18 Failure of storage facility operator to keep records; penalties
A storage facility operator who fails to keep the records required to be kept, or refuses or fails to permit inspection of such records by the director or any of his assistants shall be subject for the first offense to a penalty of $250.00 and for the second offense and thereafter shall be subject to a penalty of $500.00, and for failure to pay such penalty forthwith after conviction, he shall be imprisoned for a period of not less than five nor more than 30 days.

*[18:18-12.19 Failure of retail dealer, wholesale dealer, seller or user of special fuels to keep records; penalties
Every retail dealer or wholesale dealer or any seller or user of special fuels who shall fail to furnish an invoice or who shall fail to keep the records required to be kept by virtue of N.J.S.A. 54:39-33 or 54:39-34 or these rules, or who shall refuse or fail to permit inspection of such records by the Director or any of his agents shall be subject for the first offense to a penalty of $250.00 and for the second offense and thereafter shall be subject to a penalty of $500.00, and for failure to forthwith pay such penalty after conviction, he shall be imprisoned for a period of not less than five nor more than 30 days.]*

18:18-*[12.20]****12.19*** Certain untaxed special fuel subject to forfeiture
N.J.S.A. 2C:64-1 provides that any interest in untaxed special fuel shall be subject to forfeiture under certain circumstances.

SUBCHAPTER 13. PROCEDURES FOR COLLECTION OF FINES AND PENALTIES

18:18-13.1 Law applicable except to crimes
The procedure to be followed in actions for the collection of penalties and fines set forth in the N.J.A.C. 18:18-12 shall, except where the offense is punishable as a crime, be as hereinafter provided.

18:18-13.2 Suit by Director; jurisdiction; process
(a) The penalty or fine imposed because of violation of any provision of these rules as noted in N.J.A.C. 18:18-13.1, will be sued for in the name of the Director.
(b) The Superior Court and any municipal court, if the violation occurs within the territorial jurisdiction of such court will have jurisdiction over proceedings to enforce and collect the penalty or fine.
(c) (No change.)

18:18-13.3 Judgment; commitment for nonpayment
If judgment be rendered for the plaintiff the court will cause any defendant who may refuse or fail to pay forthwith the amount or the judgment rendered against him and all costs and charges incident thereto, to be committed to the county jail for any period not exceeding the period mentioned in these rules.

SUBCHAPTER 14. EXEMPTIONS

18:18-14.1 Sales to Federal Government, State of New Jersey, any political subdivision of this State, or to department or agency of either exempt; time limit for tax credit
(a) The provisions of these rules requiring the payment of taxes are not to be construed to apply to fuel sold to the government of the United States, to the State of New Jersey, any political subdivision of this State, or to any department or agency of either for official use in motor vehicles, motor boats, other implements owned or leased by the State of New Jersey or any political subdivision or agency of this State, but every distributor, gasoline jobber, importer and seller/user must report such sales to the Director at such times and in such detail as the Director may require.
(b) Any claim for exemption under these rules may be made by the distributor, gasoline jobber, importer and seller/user at any time within two years after the date of sale, but no claim made after the expiration of said two years will be recognized for any purpose by the State or any agency thereof.
(c)-(d) (No change.)

18:18-14.2 Reporting tax-free sales to United States Government, State of New Jersey, any political subdivision of this State or to department or agency of either
(a) Direct sales.
1. Where tax-free sales of fuels are made directly by a licensed distributor, gasoline jobber, licensed importer, or licensed seller/user to the United States Government, State of New Jersey, any political subdivision of this State or to a department or agency of either and billings for the fuels are on invoices of the licensed distributor, gasoline jobber, licensed importer, or licensed seller/user, such tax-free sales are to be entered on the applicable line of the Monthly Tax Report, with supporting entry on the appropriate schedule;
2. These sales include deliveries of fuels to the United States Government, State of New Jersey, any political subdivision of this State or to a department or agency of either for the account of the licensed distributor, gasoline jobber, licensed importer or licensed seller/user through the recognition of their Courtesy Cards;

You're viewing an archived copy from the New Jersey State Library.

3. The licensed distributor, gasoline jobber, licensed importer, or licensed seller/user is required, during the periodical audit of his records by the Director or any authorized assistants, to establish by means of delivery tickets, invoices, ledger cards, open orders, contracts or otherwise, satisfactory evidence of sales to the United States Government, State of New Jersey, any political subdivision of this State or to a department or agency of either by the licensed distributor, gasoline jobber, licensed importer, or licensed seller/user or for his account by a licensed dealer.

(b) Where tax-free sales of fuels are made by licensed dealers or importers out of New Jersey tax-paid fuels inventory and the licensed distributor, importer or gasoline jobber has refunded the New Jersey motor fuels tax to the licensed dealer or importer, the tax-free sales are to be entered on the appropriate line of the Monthly Tax Report, with supporting entry on the appropriate schedule.

1. In further support of the entries on the appropriate line, properly completed Federal Exemption Certificates, Form 1094, or New Jersey Exemption Certificates, Form C-6060MF, covering the gallonage entered must be attached to the Report;

2. (No change.)

(c) (No change.)

18:18-14.3 Diplomatic missions and diplomatic personnel

(a) Diplomatic missions and diplomatic personnel, as retail purchasers of motor fuel, are exempt from the motor fuels tax imposed pursuant to Chapter 39 of Title 54 of the New Jersey Revised Statutes only to the extent provided for in this section. Such provisions are predicated on the United States Department of State, Office of Foreign Missions' national tax exemption program.

1. "Diplomatic missions" as used in this section means permanent missions to the United Nations and foreign embassies and consulates.

2. "Diplomatic personnel" as used in this section means foreign embassy and consular officials, certain foreign embassy and consular employees, certain officers and employees of the United Nations, of international organizations and of permanent missions to the United Nations, and certain employees of the Coordination Council for North American Affairs.

(b) In order for diplomatic missions and diplomatic personnel to receive an exemption from the motor fuels tax, such mission or personnel must establish its exempt tax status with the United States Department of State or, in the case of employees of the Coordination Council for North American Affairs, with the American Institute in Taiwan. The United States Department of State or the American Institute in Taiwan must then certify to an oil company which issues credit cards, that such mission or personnel is exempt from the motor fuels tax. Diplomatic mission or diplomatic personnel seeking exemption from tax must then obtain credit cards from such an oil company. Although no exemption from tax is allowed at the time of the retail sale of the fuel, purchases of motor fuel charged to authorized credit cards will be billed exclusive of the tax from which the purchaser is exempt. Retail sellers of motor fuel may not sell such fuel to diplomatic missions or personnel without passing through the motor fuels tax at the time of the sale.

1. Oil companies, which in agreement with the United States Department of State or the American Institute in Taiwan have issued authorized credit cards to diplomatic missions and diplomatic personnel, may bill such missions and personnel for credit card purchases of motor fuel, exclusive of the motor fuels tax. Such oil companies are entitled to a refund or credit of such tax in the amount which they have reimbursed directly or indirectly the retail seller of such fuel or the amount they themselves may be liable to remit directly to the Division of Taxation. Sufficient records must be maintained to verify the amounts of all refunds and credits claimed on the basis of credit card sales to diplomatic missions and diplomatic personnel.

(c) Tax exemption cards issued to diplomatic missions and diplomatic personnel by the United States Department of State or the American Institute in Taiwan may not be used to purchase motor fuel upon which the seller has not passed through the motor fuels tax.

(d) Notwithstanding any other provision in this chapter, no tax exemption will be provided nor will a refund, credit or reimbursement be granted where diplomatic missions or diplomatic personnel purchase motor fuel by any means other than through the use of an authorized oil company credit card.

(e) The provisions of this section are also applicable to the administration of the tax imposed on diesel fuel pursuant to Chapter 39 of Title 54 of the New Jersey Revised Statutes.

SUBCHAPTER 15. REFUNDS

18:18-15.1 Refundable uses; application for refund; supporting tax-paid invoices; distributor procedure

(a) Any person who uses any fuels for any of the purposes listed in (d) below and who has paid the tax for such fuels hereby required to be paid, will be reimbursed and repaid the amount of tax so paid upon presenting to the director an application for reimbursement or repayment, which application must be verified by a declaration of the applicant that the statements contained therein are true.

(b)-(c) (No change.)

(d) For the purposes of this section, the following uses of motor fuel may entitle the taxpayer to a refund provided all of the requirements of this section are met:

1. (No change.)

2. Autobuses while being operated over the highways of this State in a regular route bus operation as defined in N.J.S.A. 48:4-1 and under operating authority conferred pursuant to N.J.S.A. 48:4-3 (Certificate of public convenience and necessity).

3. Autobuses while providing bus service under a contract with the New Jersey Transit Corporation or under a contract with a county for special or rural transportation bus service subject to the jurisdiction of the New Jersey Transit Corporation pursuant to P.L. 1979, c.150 (C.27:25-1 et seq.), and autobuses providing commuter bus service which receive or discharge passengers in New Jersey. For the purpose of this paragraph "commuter bus service" means regularly scheduled passenger service provided by motor vehicles whether within or across the geographical boundaries of New Jersey and utilized by passengers using reduced fare, multiple ride or commutation tickets and shall not include charter bus operations or special bus operations as defined in N.J.S.A. 48:4-1. Buses operated for the transportation of enrolled children and adults only when serving as chaperones to or from a school, school connected activity, day camp, summer day camp, nursery school, child care center, preschool center or other similar places of education, including "School Vehicle Type I" and "School Vehicle Type II" as defined in N.J.S.A. 39:1-1 do not qualify for refund under this subsection.

(Recodify existing 3.-19. as 4.-20. (No change in text.)

21. The $.03 per gallon increase in the tax on diesel fuel imposed by P.L. 1984, c.73, sec. 35 as such special fuel is used by passenger automobiles and motor vehicles of less than 5,000 pounds gross weight.

18:18-15.2 Distributor may take credit in lieu of refund; seller/user report of refundable use

(a) (No change.)

(b) A licensed seller/user of special fuels shall report and explain on its return, or a rider attached to its return, otherwise refundable uses as "nontaxable use" on the appropriate line and schedule of its seller/user return. The taxpayer will not report the gallonage qualified for refund by virtue of such refundable uses as taxable gallonage on the return and shall not remit tax on such gallonage.

18:18-15.4 Payment of refunds; time limit; false statements and/or fraudulent payments; crimes

(a)-(b) (No change.)

(c) Any person or member of any firm or the officer or agent of any corporation who makes any false statement in any application required for the reimbursement and repayment of any taxes, or who collects or causes to be repaid to him or to any other person any such reimbursement or refund without being entitled to the same shall be guilty of a crime. See N.J.A.C. 18:18-12.10 (False refund claims).

You're viewing an archived copy from the New Jersey State Library.

18:18-15.5 Records establishing claims

(a) (No change.)

(b) In order to establish the validity of claims filed, the claimant must maintain and preserve for a period of at least four years such fuel consumption records as may be prescribed by the Director.

(c) (No change.)

(d) Failure of the claimant to maintain and preserve such records, furnish such additional proof or to accede to the demand for such examination by the Director, or any of his representatives, constitutes a waiver of all rights to the claim or claims questioned and such subsequent claims as the Director may determine.

18:18-15.10 Refund procedure for licensed exporters on export *[or sales for export]*

All persons, not motor fuel distributors, gasoline jobbers or importers, exporting or selling for export fuels may secure refund of any New Jersey State motor fuel tax previously paid on same by writing to the New Jersey Division of Taxation, Trenton, New Jersey 08646.

1.-2. (No change.)

18:19-1.1 Words and phrases defined

The following words and terms, when used in this chapter, shall have the following meanings unless the context clearly indicates otherwise:

. . .

"Seller of special fuels" means any person who sells any fuel capable of generating power in a diesel type engine which will include, without limitation, diesel fuel, No. 2 fuel oil, and kerosene.

. . .

"Special fuels" means any fuel capable of generating power in a diesel type engine which will include, without limitation thereto, diesel fuel, No. 2 fuel oil, and kerosene.

. . .

"User of special fuels" means any person, except the State of New Jersey and any political subdivision thereof, who maintains a storage tank or tanks of any type, including a conveyance, equipped with a dispensing device and being used for storage and dispensing diesel fuel, No. 2 fuel oil, or kerosene, for his own use. "Storage tanks" as used in this section shall not apply to a vehicle service tank used to carry motor fuels for use exclusively in propelling the vehicle carrying the tank.

18:19-2.1 Posted price signs

(a)-(b) (No change.)

(c) No retail dealer shall sell or offer for sale any motor fuel without having attached by a suitable bracket or slot arrangement to each pump or other dispensing equipment from which motor fuel is sold or offered for sale a weather-proof case not less than 5½ inches by eight inches and not more than 12 inches by 12 inches, on both sides of which will be displayed a card insert price sign not less than five inches by 7½ inches and not more than 11½ inches by 11½ inches, stating the price per gallon if sold by the gallon, and per gallon and per liter if sold by the liter at which motor fuel may be purchased from such pumps or other dispensing equipment.

1. Data to be shown on price signs:

i.-ii. (No change.)

iii. If the credit price is the same as the cash price a statement in words to that effect may be included in the signage, in lieu of repeating the unit price in digits for both cash and credit prices. Such signs shall show no other data than the data required by this subsection.

2.-6. (No change.)

(d) Upon application by an interested party, the Division may specifically find and approve for use in a particular case that a proposed pump topper sign meets the intention and spirit of the price disclosure law although the dimensions and physical composition of the proposed signage vary slightly from that noted in this rule.

18:19-2.2 Special conditions for price signs

(a)-(d) (No change.)

(e) See N.J.A.C. 18:19-2.1(d).

18:19-2.7 Posted prices and brand names, cash discounts, of diesel fuel

(a) (No change.)

(b) A retail dealer may sell similar fuels at different prices to cash and credit customers, and the price posted on top of the pump and on the pump meter shall be the credit purchase price. A conspicuous sign shall also be displayed at the pump or at the island posting the price per gallon (or per gallon and per liter) reduction for cash purchases of fuels. At his option, a dealer may also meet the cash/credit price posting requirement with a pump top split sign pursuant to N.J.A.C. 18:19-2.1(c) showing the cash price per gallon on the top half of the sign and the credit price per gallon on the bottom half of the sign having the same background colors (compare N.J.A.C. 18:19-2.1(c)1ii). If the dealer offers the same price for cash and credit customers, the dealer may substitute a message in words for one row of digits. The message would state that the same price applies for cash and credit sales. If the dealer elects to offer an island dedicated exclusively to cash sales, the price posted on top of the pumps and the pump meters at the dedicated island shall be the cash purchase price.

(c)-(e) (No change.)

18:19-3.1 Violations and penalties

(a) Rules concerning violations and penalties follow:

1. (No change.)

2. Who sells motor fuel at a price other than the per gallon or per gallon and per liter price, as provided by N.J.S.A. 56:6-2; or

3. Who violates any other provisions of N.J.S.A. 56:6-2, shall, upon conviction:

i.-iii. (No change.)

4. (No change.)

18:19-3.2 Procedure for collection of penalties

The following procedure will be followed in actions for the enforcement of penalties set forth in N.J.A.C. 18:19-3.1.

(a) (No change.)

1. (No change.)

2. The Superior Court and every municipal court is authorized, upon the filing of a complaint in writing, duly verified by the Director, or by any assistant or employee of the Director, which may be made upon information or belief, that any retail dealer has violated any of the requirements of N.J.A.C. 18:19-2 to issue process at the suit of the Director as plaintiff;

3.-6. (No change.)

(b) (No change.)

1. (No change.)

2. The court has the power to adjourn the hearing or trial in any case from time to time, but in such case, except in case where the first process was a summons, it is the duty of the judge of such court, to detail the defendant in safe custody, unless he enters into a bond to the Director with at least one sufficient surety, in a sum fixed by the court which will not be less than $50.00 nor more than $200.00, conditioned on:

i.-iv. (No change.)

(c) (No change.)

1. The clerk of court may sign and seal any process required to issue under the Act, except a warrant of commitment;

2. (No change.)

3. Any judgment recovered for a penalty under the provisions of the Act in any municipal court may be docketed with the Superior Court as other judgments of said court are docketed; cf. N.J.S.A. 56:6-4.1c.

4. (No change.)

(d) Injunction.

1. The Director may file a bill in the Superior Court for an injunction to prohibit any habitual violation of the Act, or any of the orders or rules made by the Director, and every such action will proceed in the Superior Court according to the rules and practice of that court;

2. (No change.)

You're viewing an archived copy from the New Jersey State Library.

SUBCHAPTER 4. RECORDS REQUIRED; TOTALIZERS

18:19-4.1 Records required to be kept by retail dealer, and seller and user of special fuels

(a) Every retail dealer must keep records as described in this section and as are necessary to the determination of whether or not such retail dealer has observed the provisions of this chapter.

1. All records must be safely preserved for a period of four years in such manner as to insure their security and accessibility for inspection by the Director or any employee of the Division of Taxation engaged in the administration of these rules;

2. (No change.)

(b) Every retail dealer, seller of special fuels and user of special fuels must keep the following records:

1. (No change.)

i.-ii. (No change.)

iii. Since motor fuels sales and/or use are recorded by meter (that is, totalizer), allowance must be made for pump priming and meter testing. Pump totalizer readings, as part of the sales records, shall be kept on a daily basis.

2. (No change.)

3. If monthly statements are received in place of daily invoices or delivery tickets, every such statement must show on its face the same detail as required herein with respect to invoices and delivery tickets;

i. (No change.)

ii. Cancelled checks and stubs must be retained as receipts for payment of merchandise;

iii. Daily invoices and delivery tickets shall be maintained for a period of four years unless the Director consents to a destruction of such records at any time within such period.

4. (No change.)

i.-ii. (No change.)

iii. Gasoline or special fuels drawn from the dealer's pumps and used in the conduct of his business (operating delivery or towing vehicles, cleaning equipment, etc.,) is to be charged to an expense and not included in sales.

5. (No change.)

6. All records kept by retail dealers, sellers or users of special fuels must be safely preserved for a period of four years in such a manner as to insure their security and accessibility for inspection by the Director or any employee of the Division of Taxation engaged in the administration of the motor fuels tax rules provided in N.J.A.C. 18:18-1.1 et seq.

18:19-4.2 Totalizers

(a) All above ground pumps connected to storage tanks which are used to dispense fuels by a retail dealer or a seller of special fuels or a user of special fuels, as defined in chapter 39 of Title 54 of the Revised Statutes who delivers or places fuels into the fuel supply tank or other fueling receptacles or devices of a motor vehicle, or who uses fuels within the meaning of the word "use" as defined in that chapter, or who makes sales to unlicensed buyers, shall have in operation at all times the pump is in use, a working, sealed, gallons totalizer of at least six digits.

(b) The six digits are measured from the left of the decimal point and do not represent tenths or fractions of a gallon.

(c) Users of special fuels whose monthly usage does not exceed 7,500 gallons are not required to have sealed totalizers.

18:19-5.5 Suspension and revocation of license

(a) The Director may suspend or revoke the license held by any retail dealer for a violation of any of the provisions of these rules or on other reasonable ground or grounds, after five days' notice of such proposed revocation or suspension, and the ground or grounds thereof to such retail dealer.

(b) Said notice will be served personally or by registered mail upon the retail dealer and will set forth the date, time, and place of hearing to be conducted under the provisions of the Administrative Procedure Act, N.J.S.A. 52:14B-1 et seq., for that purpose.

18:19-5.6 Power to seal totalizers

The Director or his or her assistants may, by the use of seals or sealing devices, ensure that totalizers or seals cannot be removed, altered, or manipulated.

SUBCHAPTER 6. CRIME

18:19-6.1 Altering totalizer

Any person who, without permission or authority and for the purpose of evading or circumventing any law of this State, alters, manipulates, replaces, or in any other manner tampers or interferes with or causes to be altered, manipulated, replaced, tampered or interfered with, a totalizer, or who operates a pump not equipped with a sealed totalizer required by these rules, is guilty of a crime of the fourth degree.

OTHER AGENCIES

(a)

NEW JERSEY HIGHWAY AUTHORITY
GARDEN STATE PARKWAY

Notice of Administrative Corrections
Authority Records and New Jersey State Police Reports
Copy Charges
N.J.A.C. 19:8-7.2 and 7.3

Take notice that the New Jersey Highway Authority has discovered errors in the current text of N.J.A.C. 19:8-7.2(b) and 7.3(b)1. Neither provision reflects the copy fees as adopted effective October 5, 1987 at 19 N.J.R. 1825(a) and (b), respectively. This notice of administrative correction is published in accordance with N.J.A.C. 1:30-2.7.

Full text of the corrected rules follows (additions indicated in boldface **thus**; deletions indicated in brackets [thus]):

19:8-7.2 General provisions

(a) (No change.)

(b) Except as otherwise specified herein, copies of such records may be obtained by written request accompanied by a check or money order made payable to the New Jersey Highway Authority in accordance with the following fee schedule:

1. Documents up to 8½ by 13 inches, per page ..... $[0.50] **1.00**;
2. Documents larger than 8½ by 13 inches, per page ..... $[1.00] **2.00**;
3. Drawings, maps and plan sheets, per page .... $[1.00] **2.00**;
4. Microfilm, per page or sheet ..... $[1.00] **3.00**;
5. Photographs up to 8 by 10 inches, black and white glossy, per picture ..... $[3.00] **10.00**;
6. Photographs up to 8 by 10 inches, color glossy, per picture ..... $[6.00] **15.00**;
7. Slides, 35 millimeter, per slide ..... $[1.00] **10.00**;

(c)-(d) (No change.)

19:8-7.3 New Jersey State Police reports

(a) (No change.)

(b) All requests must be accompanied by a check or money order payable to the New Jersey Highway Authority in accordance with the following schedule:

1. All accident reports regardless of the number of pages, [$5.00] **$10.00**.

(c)-(e) (No change.)

You're viewing an archived copy from the New Jersey State Library.

(a)

CASINO CONTROL COMMISSION

Accounting and Internal Controls
Complimentary Services or Items
Table Game and Slot Incentive Programs—Actual Loss

Adopted Amendment: N.J.A.C. 19:45-1.9

Proposed: October 17, 1994 at 26 N.J.R. 4173(b).
Adopted: January 11, 1995 by the Casino Control Commission, Bradford S. Smith, Chairman.
Filed: January 13, 1995 as R.1995 d.77, **without change**.
Authority: N.J.S.A. 5:12-63(c), 69(a), 70(j), 70(l), 99 and 102.
Effective Date: February 6, 1995.
Expiration Date: August 15, 1997.

Summary of Public Comments and Agency Responses:
COMMENT: The Division of Gaming Enforcement has no objection to the adoption of the proposed amendment.
RESPONSE: Accepted.

Executive Order No. 27 Statement

An Executive Order No. 27 analysis and certification is not required because the rulemaking requirements of the Casino Control Commission are dictated by the Casino Control Act, N.J.S.A. 5:12-1 et seq., and are not subject to any Federal requirements or standards.

Full text of the adoption follows:

19:45-1.9 Complimentary services or items
(a)-(e) (No change.)
(f) Any complimentary service or item, including a complimentary cash or noncash gift, which is issued to a patron as part of a table game or slot machine complimentary incentive program shall be subject to the requirements of N.J.A.C. 19:45-1.46 and this subsection and shall not be included on the daily complimentary report required by (e) above or subject to the annual limitation on cash complimentaries established by N.J.A.C. 19:45-1.9B(g) if:
1.-2. (No change.)
3. Each participant in the program is issued complimentaries in accordance with a predetermined schedule as a result of his or her table game or slot play, which schedule shall, with regard to cash complimentaries, be based on and shall not exceed:
i. The theoretical win of the casino licensee from each participant or the participant's actual loss as reasonably determined from data maintained pursuant to the approved internal controls for the complimentary incentive program; or
ii. (No change.)
4. (No change.)
(g)-(i) (No change.)

(b)

CASINO CONTROL COMMISSION

Gaming Equipment
Rules of the Games
Super Pan 9

Temporary Adoption of Amendments to N.J.A.C. 19:45-1.15, 1.16, 1.17, 1.18 and 1.19; New Rules 19:46-1.12A and 19:47-13.1 through 13.10

Authority: N.J.S.A. 5:12-5, 69(e), 70(f) and 100(e).

Take notice that the Casino Control Commission shall, pursuant to N.J.S.A. 5:12-69(e), conduct an experiment for the purpose of determining whether a game known as Super Pan 9 is suitable for casino use.

The experiment shall be conducted in accordance with temporary rules which will be posted in each casino participating in the experiment and will also be available from the Commission upon request.

This test would allow any casino licensee which wishes to participate in the experiment, and which meets all terms and conditions established by the Commission, to conduct the game of Super Pan 9 in its casino.

This experiment could begin no sooner than February 13, 1995 and continue for a maximum of 270 days from that date, unless otherwise terminated by the Commission or any of the participating casino licensees prior to that time, pursuant to the terms and conditions of the experiment.

Should the temporary amendments and new rules prove successful, in the judgement of the Commission, the Commission will propose them for final adoption, in accordance with the public notice and comment requirements of the Administrative Procedure Act and N.J.A.C. 1:30.

(c)

CASINO CONTROL COMMISSION

Rules of the Games
Pai Gow Poker; Additional Wager

Adopted Amendments: N.J.A.C. 19:46-1.13B; 19:47-11.8, 11.8A and 11.8B
Adopted New Rule: N.J.A.C. 19:47-11.13

Proposed: November 7, 1994 at 26 N.J.R. 4343(a).
Adopted: January 11, 1995 by the Casino Control Commission, Bradford S. Smith, Chairman.
Filed: January 13, 1995 as R.1995 d.78, **without change**.
Authority: N.J.S.A. 5:12-63(c), 69(a), 70(f), 99(a) and 100.
Effective Date: February 6, 1995.
Expiration Dates: April 15, 1998, N.J.A.C. 19:46;
April 15, 1996, N.J.A.C. 19:47.

Summary of Public Comment and Agency Response:
COMMENT: The Division of Gaming Enforcement indicated that it did not object to the proposal, and Greate Bay Hotel and Casino, Inc. (Sands Hotel & Casino) indicated that it supported the proposal.
RESPONSE: Accepted.

Executive Order No. 27 Statement

An Executive Order No. 27 analysis and certification is not required because the rulemaking requirements of the Casino Control Commission are dictated by the Casino Control Act, N.J.S.A. 5:12-1 et seq., and are not subject to any Federal requirements or standards.

Full text of the adoption follows:

19:46-1.13B Pai gow poker table; pai gow poker shaker; physical characteristics; computerized random number generator
(a) (No change.)
(b) Each pai gow poker layout shall be approved by the Commission and shall contain, at a minimum, the following:
1. (No change.)
2. Two separate areas located below each betting area which shall be designated for the placement of the high and second highest or low hands of that player;
3. If the casino licensee offers the additional wager authorized by N.J.A.C. 19:47-11.13, a separate area for each player, designated for the placement of that additional wager by each player, as well as the payout odds for the additional wager; and
4. (No change in text.)
(c)-(e) (No change.)

19:47-11.8 Procedures for dealing the cards from a manual dealing shoe
(a) (No change.)
(b) The dealer shall then, using one of the procedures authorized by N.J.A.C. 19:47-11.8C, determine the starting position for dealing the cards. If the casino licensee offers the additional wager authorized by N.J.A.C. 19:47-11.13, all such additional wagers shall be determined and paid and the procedures in N.J.A.C. 19:47-11.13 shall be completed, before any card is dealt to any player at the table.
(c)-(d) (No change.)

You're viewing an archived copy from the New Jersey State Library.

19:47-11.8A Procedures for dealing the cards from the hand

(a)-(d) (No change.)

(e) Once the dealer has completed dealing the seven stacks and placed the four remaining cards in the discard rack, the dealer shall then, using one of the procedures authorized by N.J.A.C. 19:47-11.8C, determine the starting position for delivering the stacks of cards. If the casino licensee offers the additional wager authorized by N.J.A.C. 19:47-11.13, all such additional wagers shall be determined and paid and the procedures in N.J.A.C. 19:47-11.13 shall be completed, before any stack of cards is dealt to any player at the table.

(f)-(g) (No change.)

19:47-11.8B Procedures for dealing the cards from an automated dealing shoe

(a)-(b) (No change.)

(c) The dealer shall then, using one of the procedures authorized by N.J.A.C. 19:47-11.8C, determine the starting position for delivering the stacks of cards. If the casino licensee offers the additional wager authorized by N.J.A.C. 19:47-11.13, all such additional wagers shall be determined and paid and the procedures in N.J.A.C. 19:47-11.13 shall be completed, before any stack of cards is dealt to any player at the table.

(d)-(f) (No change.)

19:47-11.13 Permissible additional wager

(a) If a casino licensee, pursuant to N.J.A.C. 19:47-11.8C, uses a random number generator to determine the starting position for the dealing of cards or the delivery of stacks of cards, the casino licensee may in its discretion offer to every player at the pai gow poker table the option to make an additional wager as to which one of the numbers 1 through 7 will be selected and displayed by the random number generator at the beginning of a round of play.

(b) The following procedures shall be observed by any casino licensee offering the additional wager authorized by this section:

1. Prior to the activation of the random number generator at the beginning of a round of play, any player who has made a pai gow poker wager pursuant to N.J.A.C. 19:47-11.7 may, at the same time, make the additional wager authorized by this section. A player may make an additional wager on more than one number during each round of play.

2. A player shall make an additional wager by placing gaming chips, and if permitted by the casino licensee, a match play coupon, on the number selected by the player in the area designated for additional wagers on the pai gow poker table layout. No verbal additional wagers or cash additional wagers shall be permitted.

3. An additional wager shall win if the number selected by the player in (b)2 above is the same number selected and displayed by the random number generator as the first player position to receive cards during that round of pai gow poker. All other additional wagers shall lose.

4. After the dealer announces "No more bets" and the random number generator selects and displays the position number for that round of play, any losing additional wagers shall be immediately collected by the dealer.

5. Any winning additional wagers shall be paid immediately after collection of any losing additional wagers, and prior to any card being dealt to any player at the table.

6. A casino licensee shall pay off winning additional wagers at odds of no less than 5½ to 1 and no more than 6 to 1, and in accordance with the payout odds imprinted on the pai gow poker table layout; provided however, that payouts for any additional winning wagers shall be rounded down to the nearest whole dollar.

(c) Any additional wager made pursuant to this section shall have no bearing upon any other wager made by a player at the game of pai gow poker.

CORRECTIONS

(a)

THE COMMISSIONER

Bureau of Parole

Adopted New Rules: N.J.A.C. 10A:26

Proposed: October 17, 1994 at 26 N.J.R. 4143(a).

Adopted: January 13, 1995 by William H. Fauver, Commissioner, Department of Corrections.

Filed: January 13, 1995 as R.1995 d.85, **with substantive and technical changes** not requiring additional public notice and comment (see N.J.A.C. 1:30-4.3).

Authority: N.J.S.A. 30:1B-6 and 30:1B-10 and P.L. 1993, c.246.

Effective Date: February 6, 1995.

Expiration Date: February 6, 2000.

Summary of Public Comment and Agency Response:
No comment received.

Summary of Agency-Initiated Changes:

Since the proposal of these new rules, the name of the Correction Officers Training Academy and Staff Development Center has been officially changed to the Thomas M. Cooper Corrections Staff Training Academy and this name change has been made throughout the chapter. Additionally, minor changes in language were made for stylistic and grammatical consistency.

At N.J.A.C. 10A:26-1.3, a definition for "Central Communications Unit" has been added because certain responsibilities found herein are assigned to this Unit instead of the "Parole Duty Desk." The word "certain" as it applies to communication functions has been added to the definition of "Parole duty desk" to make the definitions for "Central Communications Unit" and "Parole duty desk" consistent and to make clear that there are certrain duties assigned to each. The additions of the definition for "Central Communications Unit" and the word "certain" to the definition for the "Parole Duty Desk" are simply reflective of the practice already in effect within the Department and do not alter the duty requirements of affected staff.

The words "and Juvenile" were added to the definition for "parolee" because they were inadvertently omitted from the reference to the Adult and Juvenile Compacts and word "Compact" was changed to "Compacts." Additionally, in the definition for "probable cause" the language "a fair probability" was deleted and replaced with "reasonable grounds of suspicion, supported by circumstance, sufficiently strong to warrant a cautious person" . . . This change is necessary to provide parole officers with a precise and clear meaning which can be applied when probable cause must be determined and neither expands nor curtails the responsibilities of parole officers. The language change was also made in order to be consistent with the definition of probable cause that appears in the New Jersey Division of Criminal Justice, Police Training Commission curriculum that is utilized by the Department of Corrections, Thomas M. Cooper Corrections Staff Training Academy.

At N.J.A.C. 10A:26-1.4, form 844-II INCIDENT REPORT—BUREAU OF PAROLE was deleted from subsection (a) and added to subsection (b) because this form is available by contacting the Bureau of Parole, not the Standards Development Unit. At N.J.A.C. 10A:26-1.4(a), form 172-II was changed to form 172-I to correct a typographical error.

A new section, N.J.A.C. 10A:26-1.5 was added which specifies that the Chief, Bureau of Parole, or his or her designee shall develop and disseminate procedures which are consistent with N.J.A.C. 10A:26. This language is being added because the Chief, Bureau of Parole, or his or her designee currently develops procedures that are regularly forwarded to and reviewed by the Chief of Staff prior to the dissemination of said procedures to parole officers and staff members. The addition of this language does not alter in substance the existing responsibilities of staff of the Department of Corrections.

The words "to include weapons training" were deleted from N.J.A.C. 10A:26-4.1(a), 4.10 and 5.1(b), and N.J.A.C. 10A:26-4.1(a)2 and 5.1(b)2 have been deleted because these courses are part of the Basic Course for Parole Officers and should not be construed as separate courses that are required. N.J.A.C. 10A:26-4.1(a)3 and 5.1(b)3 have been recodified.

You're viewing an archived copy from the New Jersey State Library.

Language at N.J.A.C. 10A:26-4.2(b) which states that a range is approved by the Police Training Commission (P.T.C.) has been deleted because the P.T.C. does not approve ranges for in-service qualification. These ranges must be approved by the New Jersey Department of Corrections.

At N.J.A.C. 10A:26-4.3(c), the language, "unless otherwise instructed by his or her immediate supervisor" has been added to the rule that requires the Parole Officer to carry his or her on-duty firearm on his or her person at all times. The addition of this language will provide for those inevitable situations during which a firearm should not be carried and will sufficiently protect the safety, security and welfare of parole officers, staff and New Jersey citizens. It was an oversight by the Department not to have included regulations that authorize the supervisor to make a determination when a weapon should not be carried. The addition of this language represents the current practice of the Department when caution regarding firearms needs to be taken and does not represent a substantive change.

Language from N.J.A.C. 10A:26-5.3(d) and (e) regarding the official State of New Jersey, Firearms Weapons Card, badge and photo identification card and the maintenance of a master list of parole officers authorized to carry a firearm has been added to N.J.A.C. 10A:26-4.2 as subsections (d) and (e). Current Departmental procedures require that parole officers carry their weapons card, the official badge and photo identification card whenever they are in possession of a firearm notwithstanding the on-duty, off-duty status of said firearm. Additionally, a master list of parole officers authorized to carry a firearm is maintained notwithstanding the on-duty, off-duty status of the firearm. The addition of this language does not alter the current procedures in effect and practiced by staff of the Department of Corrections and therefore does not represent a substantive change.

Language from N.J.A.C. 10A:26-5.10(a) and (b) regarding the reporting of incidents has been added to N.J.A.C. 10A:26-4.3 as subsections (g) and (h) because the reporting of incidents remains the same notwithstanding the on-duty, off-duty status of a firearm. The reporting of incidents involving a firearm, official identification cards and/or badge is an essential practice for maintaining security and safety. The addition of language regarding reporting procedures reflects the current practice of the Department and therefore does not represent additional or new responsibilities for affected Departmental staff.

At N.J.A.C. 10A:26-4.3(c)2, the word "secret" was replaced with "secrete" to correct a typographical error.

At N.J.A.C. 10A:26-4.3(d), the words "baton and chemical agent" were added because these are Departmentally issued weapons that the parole officer would routinely be carrying to and from work. This addition was reviewed as published and the Department of Corrections determined that not only the firearm, but the baton and chemical agent must be authorized to be carried by the parole officer to and from work. The addition of this language simply reflects a routine practice and does not represent a substantive change as far as what the parole officer does or does not already do.

N.J.A.C. 10A:26-4.10 has been codified as subsection (a) and (b) in order to separate annual training from the initial training that is provided as part of the Basic Course for Parole Officers.

At N.J.A.C. 10A:26-4.12(c), the words "Office of the" have been added to Chief, Bureau of Parole, for specificity of where reports are to be sent.

At N.J.A.C. 10A:26-4.12(e) and 5.7(a)3, language referring to the Assistant Chief has been added because in practice the Assistant Chief is the appointed designee when the Chief, Bureau of Parole cannot be notified.

The Department has reviewed language as proposed at N.J.A.C. 10A:26-5.1(f) which specifically refers to shoulder, waist, and ankle holsters and has determined that this reference is too restrictive. The deletion of language referring to the specific use of only shoulder, waist and ankle holsters restricts the Department from being open to the possibility of approving new types of holsters as they become available. The intent of this rule is to stipulate that the off-duty firearm be carried in an approved holster on the body and that all holsters approved by the Department are those types of holsters that are safe and practical. This change is not substantial since the shoulder, waist and ankle holsters are already approved by the Department for use. The change simply reflects the intent of the Department to emphasize that holsters must be approved while allowing the Department to be receptive to the approval of new and advanced holster designs.

At N.J.A.C. 10A:26-5.4(b) and 8.4(a) and (b), reference to the "Parole Duty Desk" has been deleted and replaced with "Central Communications Unit" because the Parole Duty Desk was erroneously identified as the place to report the required information.

Since the Assistant Chief is authorized by job title to hire, terminate or suspend from duty any parole staff member, the word "Assistant" has been added before the word "Chief" at N.J.A.C. 10A:26-5.7(a)3. Also, the language, "his or her designee" has been added at N.J.A.C. 10A:26-5.7(a)5, 5.10(d) and (e) because this accurately reflects the practice of the Chief, Bureau of Parole, who may delegate the referenced duties.

At N.J.A.C. 10A:26-6.1(b), the words "or has violated" have been added to the phrase "is violating a condition of parole." This language has been added because in practice a search may be conducted when the search will produce contraband or evidence that the parolee not only is violating a condition of parole, but also when the parole officer has reasonable suspicion to believe that the parolee has already violated a condition of parole. The addition of this language simply makes clear the presumption that if a parolee has already violated a condition of parole he or she may be subject to a search and as such does not represent a substantive change.

At N.J.A.C. 10A:26-6.3(a)2 and 6.4(a)2, the words "without prior approval from the supervisor" have been added to clarify that approval for searches are not necessary when immediate action searches are necessary. The intention of this addition of language is inferred, however the Department felt the added language would clarify that prior approval is not necessary when immediate action is necessary thereby leaving no room for doubt on this important provision.

At N.J.A.C. 10A:26-6.7, language regarding urine monitoring that refers to specific drug names has been deleted. The intent of this rule is to mandate that urine monitoring shall be conducted for any drug not authorized for possession or use. The Department has reviewed these rules as written and determined that the rule implies that all of the listed drugs will be tested for and this may or may not be necessary in every case. The deletion of these specific drug names does not represent a substantive change since the change clarifies the intent of the Department to test for all unauthorized drugs.

The Department of Corrections has determined that the requirement to have at least one parole officer of the same sex as the inmate(s) or parolee(s) who are being transported does not reflect the actual intent of the Department at N.J.A.C. 10A:26-8.2 which is to regulate the Bureau of Parole with rules that promote the safety, welfare and security of parole officers, inmates and parolees during transport. Therefore, the language at N.J.A.C. 10A:26-8.2(i) is not adopted. In drafting this rule for parole officers, the Department attempted to parallel existing correction officer requirements regarding transportation. The Department has since reviewed this rule as proposed and determined that the duties and functions of the parole officer are not parallel to those of the correction officer in this regard. The purpose of rulemaking for transport of inmates and parolees in custody is not to specify the gender of parole officers, in relation to inmates and parolees, but rather to ensure proper training and use of equipment for parole officers thereby providing for a safe, secure environment. The Department has further determined that non-adoption of this subsection is necessary because as proposed, this provision may not promote safety for the affected individuals and, as such, does not represent the intent of the Department.

Executive Order No. 27 Statement

An Executive Order No. 27 analysis is not required for this adoption because the rulemaking requirements of the Department of Corrections are governed by N.J.S.A. 30:1B-6 and 30:1B-10. The adoption of these new rule is not subject to any Federal requirements or standards.

Full text of the adoption follows (additions to proposal indicated in boldface with asterisks ***thus***; deletions from proposal indicated in brackets with asterisks *[thus]*):

CHAPTER 26
BUREAU OF PAROLE

SUBCHAPTER 1. GENERAL PROVISIONS

10A:26-1.1 Purpose

(a) The purpose of this chapter is to:

1. Establish policies and procedures regarding the use of force by parole officers, while on duty and off-duty;

You're viewing an archived copy from the New Jersey State Library.

2. Establish policies and procedures for the search and urine monitoring of inmates and parolees;
3. Define contraband and establish procedures for contraband seizure and disposal; and
4. Establish policies and procedures regarding the transportation of inmates and parolees.

10A:26-1.2 Scope

This chapter shall be applicable to the New Jersey Department of Corrections, Bureau of Parole, unless otherwise indicated.

10A:26-1.3 Definitions

The following words and terms when used in this chapter shall have the following meanings, unless the context clearly indicates otherwise.

"Bureau of Parole" means the agency within the Department of Corrections which is charged with the preparation, release, and supervision of those offenders who are paroled by the New Jersey State Parole Board; the supervision of parolees from other states who have been accepted under the terms of the Adult and Juvenile Compacts for the Supervision of Parolees and Probationers; the supervision and/or monitoring of inmates assigned to the Electronic Monitoring Program and Furlough Program; the supervision of certain Executive Clemency cases; and any other inmate community program such as the Work Release Program.

"Central Communications Unit" means the centralized communication center within the Department of Corrections which coordinates certain functions of the Department of Corrections on a 24 hour, seven day a week basis.

"Chemical agent" means an aerosol spray which may be used to subdue individuals who resist arrest or for the purpose of self-defense against an attack.

"Contraband" means any item, article or material found in the possession of, or under the control of, an inmate or parolee which is prohibited by conditions of parole and/or community release, or which is prohibited by the Criminal Code of the State of New Jersey.

"Deadly force" means force which is intended to cause, or is likely to cause, death or serious bodily harm.

"Detainer" means a warrant or formal authorization to detain or apprehend an inmate or parolee for prosecution or detention by a Federal, State or local law enforcement agency. Detainers may include, but are not limited to:

1. Adjudicated criminal charges for which sentence has been imposed;
2. Criminal charges resulting from indictment, for which there is no final disposition (open charges);
3. Warrants for violation of parole or probation or executive clemency; and
4. Immigration detainers.

"Electronic Monitoring Program (EMP)" means a program in which an inmate lives in the community and is monitored by an electronic monitoring device.

"Firearm" means any hand gun, rifle, shotgun, machine gun, automatic or semi-automatic rifle, or any gun, device or instrument in the nature of a weapon from which may be fired or ejected any solid projectible ball, slug, pellet, missile or bullet, or any gas, vapor or other noxious thing, by means of a cartridge or shell or by the action of an explosive or the igniting of flammable or explosive substances.

"Internal Affairs Unit" means the unit responsible for conducting investigations at the direction of the Commissioner, New Jersey Department of Corrections.

"Lawfully confined" means custodially confined in a detention facility or county correctional facility or a Department of Corrections' facility.

"Mechanical restraints" means restraining devices such as handcuffs, leg irons, and belly chains.

"Non-deadly force" means force used by the parole officer which is not likely to cause death or serious bodily harm.

"Parole Duty Desk" means the centralized communication center within the Bureau of Parole which coordinates ***certain*** communication functions on a 24 hour, seven day a week basis.

"Parolee" means any person who is subject to the parole jurisdiction of the New Jersey State Parole Board and has been released on parole, or placed under supervision by reason of Executive Clemency, or any person released from another state correctional facility who resides in New Jersey under the terms of the Adult ***and Juvenile*** Compact***s*** for the Supervision of Parolee and Probationers.

"Parole officer" means persons with the following New Jersey Department of Corrections, Bureau of Parole, titles that may be sworn as peace officers:

1. Chief, Bureau of Parole;
2. Assistant Chief, Bureau of Parole;
3. Supervising Parole Officer;
4. District Parole Supervisor;
5. Assistant District Parole Supervisor;
6. Supervisor, Parole Residential Facility;
7. Senior Parole Officer; and
8. Parole Officer Recruit.

"Probable cause" means *[a fair probability]* ***reasonable ground(s) of suspicion, supported by circumstances sufficiently strong to warrant a cautious person*** to believe that criminal activity is taking place.

"Reasonable suspicion" means a belief that an action is necessary based upon specific and articulable facts that, taken together with rational inferences from those facts, reasonably support a conclusion such as that a condition of parole has been or is being violated by a parolee.

"Serious bodily harm" means bodily harm which creates a substantial risk of death or which causes serious, permanent disfigurement or protracted loss or impairment of the function of any bodily member or organ.

"Unlawful force" means force, including confinement, which is employed without the consent of the person against whom it is directed and the use of which is not permitted by law.

"Warrant" means a writ or precept from an authority in pursuance of law, directing the performance of a specified act, and addressed to a peace officer or person competent to perform the act.

"Weapon" means anything readily capable of lethal use or of inflicting serious bodily injury.

10A:26-1.4 Forms

(a) The following forms related to the Bureau of Parole shall be reproduced from originals that are available by contacting the Standards Development Unit, New Jersey Department of Corrections:

1. 156-I OATH OF OFFICE;
[2. 844-II INCIDENT REPORT—BUREAU OF PAROLE;]
[3. 172-II] ***2. 172-I*** CONTINUITY OF EVIDENCE—URINE SPECIMEN.

(b) The following form***s*** related to the Bureau of Parole shall be reproduced from originals that are available by contacting the *[New Jersey Department of Corrections',]* Bureau of Parole***, New Jersey Department of Corrections***:

1. F-19 CHRONOLOGICAL SUPERVISION REPORT*[.]***;***
2. 844-II INCIDENT REPORT—BUREAU OF PAROLE.

10A:26-1.5 Procedures

(a) The Chief, Bureau of Parole, or his or her designee shall be responsible for developing written procedures consistent with this chapter.

(b) All written procedures shall be forwarded to the Chief of Staff, New Jersey Department of Corrections, for review and approval on or before February 15 of each year.

(c) Written procedures developed in accordance with this chapter shall be made available to all parole officers and parole staff members.

SUBCHAPTER 2. (RESERVED)

SUBCHAPTER 3. (RESERVED)

You're viewing an archived copy from the New Jersey State Library.

SUBCHAPTER 4. USE OF FORCE WHILE ON-DUTY

10A:26-4.1 Parole officers authorized to carry firearms while on duty

(a) Prior to being permitted to carry a firearm on duty, parole officers shall:

1. Pursuant to N.J.S.A. 52:17B-66 et seq., have taken and successfully completed the Police Training Commission (P.T.C.) approved Basic Course for Parole Officers *[to include weapons training]* at the *[Correction Officers]* ***Thomas M. Cooper Corrections Staff*** Training Academy *[and Staff Development Center]* of the New Jersey Department of Corrections; ***and***

[2. Have qualified in the use and handling of approved on-duty weapons; and]

*[3.]****2.*** Have been sworn as peace officers by taking the Oath of Office and completing Form 156-I OATH OF OFFICE.

10A:26-4.2 Firearms training, qualification and requalification

(a) As required by N.J.S.A. 2C:39-1 et seq., all parole officers shall be initially trained and shall qualify in the use and handling of approved on-duty and off-duty firearms.

(b) Parole officers shall requalify annually on a range approved by the *[Police Training Commission (P.T.C.)]* ***New Jersey Department of Corrections***.

(c) Only those parole officers who achieve and maintain a minimum score of 80 percent during range qualification and requalification shall be authorized to possess firearms while on-duty and off-duty.

(d) Once a parole officer has qualified on his or her approved firearm, the parole officer shall receive the official State of New Jersey, Firearms Unit Weapons Card. Parole officers shall be required to carry the weapons card, the official badge and photo identification card of the New Jersey Department of Corrections while on duty.

(e) Each Bureau of Parole district office supervisor or his or her designee shall be responsible for preparing and maintaining a current master list of each parole officer authorized to carry a firearm.

1. The master list shall be maintained by the Chief, Bureau of Parole, or his or her designee to indicate the parole officer's firearm qualification date (new or expired), model name and number, and serial number of the authorized firearm.

2. Each time the parole officer registers a firearm with the Chief, Bureau of Parole, or his or her designee, the Chief, Bureau of Parole, or his or her designee, is responsible for comparing the firearm qualification date, firearm model name and number, and firearm serial number contained on the master list against the State of New Jersey, Firearms Unit Weapons Card accompanying the firearms.*

10A:26-4.3 On-duty firearm

(a) The authorized on-duty firearm shall be the responsibility of the parole officer at all times.

(b) The parole officer shall not draw or exhibit his or her firearm except for one of the following circumstances:

1. For maintenance of the firearm;

2. To secure the firearm;

3. When commanded by the firearms staff during training exercises, range practice, qualification or requalification with the firearm; or

4. When circumstances create a reasonable belief that it may be necessary to use the firearm in the performance of the parole officer's duties.

(c) A parole officer while on-duty, shall carry his or her on-duty firearm on his or her person at all times ***unless otherwise instructed by his or her immediate supervisor***. The firearm shall:

1. Remain in the holster while in a rest room; and

2. Not be left in a motor vehicle or other unauthorized location except under unusual or special circumstances, such as when a parole officer must remove his or her on-duty firearm and another authorized Bureau of Parole staff member is unavailable to take custody of the firearm. Under an unusual or special circumstance every effort shall be made to *[secret]* ***secrete*** the firearm within the locked trunk or other locked compartment of the parole officer's motor vehicle.

(d) When off-duty, the parole officer shall be authorized to carry his or her on-duty firearm***, baton and chemical agent*** to and from work.

(e) The parole officer may elect to carry his or her on-duty firearm as his or her sole authorized off-duty firearm.

(f) The parole officer entering any residential or correctional facility of the Department of Corrections shall store his or her firearm at the main correctional facility or at an approved Department of Corrections authorized weapons storage unit.

(g) When an authorized firearm is believed to have been lost or stolen, the parole officer shall report this fact to the local law enforcement authorities and to the Parole Duty Desk of the New Jersey Department of Corrections within three hours from the time the parole officer is aware that the firearm is missing.

(h) When a State of New Jersey, Firearms Unit Weapons Cards, official photo identification card or badge of the New Jersey Department of Corrections is believed to have been lost or stolen, the parole officer shall notify the local law enforcement authorities and the Chief, Bureau of Parole, or his or her designee as soon as practicable.*

10A:26-4.4 Use of force

(a) In any case when a parole officer uses force while on-duty, the parole officer shall only use that force that is objectively reasonable under the totality of the circumstances as known by the parole officer at the time the parole officer uses force.

(b) A parole officer may use the amount of force reasonably necessary to accomplish the law enforcement objective. If the suspect resists, the parole officer may increase the degree of force as necessary to accomplish the law enforcement objective but as soon as the suspect submits, the parole officer shall reduce the degree of force used.

10A:26-4.5 Non-deadly force; when justified

(a) The Department justifies the use of non-deadly force against persons only under the following circumstances:

1. To protect self or others against the use of unlawful force;

2. To protect self or others against death or serious bodily harm;

3. To prevent damage to property;

4. To prevent escape;

5. To prevent or quell a disturbance;

6. To prevent a suicide or attempted suicide;

7. To enforce conditions of parole; or

8. In situations where a supervisor with the title of Assistant District Parole Supervisor or above believes that failure to comply constitutes an imminent threat to security or safety.

(b) Non-deadly force includes the use of chemical agents, batons, and other weapons which are not likely to cause death or serious injury.

10A:26-4.6 Deadly force; when authorized

(a) Deadly force shall be used against persons, except as stated in (b) below, on order of the following:

1. The Commissioner;

2. The Chief of Staff;

3. The Assistant Commissioner, Division of Operations;

4. The Chief, Bureau of Parole; or

5. The Assistant Chief, Bureau of Parole.

(b) The parole officer shall use deadly force against persons when the parole officer reasonably believes that a lesser degree of force will be ineffective, and the person(s) presents an imminent threat of deadly force or serious bodily harm to the parole officer or a third party.

(c) Deadly force may be used in the following situations under limitations consistent with the provisions of the New Jersey Code of Criminal Justice, N.J.S.A. 2C:1-1 et seq.:

1. When the parole officer reasonably believes that deadly force is imminently necessary to protect himself or herself against the use of unlawful force which the parole officer believes may result in death or serious bodily harm;

You're viewing an archived copy from the New Jersey State Library.

2. When the parole officer reasonably believes that deadly force is imminently necessary to protect another against the use of unlawful force which the parole officer believes may result in death or serious bodily harm. However, deadly force is not justifiable if the parole officer can otherwise secure the complete safety of the protected person;

3. When the parole officer reasonably believes that deadly force is immediately necessary to prevent or stop the suspect from committing or continuing a criminal offense which would endanger human life or inflict serious bodily harm upon another person unless the commission or the consummation of the crime is prevented;

4. When the parole officer is authorized to use deadly force to effect an arrest or to prevent the escape of a fleeing suspect if the parole officer has probable cause to believe that the suspect will pose an immediate threat of death or serious bodily harm to human life should the parole officer not take immediate action; and

5. Where the parole officer reasonably believes that deadly force is immediately necessary to prevent the escape of a person committed to a correctional facility for the detention of persons charged with, or convicted of an offense, provided that the parole officer reasonably believes that the force employed creates no substantial risk of injury to innocent persons.

(d) Deadly force includes, but is not limited to, the use of hand guns and other lethal weapons.

(e) Where feasible, before using a firearm, the parole officer shall attempt to identify himself or herself as an officer and state his or her intent to shoot. Warning shots are not authorized.

(f) The parole officer shall not fire his or her firearm from, or at, a moving vehicle, nor engage in any vehicle contact action such as ramming, except as a last resort to prevent imminent death or serious injury to the parole officer or another person where deadly force would otherwise be justified.

(g) The parole officer shall not discharge a firearm if there is a substantial risk of injury to innocent persons.

(h) Whenever feasible, the parole officer shall contact the local law enforcement authorities and district parole office to request assistance before engaging in any use of force that reasonably could result in serious bodily injury.

10A:26-4.7 Use of force against persons other than parolees and inmates

(a) Appropriate force may be used against persons other than parolees and inmates when the parole officer observes what the parole officer believes to be a violation of the law, and when there is also imminent peril of bodily harm to any individual or destruction of property.

(b) Whenever possible, the parole officer shall contact the local law enforcement authorities and district parole office to request assistance before engaging in any use of force.

(c) In situations where a violation of law is suspected, but no imminent danger is present, the parole officer shall immediately contact the local law enforcement authorities and the parole officer's supervisor.

(d) Non-deadly force may be used upon or toward persons other than inmates and parolees only under the following circumstances:

1. To protect self or others against the use of unlawful force;

2. To protect self or others against death or serious bodily harm;

3. To thwart the commission of a crime involving or threatening bodily harm or damage to property;

4. To prevent a suicide or attempted suicide;

5. To prevent an escape, or flight from arrest for a crime; and/or

6. To effect an arrest for any offense or crime.

(e) Deadly force may be used against persons other than inmates and parolees when the parole officer reasonably believes that the person presents an imminent threat of death or serious bodily harm.

10A:26-4.8 Use of mechanical restraints

(a) Authorization for the use of mechanical restraints, except handcuffs, shall be obtained from a supervisor with the title of Assistant District Parole Supervisor or above. If the safety of the parole officer or security is jeopardized, the parole officer, by reason of his or her experience and best judgment, may use mechanical restraints when authorization can not be obtained.

(b) Mechanical restraints may be used on parolees, inmates, and lawfully confined persons in the following instances:

1. When transporting or awaiting transport in custody;

2. When the person's history, behavior, present emotional state or current medical advice indicates the likelihood that bodily injury, damage to property or escape will occur;

3. To prevent self-inflicted injury or injury to others; or

4. To prevent property damage.

(c) At no time shall a person be left without proper supervision while in restraints.

(d) Mechanical restraints shall not be used as punishment, or in any way that causes unnecessary physical discomfort, inflicts unnecessary physical pain, or unnecessarily restricts blood circulation or breathing.

(e) Mechanical restraints shall be removed promptly when the reason for use has ceased to exist or has sufficiently abated.

10A:26-4.9 Use of chemical agents; storage

(a) Only Department of Corrections approved chemical agents shall be used by parole officers.

(b) Whenever chemical agents are used as a means of control the parole officer shall comply with the reporting procedure in N.J.A.C. 10A:26-4.12.

(c) A parole officer is not permitted to carry or use chemical agents unless he or she has received appropriate training and annual retraining in the use and effects of these chemical agents.

(d) After each instance of use, individuals who have been exposed to chemical agents will be provided with medical examination and treatment when necessary.

(e) Chemical agents shall be safely stored, legibly labeled to show the chemical name and expiration date, and properly inventoried to insure security and an adequate unexpired supply.

10A:26-4.10 Training

(a) All parole officers shall annually receive training in proper methods and techniques of using force and in the legal aspects of using force.

(b) Training in proper methods and techniques of using force shall be provided as part of the Basic Course for Parole Officers *[to include weapons training,]* provided at the *[Correction Officers]* ***Thomas M. Cooper Corrections Staff*** Training Academy *[and Staff Development Center]* of the New Jersey Department of Corrections and shall be repeated annually.

10A:26-4.11 Motor vehicle pursuits prohibited

Parole officers shall not become involved in motor vehicle pursuits.

10A:26-4.12 Reports

(a) The parole officer shall immediately contact his or her supervisor and shall write a special report when the parole officer participated in or witnessed an incident in which:

1. A firearm was discharged outside of the firing range;

2. A use of force resulted in death or serious bodily injury; or

3. A suspect alleged that a serious bodily injury had been inflicted.

(b) The report shall contain the following information:

1. A description of the events leading up to the use of force;

2. A description of the incident;

3. The type of force used;

4. The reason for employing force;

5. A list of all participants and witnesses to the incident;

6. A description of the injuries suffered, if any, and medical treatment given; and

7. Other relevant facts or comments about the incident or conduct of employees, parolees, inmates, witnesses or the public.

(c) The parole officer's supervisor shall fax, as soon as possible, all special reports to the Central Office Internal Affairs Unit and the ***Office of the*** Chief, Bureau of Parole for review.

(d) The Chief, Bureau of Parole or his or her designee shall immediately advise the Chief of Staff and the Office of Public

You're viewing an archived copy from the New Jersey State Library.

Information, New Jersey Department of Corrections of the following:

1. A description of the incident;
2. The persons involved;
3. The action taken; and
4. A current assessment of the situation.

(e) In emergency situations, the parole officer's supervisor or his or her designee shall immediately notify the Chief of Staff, the Chief ***or Assistant Chief***, Bureau of Parole, and the Office of Public Information of the New Jersey Department of Corrections.

(f) Within 10 working days following the incident in which force was used, the District Parole Supervisor or his or her designee shall prepare and submit Form 844-II INCIDENT REPORT—BUREAU OF PAROLE along with a copy of the written report from the staff member(s) to the Chief, Bureau of Parole, with copies to:

1. The Commissioner;
2. The Chief of Staff;
3. Assistant Commissioner, Division of Operations;
4. Central Office Internal Affairs Unit; and
5. The Director of Communications, Office of Public Information.

(g) Follow-up reports will be submitted to those persons listed in (f) above.

10A:26-4.13 Penalties for violation

(a) Parole officer or parole staff member action which does not conform to the provisions of this subchapter and any procedures implemented in connection with this subchapter may result in the following:

1. Disciplinary action pursuant to N.J.A.C. 4A:2;
2. Personal, civil or criminal liability;
3. Denial of indemnification; and/or
4. Refusal by the Office of the Attorney General to represent the parole officer or parole staff member.

(b) Decisions regarding (a)3 and 4 above will be made by the Attorney General after an investigation of the facts of the case.

SUBCHAPTER 5. USE OF PERSONAL FIREARMS AND USE OF FORCE WHILE OFF-DUTY

10A:26-5.1 Authorized off-duty firearm, ammunition and holsters

(a) Parole officers shall be authorized only one firearm for off-duty use.

(b) Prior to being permitted to carry a firearm off-duty, parole officers shall meet the following requirements:

1. Pursuant to N.J.S.A. 52:17B-66 et seq., have taken and successfully completed the Police Training Commission (P.T.C.) approved Basic Course for Parole Officers *[to include weapons training]* at the *[Correction Officers]* ***Thomas M. Cooper Corrections Staff*** Training Academy *[and Staff Development Center]* of the New Jersey Department of Corrections*[.]****; and***

[2. Have qualified in the use and handling of approved off-duty firearms; and]

*[3.]****2.*** Have been sworn as peace officers by taking the Oath of Office and completing Form 156-I OATH OF OFFICE.

(c) The firearm intended for use off-duty shall have been obtained and registered pursuant to State and local laws of the State in which the employee lives. Parole officers shall not loan or improperly transfer personal firearms.

(d) The firearm to be carried off-duty shall be approved and authorized by the New Jersey Department of Corrections.

(e) Ammunition for the off-duty firearm shall be approved and authorized by the New Jersey Department of Corrections.

(f) The off-duty firearm shall be carried ***on the body*** in the ***holsters*** approved *[holsters on the body]* ***by the Department of Corrections***. *[Only shoulder, waist and ankle holsters shall be used for off-duty use.]*

(g) Holsters shall hold the firearm firmly when inverted and have no internal clips.

(h) The waist holster is the only holster approved for use while qualifying with the firearm.

(i) A parole officer who elects to use a shoulder or ankle holster for off-duty use shall demonstrate proficiency in the use of that holster during firearms requalification but need not qualify while using the holster.

(j) No purse holsters or holstered firearms in purses are approved.

(k) When a firearm other than a Departmentally issued duty firearm is selected for off-duty use the parole officer shall be responsible for assuming the cost of the firearm, ammunition, holster and for maintaining his or her firearm in a safe and serviceable condition.

10A:26-5.2 Off-duty firearm

(a) The authorized off-duty firearm shall be the responsibility of the parole officer at all times.

(b) The parole officer shall not be authorized to carry his or her off-duty firearm to and from work unless the parole officer elects to carry his or her authorized on-duty firearm as his or her sole authorized off-duty firearm.

(c) The parole officer shall not draw or exhibit his or her firearm except for one of the following circumstances:

1. For maintenance of the firearm;
2. To secure the firearm;
3. When commanded by the firearms staff during training exercises, range practice, qualification, or requalification with the firearm; or
4. When circumstances create a reasonable belief that it may be necessary to use the firearm in conformance with this policy.

10A:26-5.3 Firearms training, qualification and requalification

(a) As required by the N.J.S.A. 2C:39-1 et seq., all parole officers shall be initially trained and shall qualify in the use and handling of approved on-duty and off-duty firearms.

(b) The parole officer shall requalify annually on a range approved by the *[Police Training Commission (P.T.C.)]* ***New Jersey Department of Corrections***.

(c) Only those parole officers who achieve and maintain a minimum score of 80 percent during range qualification and requalification shall be authorized to possess firearms while on-duty and off-duty.

(d) Once a parole officer has qualified on his or her approved personal firearm, the parole officer shall receive the official State of New Jersey, Firearms Unit Weapons Card. The off-duty firearm the parole officer carries shall be the same one identified on the weapons card. Parole officers authorized to carry an off-duty firearm shall be required to carry the weapons card, the official badge and photo identification card of the New Jersey Department of Corrections while carrying their off-duty firearm.

(e) Each Bureau of Parole district office supervisor or his or her designee shall be responsible for preparing and maintaining a current master list of each parole officer authorized to carry an off-duty firearm.

1. The master list shall be maintained by the Chief, Bureau of Parole, or his or her designee to indicate the parole officer's firearms qualification date (new or expired), model name and number, and serial number of the authorized off-duty firearm.

2. Each time the parole officer registers a firearm with the Chief, Bureau of Parole, or his or her designee, the Chief, Bureau of Parole, or his or her designee, is responsible for comparing the firearms qualification date, firearm model name and number, and firearm serial number contained on the master list against the State of New Jersey, Firearms Unit Weapons Card accompanying the personal firearm.

(f) Should the parole officer's authorized personal firearm become unusable, stolen or unserviceable and the parole officer selects a personal firearm different from the one originally qualified for use, the parole officer shall requalify on the different firearm before the weapon can be used. This qualification may be completed prior to the next annual firearms qualification period.

(g) Should a parole officer wish to change his or her authorized personal firearm as a matter of preference, the parole officer shall wait until the next annual firearms qualification period.

You're viewing an archived copy from the New Jersey State Library.

10A:26-5.4 Use of force while off-duty

(a) Although N.J.S.A. 2A:154-4 authorizes parole officers to exercise law enforcement powers, no parole officer is required to exercise these powers or to carry arms during off-duty hours.

(b) Parole officers, while off-duty, shall not become involved with routine law enforcement duties as they apply to local law enforcement agencies. When a parole officer observes what he or she believes to be a violation of the law, the parole officer may take note of the vehicle description(s), license plate number(s), identifying characteristics of person(s) involved, and other relevant information and report such information to the local law enforcement agency having jurisdiction and to the *[Parole Duty Desk]* ***Central Communications Unit*** of the New Jersey Department of Corrections.

(c) In cases where a parole officer has passed the qualifying firearms examination and does elect to carry a firearm off-duty, the utmost discretion shall be exercised by the parole officer to determine when and under what conditions to use reasonable force.

(d) Any use of force while off-duty shall be in accordance with the requirements of this subchapter.

(e) A parole officer shall be deemed to have acted within the scope of his or her employment or in the law and enforcement interest of the State of New Jersey if the parole officer exercises police powers in accordance with the provisions of this chapter.

10A:26-5.5 Use of non-deadly force while off-duty

(a) Whenever non-deadly force is used off-duty, the reasonable force possible under the circumstances shall be used.

(b) Non-deadly force may be used off-duty when the parole officer believes it to be immediately necessary in order to:

1. Protect self or others against the use of unlawful force;
2. Protect self or others against death or serious bodily harm;
3. Prevent a suicide or attempted suicide;
4. Thwart the commission of a crime involving or threatening bodily harm, damage to or loss of property or a breach of the peace;
5. Prevent an escape; or
6. Effect an arrest for any offense or crime under the laws of the State of New Jersey subject to (c) below.

(c) The use of non-deadly force to effect an arrest is only justifiable if:

1. The parole officer makes known his or her identity and the purpose of the arrest; or
2. The parole officer reasonably believes that his or her identity and purpose are otherwise known by, or cannot reasonably be made known to, the person to be arrested; and
3. When the arrest is made under a warrant, the warrant is valid or reasonably believed by the parole officer to be valid.

10A:26-5.6 Use of deadly force while off-duty

(a) Deadly force includes, but is not limited to, the use of firearms and other lethal weapons.

(b) Deadly force may be used in the following situations under limitations consistent with the provisions of the New Jersey Code of Criminal Justice, N.J.S.A. 2C:1-1 et seq.:

1. When the parole officer reasonably believes that deadly force is imminently necessary to protect himself or herself against the use of unlawful force which the parole officer believes may result in death or serious bodily harm;
2. When the parole officer reasonably believes that deadly force is imminently necessary to protect another against the use of unlawful force which the parole officer believes may result in death or serious bodily harm. However, deadly force is not justifiable if the parole officer can otherwise secure the complete safety of the protected person;
3. When the parole officer reasonably believes that deadly force is immediately necessary to prevent or stop the suspect from committing or continuing a criminal offense which would endanger human life or inflict serious bodily harm upon another person unless the commission or the consummation of the crime is prevented;
4. The parole officer is authorized to use deadly force to effect an arrest or to prevent the escape of a fleeing suspect if the parole officer has probable cause to believe that the suspect will pose an immediate threat of death or serious bodily harm to human life should the parole officer not take immediate action; and
5. Where the parole officer reasonably believes that deadly force is immediately necessary to prevent the escape of a person committed to a correctional facility for the detention of persons charged with, or convicted of an offense, provided that the parole officer reasonably believes that the force employed creates no substantial risk of injury to innocent persons.

(c) Where feasible, before using a firearm, the parole officer shall attempt to identify himself or herself as an officer and state his or her intent to shoot. Warning shots are not authorized.

(d) The parole officer shall not fire his or her firearm from, or at, a moving vehicle nor engage in any vehicle contact action, such as ramming, except as a last resort to prevent imminent death or serious injury to the parole officer or another person where deadly force would otherwise be justified.

(e) The parole officer shall not discharge a firearm if there is a substantial risk of injury to innocent persons.

10A:26-5.7 Unauthorized use of personal firearms while off-duty

(a) A parole officer shall not be authorized to carry an off-duty firearm in the following instances:

1. Where N.J.S.A. 2C:39-7 (Persons Convicted of Certain Crimes) is applicable;
2. Where 18 U.S.C. 1202 Appx.—Appendix to the United States Code (Persons Convicted of Certain Crimes) is applicable;
3. When the ***Assistant*** Chief, Bureau of Parole, or a higher official of the Department of Corrections has suspended the parole officer from duty for any violation;
4. When there are pending charges or ongoing investigations of alleged incidents involving the misuse of a firearm; or
5. Any other situation where the Chief, Bureau of Parole, ***or his or her designee,*** may exercise his or her authority to withdraw off-duty firearms privileges, subject to the review by the Chief of Staff of the Department of Corrections.

(b) In any of the instances in (a) above, the State of New Jersey, Firearms Unit Weapons Card shall be turned in to the Chief, Bureau of Parole or his or her designee.

10A:26-5.8 Possession of firearms within a casino or casino simulcasting facility

Pursuant to N.J.A.C. 19:45-1.13, a parole officer shall not possess or be permitted to possess a firearm within a casino or casino simulcasting facility.

10A:26-5.9 Motor vehicle pursuits prohibited

Parole officers shall not become involved in motor vehicle pursuits.

10A:26-5.10 Reporting incidents

(a) When an authorized off-duty firearm is believed to have been lost or stolen, the parole officer shall report this fact to the local law enforcement authorities and to the Parole Duty Desk of the New Jersey Department of Corrections within three hours from the time the parole officer is aware that the firearm is missing.

(b) When a State of New Jersey, Firearms Unit Weapons Card, official photo identification card or badge of the New Jersey Department of Corrections is believed to have been lost or stolen, the parole officer shall notify the local law enforcement authorities and the Chief, Bureau of Parole, or his or her designee as soon as practicable.

(c) Except as outlined in N.J.A.C. 10A:26-5.2(c), the parole officer shall immediately and without exception report to the local law enforcement authorities and the Chief, Bureau of Parole, any incident where the parole officer has displayed, drawn or fired his or her off-duty firearm, or any incident or injury which occurred from the use of the parole officer's firearm.

(d) On the next working day after any incident as described in (a), (b) or (c) above, the parole officer shall report in writing to the Chief, Bureau of Parole, ***or his or her designee,*** the facts of the incident and identifying particulars of the incident. The Chief, Bureau of Parole, ***or his or her designee,*** shall forward the report

You're viewing an archived copy from the New Jersey State Library.

for review to the Chief of Staff, the Office of Public Information, and the Central Office Internal Affairs Unit of the New Jersey Department of Corrections.

(e) The parole officer shall, within three days, report to the Chief, Bureau of Parole, ***or his or her designee,*** in writing whenever a registered authorized off-duty firearm has been sold or is no longer in use.

10A:26-5.11 Penalties for violation

(a) Parole officer actions which do not conform to the provisions of this subchapter and any procedures implemented in connection with this subchapter may result in the following:

1. Disciplinary action pursuant to N.J.A.C. 4A:2;
2. Personal, civil or criminal liability;
3. Denial of indemnification; and/or
4. Refusal by the Office of the Attorney General to represent the parole officer.

(b) Decisions regarding (a)3 and 4 above will be made by the Attorney General after reviewing the facts of the case.

SUBCHAPTER 6. SEARCH AND URINE MONITORING OF PAROLEES AND INMATES

10A:26-6.1 Search of parolees; when authorized

(a) Searches of parolees may be authorized by the New Jersey State Parole Board through the imposition of general or special conditions of parole.

(b) In addition to (a) above, a search of a parolee may be conducted at any time when there is a reasonable suspicion to believe that the search will produce contraband or evidence that the parolee ***has violated or*** is violating a condition of parole.

(c) Searches of parolees shall be carried out in a reasonable manner and shall be reasonably related to the purpose of parole and the function of the parole officer.

(d) The search of a parolee shall be conducted while the parolee is fully clothed and shall include, but is not limited to, the touching of the parolee's body through clothing, a thorough examination into pockets, cuffs and seams, the touching of the parolee's hair, and all personal property within the parolee's immediate control.

(e) A search of a parolee may be conducted by a parole officer of either sex.

(f) Parole officers are not authorized to conduct strip or body cavity searches.

(g) Parolees may be subject to a pat-down of the outer clothing to determine whether they are in possession of a weapon.

(h) Parolees shall be searched prior to being transported.

10A:26-6.2 Search of inmates

Search of inmates shall be conducted in accordance with the applicable provisions of N.J.A.C. 10A:3-5.

10A:26-6.3 Search of a parolee's residence; when authorized

(a) A parole officer may conduct a search of a parolee's residence when:

1. There is a reasonable suspicion to believe that evidence of a violation of a condition of parole would be found in the residence or contraband which includes any item that the parolee cannot possess under the conditions of parole is located in the residence; and
2. The search is approved by the parole officer's supervisor or circumstances exist which require immediate action ***without prior approval from the supervisor***.

(b) Where the residence is jointly owned or shared by a parolee and another person(s), the parole officer:

1. May search all objects that appear to be owned or possessed by the parolee;
2. May search any area of the residence or objects that are jointly shared by both the parolee and the other person, even if that person(s) objects to the search; and
3. May not search any area that is exclusively under the control of the other person(s) unless that person(s) voluntarily consents to the search.

(c) A parole officer shall not enter the home of a third party to search for a parolee without having a search warrant unless:

1. The parole officer reasonably believes that the parolee resides at that address; or
2. The home owner voluntarily consents to the search.

10A:26-6.4 Search of a motor vehicle; when authorized

(a) A parole officer may stop and conduct a search of a motor vehicle owned by a parolee or a motor vehicle not owned but driven by a parolee when there is a reasonable suspicion to believe that:

1. Evidence of a violation of a condition of parole would be found in the motor vehicle or contraband which includes any item that the parolee cannot possess under the conditions of parole is located in the vehicle; and
2. The search is approved by the parole officer's supervisor or circumstances exist which require immediate action ***without prior approval from the supervisor***.

(b) A parole officer may stop, but shall not conduct a search of a motor vehicle when the parolee is a passenger in a motor vehicle that is owned and driven by another person unless:

1. The parole officer has probable cause to believe that evidence or contraband is located in the motor vehicle or the owner of the motor vehicle voluntarily consents to the search; and
2. The search is approved by the parole officer's supervisor or circumstances exist which require immediate action.

10A:26-6.5 Search of objects in a motor vehicle

(a) In an authorized motor vehicle search, a parole officer may search all objects that appear to be owned or possessed by the parolee.

(b) In an authorized motor vehicle search, a parole officer may search all objects that are jointly shared by both the parolee and other person(s) in the motor vehicle even if that person(s) objects to the search.

(c) In an authorized motor vehicle search, a parole officer shall not search any objects that are exclusively owned or possessed by other person(s) in the motor vehicle unless:

1. The parole officer has probable cause to believe that contraband is contained within the property of the other person(s); or
2. The other person(s) voluntarily consents to the search.

10A:26-6.6 Reports

(a) The parole officer shall record incidents in which a search of a parolee, inmate, residence or vehicle was conducted on Form F-19 CHRONOLOGICAL SUPERVISION REPORT.

(b) Form F-19 shall contain a minimum of the following information:

1. A description of the events leading up to the search;
2. The parole officer's reasonable suspicion and basis for the search;
3. A description and the disposition of any items, articles, or materials determined to be contraband found as a result of the search; and
4. Any other relevant facts or comments about the search.

10A:26-6.7 Urine monitoring

(a) Urine monitoring shall be conducted for the purpose of deterring the use of, or to detect the presence of, *[opiates, methadone, barbiturates, amphetamines, cocaine, tranquilizers, darvon, marijuana, alcohol or]* any *[other]* drug not authorized for possession or use by the inmate or parolee.

(b) Inmates or parolees shall be required to submit urine for analysis when:

1. Mandated by special condition of the New Jersey State Parole Board or the Bureau of Parole of the New Jersey Department of Corrections; or
2. The parole officer believes, based upon his or her education and experience, that there is a reasonable factual basis to suspect the inmate or parolee of using drugs or alcohol.

10A:26-6.8 Collection, storage and analysis of urine samples

(a) Each time a urine specimen is collected for the reasons stated in N.J.A.C. 10A:26-6.7, Form 172-I CONTINUITY OF EVIDENCE—URINE SPECIMEN shall be completed and sub-

You're viewing an archived copy from the New Jersey State Library.

mitted with the urine sample to the parole officer's district parole office which is responsible for maintaining custody over the specimen until transfer to the testing facility.

(b) The inmate or parolee shall not be considered in violation of parole condition for refusal to provide a urine sample unless that inmate or parolee has been given a reasonable physical opportunity to comply with such order.

1. For the purposes of this section, a reasonable physical opportunity shall constitute a two hour period from the time of the initial order.

2. The inmate or parolee shall not be deemed to have complied with the order to submit a urine sample unless he or she voids the sample in the presence of the parole officer or parole staff member.

(c) Urine samples taken from parolees or inmates shall be voided directly into an approved specimen bottle in the presence of at least one parole officer or parole staff member of the same sex as the parolee or inmate.

1. A minimum of 50 milliliters (two ounces) must be voided in order to provide an adequate sample.

2. The specimen bottle shall immediately be closed, labeled and sealed in the presence of the parolee or inmate by the parole officer or parole staff member.

3. The label shall indicate the parolee's or inmate's name and number, the district parole office to which the parolee or inmate is assigned, the name of the parole officer or parole staff member who witnessed the voiding of the sample, the date and time of the sample, and any prescription medication that the parolee or inmate is currently taking, and the parolee's or inmate's signature.

(d) The parole officer or staff member who signs the label as witness shall, as soon as reasonably practicable:

1. Record on Form 172-I the date and time the parole officer or parole staff member received the sample, the parolee or inmate from whom the urine sample was received, and the date and time of the urine sample placement into a storage container and/or locked refrigerator or freezer;

2. Place the urine sample in a storage container and/or locked refrigerator or freezer; and

3. Deliver the urine sample to the district parole office which is responsible for maintaining custody over the specimen until transfer to the testing facility;

(e) The date and time of the removal of the urine sample from the district parole office as well as the date and time of urine sample receipt by the testing facility shall be noted on Form 172-I by the person(s) performing these functions.

(f) The Department of Corrections shall not proceed with testing any urine sample for drugs or alcohol unless the urine sample arrives at the laboratory in a sealed and approved specimen bottle.

(g) All urine monitoring shall be accomplished in a professional and dignified manner with maximum courtesy and respect being given to the parolee or inmate.

SUBCHAPTER 7. CONTRABAND AND DISPOSITION OF CONTRABAND

10A:26-7.1 Procedures for handling contraband upon discovery

(a) Whenever an item, article or material is determined to be contraband pursuant to N.J.A.C. 10A:3-6 for inmates or N.J.A.C. 10A:26-1.3 for parolees, the contraband shall immediately be seized.

(b) The parole officer making a seizure of contraband from a parolee shall submit the criminal contraband to the local law enforcement jurisdiction or county prosecutor's office.

(c) The parole officer making a seizure of contraband from an inmate shall do so in accordance with the applicable provisions of N.J.A.C. 10A:3-6.

(d) The parole officer shall record the incident including the type, amount and disposition of the contraband on Form F-19, CHRONOLOGICAL SUPERVISION REPORT.

(e) Precautions shall be taken to assure the continuity of possession of contraband in accordance with accepted legal procedures.

SUBCHAPTER 8. TRANSPORTATION OF PAROLEES AND INMATES IN CUSTODY

10A:26-8.1 Use of State owned and privately owned vehicles

(a) Inmates and parolees shall be transported in State owned vehicles, except in emergencies when no such vehicle is available.

(b) In emergencies when no state vehicle is available and the parole officer chooses to transport parolees in a privately owned vehicle, the parole officer shall secure prior approval to transport parolees or inmates in the privately owned vehicle from the Chief, Bureau of Parole, or his or her designee. If approval is granted, the parole officer shall be:

1. Made aware of Departmental policy regarding the use of private vehicles and the liability provisions currently applicable as established by the Division of Budget and Accounting of the New Jersey Department of the Treasury; and

2. Required to furnish proof that the privately owned vehicle is properly licensed, registered and insured.

(c) When escorting parolees or inmates the parole officer shall carry in his or her possession a valid drivers license.

10A:26-8.2 Transport of parolees and inmates in custody

(a) State owned vehicles used to escort parolees and inmates in custody shall be equipped with protective screening devices to separate parolees and inmates from the driver.

(b) Opening devices on the inner rear doors and windows of State owned passenger sedans shall be made inoperable for parolees and inmates.

(c) The rear door locking mechanism of the State owned vehicle shall be modified so that it is redirected, making it accessible to the parole officer only when the front door is open.

(d) The standard State owned passenger sedan or van shall be used only in lieu of more secure but unavailable vehicles.

(e) Vehicles used to transport parolees and inmates in custody shall be thoroughly searched for contraband by the transporting parole officer(s) before and after being used.

(f) Parole officers escorting parolees or inmates shall be provided with necessary mechanical restraints which shall be used in accordance with N.J.A.C. 10A:26-4.8.

(g) Parole officers escorting parolees and inmates in custody shall be armed with Department of Corrections' authorized weapons and ammunition. Any use of force shall be governed by N.J.A.C. 10A:26-4.

(h) When escorting parolees and inmates in custody, the ratio of escorting parole officers to parolees or inmates shall be two parole officers for one parolee or inmate, two parole officers for two parolees or inmates, and three parole officers for three parolees or inmates.

[(i) When transporting parolees and inmates, at least one parole officer shall be of the same sex as the parolee(s) or inmate(s) being escorted. Additional parole officers may be assigned regardless of gender.]

*[(j)]***(i)*** Only properly trained parole officers shall transport parolees and inmates in custody. Such parole officers shall have been fully trained in the following areas:

1. Use of weapons and mechanical restraint equipment; and

2. Effective search for contraband of parolees and inmates, their personal property and transportation vehicles.

*[(k)]***(j)*** Searches of parolees and inmates being transported shall be conducted in accordance with N.J.A.C. 10A:26-6.1.

10A:26-8.3 Escorting procedures for parolees and inmates

(a) The parolee(s) or inmate(s) shall be carefully guarded to prevent escape and receipt of contraband.

(b) No communication between the parolee(s) or inmate(s) and the public shall be permitted at any time during escort.

(c) A parolee's or inmate's special requests during escort not related to the purpose of the trip shall not be honored.

10A:26-8.4 Emergencies

(a) The parole officer shall immediately notify the *[Parole Duty Desk]* ***Central Communications Unit*** of the New Jersey Depart-

You're viewing an archived copy from the New Jersey State Library.

ment of Corrections if an emergency arises during the transportation of a parolee or inmate.

(b) If time or other considerations make it impossible to contact the *[Parole Duty Desk]* ***Central Communications Unit***, the local police authorities shall be notified by the parole officer without prior clearance.

10A:26-8.5 Medical transportation

(a) In emergency situations when a non-ambulatory parolee or inmate in custody is in need of hospitalization or treatment, the parolee or inmate shall be transported by ambulance, or by a State owned vehicle if an ambulance is unavailable. A State owned vehicle shall be used to transport an ambulatory parolee or inmate who is in need of hospitalization or treatment.

(b) When a parolee or inmate in custody is transported by ambulance, the parole officer shall accompany the parolee or inmate in the ambulance and another parole officer shall follow the ambulance in a backup car.

(c) When a parolee or inmate in custody is transported in a State owned vehicle, the ratio of escorting parole officers to parolees and inmates shall be governed by N.J.A.C. 10A:26-8.2.

(d) The use of mechanical restraints and equipment when transporting a parolee or inmate in custody for hospitalization or treatment shall be governed by N.J.A.C. 10A:26-4.8 and the nature of the illness or injury.

INSURANCE

(a)

DIVISION OF FINANCIAL EXAMINATIONS

Admissions Requirements for Foreign and Alien Life and Health Insurers

Adopted New Rules: N.J.A.C. 11:2-1

Proposed: November 21, 1994 at 26 N.J.R. 4586(a).
Adopted: January 13, 1995 by Andrew J. Karpinski, Commissioner, Department of Insurance.
Filed: January 13, 1995 as R.1995 d.80, **without change**.
Authority: N.J.S.A. 17:1C-6(e) and (i); 17:1-8 and 8.1; 17B:17-1 et seq.; 17B:23-1 et seq.; and 17B:23-5.
Effective Date: February 6, 1995.
Expiration Date: November 30, 1995.

Summary of Public Comments and Agency Responses:
No comments received.

Executive Order No. 27 Statement

An Executive Order No. 27 analysis is not required because N.J.A.C. 11:2-1 is not subject to any Federal requirements or standards.

Full text of the adoption follows:

SUBCHAPTER 1. ADMISSION REQUIREMENTS FOR FOREIGN AND ALIEN LIFE AND HEALTH INSURERS

11:2-1.1 Purpose

This subchapter establishes the procedures, requirements and standards which govern the application of foreign and alien insurers engaged in the business of life and health insurance for a certificate of authority to transact the business of insurance in this State.

11:2-1.2 Scope

This subchapter applies to all foreign and alien insurers that apply for a certificate of authority to transact the business of life and health insurance in this State. The filing requirements contained in this subchapter shall not apply to the continuation, renewal or timely reinstatement of existing certificates of authority except where the Commissioner, pursuant to law, shall otherwise require.

11:2-1.3 Definitions

The following words and terms, when used in this subchapter, shall have the following meanings, unless the context clearly indicates otherwise.

"Commissioner" means the Commissioner of the Department of Insurance of this State.

"Committee on Admissions" means the advisory committee within the Department appointed by the Commissioner to aid in the review of applications for admission to transact the business of insurance in this State and to render to the Commissioner recommendations as to the disposition of such applications.

"Department" means the Department of Insurance of this State.

"IRIS" means the NAIC Insurance Regulatory Information System.

"NAIC" means National Association of Insurance Commissioners.

11:2-1.4 General eligibility requirements

(a) In order for a foreign or alien insurer to be admitted as a life and health insurer in this State, the requirements in this section shall be satisfied in addition to any other requirements in this subchapter or any other provision of law.

1. The applicant shall satisfy the Commissioner that its condition or methods of operation are not such as would render its operation hazardous to the public or its policyholders in this State. In determining whether a hazardous financial condition exists, the factors identified in N.J.A.C. 11:2-27.3 shall be considered. A hazardous financial condition shall exist when those factors indicate, either singly or in combination of two or more, that the financial condition of any applicant which has applied to transact, or is already transacting the business of insurance in any jurisdiction, is considered by the Commissioner to be hazardous to the policyholders, stockholders, claimants, creditors, or the general public. The Commissioner shall further consider any other fact or circumstance that indicates that an insurer's operations may be hazardous.

2. The applicant shall satisfy at least the minimum capital and surplus requirements of a similar domestic insurer of this State for all lines of insurance that it is authorized to write pursuant to the certificate of authority issued by its place of domicile, whether or not the applicant desires to transact any of those lines of insurance in this State, subject to the following:

i. In determining whether an applicant meets the minimum capital and surplus requirements, the following shall be deducted from unassigned funds:

(1) The statement value of any and all special deposits not held for the protection of all policyholders;

(2) Reserves and losses reinsured with companies not authorized in New Jersey, accredited as reinsurers in New Jersey, or otherwise in compliance with N.J.S.A. 17:51B-1 et seq., net of any offsets;

(3) The statement value for the portion of assets held in excess of investment limitations for life and health insurers pursuant to N.J.S.A. 17B:20-1 et seq.;

(4) Reserve shortfalls caused by the company holding reserves weaker than those mandated by N.J.S.A. 17B:19, or such other standards provided by administrative rule, actuarial guidelines, or determined necessary by actuarial analysis;

(5) The excess of the statement value over the market value of bonds held by the applicant; and

(6) Off balance sheet guarantees and contingent liabilities for which the company has not previously established a liability in an appropriate amount.

ii. Capital and surplus requirements may be reduced to the level required for the kinds of insurance actually being marketed if the applicant:

(1) Does not transact one or more of the kinds of insurance contained in the certificate of authority issued by its state or country of domicile; and

(2) Submits a resolution by its board of directors stating that it will refrain from transacting the kind(s) of insurance permitted by the certificate of authority issued by its state or country of domicile.

3. The applicant shall be deemed ineligible if any one of the following conditions exist:

You're viewing an archived copy from the New Jersey State Library.

i. An applicant which has received from the NAIC a "first priority" designation for the calendar year next preceding its application date shall not be considered for admission until such designation has been removed by the NAIC;

ii. An applicant which is a member of an insurance holding company system, where its parent or subsidiary has received from the NAIC a "first priority" designation, shall not be considered for admission until such designation has been removed by the NAIC; or

iii. An applicant which has total adjusted capital of less than its company action level risk-based capital or which has otherwise triggered a company action level event, as these terms are defined in N.J.A.C. 11:2-39, as of December 31 of the preceding calendar year, shall not be considered for admission until the applicant's status has improved.

4. The applicant shall be deemed to have its application deferred if any one of the following conditions exist:

i. An applicant which has been identified as "second or third priority" and/or has failed four or more IRIS tests shall have its application deferred until it has demonstrated to the Commissioner and its place of domicile that the IRIS test results are not indicative of a financial condition that may be hazardous to the policyholders, stockholders, claimants, creditors or the general public; or

ii. An applicant which has failed to file with the NAIC an annual statement for the prior year shall have its application deferred until it has filed with the NAIC such annual statement.

5. The applicant shall satisfy the following seasoning requirements:

i. Subject to the provisions of this subchapter, no applicant shall be considered for a certificate of authority to transact the business of insurance in this State unless the Commissioner has been furnished with evidence that the applicant has been authorized by its state or country of domicile to engage in the kind(s) of insurance business for which the applicant seeks a certificate of authority, and has in fact been actively, continuously and successfully engaged in such business, without a change in control, for a period of at least five years prior to the date of the application for the New Jersey certificate of authority.

ii. An applicant qualified under (a)5i above shall demonstrate that:

(1) During any three of the last five years, including therein the two most recent years of business operations, it generated a net gain from operations, after Federal taxes, as reported in the annual statement;

(2) Surplus has not decreased over the five-year period in question except for dividends to policyholders, reserve strengthening and increases in the asset valuation reserve; and

(3) It has received either an evaluation acceptable to the Department from Dun and Bradstreet or one of the top three ratings from one of the following: Standard and Poor's, Duff and Phelps, Moody's, A.M. Best or other nationally recognized rating agency.

iii. The Commissioner may, upon request of an applicant, on a case by case basis, waive in the case of (a)5iii(1), (2) and (3) below, or reduce in the case of (a)5iii(1) below, the five-year seasoning requirements of (a)5i and ii above. In determining whether a reduction or waiver is appropriate in a particular case, the Commissioner shall consider whether the requirements of this section have been satisfied, and, in addition, whether the requirements described in (a)5iii(1) through (4) below, if applicable, have been satisfied. These requirements relate, respectively, to the following circumstances:

(1) The applicant is a wholly-owned subsidiary of a life and health insurer which has been authorized to transact the business of insurance in this State for at least five years or is an affiliate of a life and health insurer which has the same ultimate parent and which has been authorized to transact the business of insurance in this State for at least five years. The Commissioner shall be satisfied as to the financial condition and methods of operation of the authorized insurer who shall effectively guaranty, by a resolution in a form prescribed by the Commissioner and passed by its board of directors, the minimum capital and surplus requirements required by law of the applicant during the first 10 years of its operation in this State. In the case of an authorized affiliate with the same ultimate parent, the Commissioner may require that the guarantee be provided by the ultimate parent. The applicant shall also be required to demonstrate a sound plan of operation and that surplus has not decreased over the five-year period in question, or such shorter time as the applicant has been operating under current control, except as provided in (a)5ii(2) above.

(2) The applicant is a wholly-owned subsidiary of an insurer which has been authorized to transact the business of insurance in this State for at least one year, and secured admission into this State by having been in operation for at least five years pursuant to (a)5i and ii above. The Commissioner shall be satisfied as to the financial condition and methods of operation of the authorized insurer, which shall effectively guaranty, by a resolution in a form prescribed by the Commissioner and passed by its board of directors, the minimum capital and surplus requirements required by law of the applicant during the first 10 years of its operation in this State. The insurer parent shall also be required to have either an evaluation acceptable to the Department from Dun and Bradstreet, or one of the top two ratings from at least one of the following: Standard and Poor's, Duff and Phelps, Moody's, A.M. Best or other nationally recognized rating agency.

(3) The applicant is the continuing corporation resulting from a merger or consolidation of insurers, at least one of which has been authorized in this State to transact the kind(s) of insurance business for which the applicant seeks a New Jersey certificate of authority and has been actively engaged in such insurance business for at least five years and is currently in good standing. The applicant shall also be required to demonstrate a sound plan of operation.

(4) The applicant, being an insurance company with a non-insurance company parent, has completed three full years of operation without a change in control, and, subsequent to its first two years of operation, has available a filed examination report conducted by its state of domicile, which report is in accordance with Department standards for examinations. The first two full years of operation covered by the examination report shall be sufficient to make the report useful and meaningful to the Department. The applicant shall also be required to have experienced profitable operations in two of the three years, including the most current year of business, and shall demonstrate a sound plan of operation. Additionally, the applicant shall obtain or satisfy all of the following:

(A) A financial guaranty from its ultimate parent, in a form prescribed by the Commissioner, that the applicant will maintain the minimum capital and surplus required by law for a period of 10 years from the date of admission;

(B) The ultimate parent must be a United States corporation actively engaged in business for a period of not less than five years prior to the date of application for the New Jersey certificate of authority;

(C) The ultimate parent shall have either an evaluation acceptable to the Department from Dun and Bradstreet or one of the top two ratings from at least two of the following for at least three years prior to application: Standard and Poor's, Duff and Phelps, and Moody's; and

(D) The ultimate parent shall have a net worth of at least $25,000,000, excluding investments in insurance or insurance related subsidiaries, which amount shall be set by the Commissioner upon his or her consideration of the general financial condition of the parent and relevant underwriting factors such as, but not limited to, the volume to be written and the type of risk, and any other factors which the Commissioner, in his or her discretion, shall consider to be appropriate.

iv. The Commissioner may initiate proceedings to revoke authorization for non-compliance with the requirements set forth in (a)5iii above.

6. The applicant shall procure a New Jersey certificate of authority by establishing compliance with the applicable requirements of N.J.S.A. 17B:17-1 et seq. and 17B:23-1 et seq. relating to authorization of foreign and alien insurers to transact the business of life and health insurance in this State, and by successfully complet-

You're viewing an archived copy from the New Jersey State Library.

ing an admissions process which shall include a detailed review by the Commissioner of the business affairs and financial condition of the applicant as provided by this subchapter.

(b) An applicant shall submit a letter of intent consisting of the preliminary information set forth in N.J.A.C. 11:2-1.5 prior to making a formal application for admission.

11:2-1.5 Letter of intent

(a) Prior to the acceptance of a final application for a certificate of authority in this State, all foreign and alien insurers who desire to transact the business of life and health insurance in this State shall submit, as a preliminary application, a letter of intent, which shall include, where applicable, the information required in (a)1 through 9 below.

1. The name of the applicant;

2. The name of any person, as defined in this subchapter, or other entity, by whom the applicant is controlled;

3. The applicant's insurance holding company registration statements including the holding company systems chart for the most recent five years;

4. The name of any insurer(s) currently licensed, or applying for admission, in this State with whom the applicant is affiliated;

5. The kind(s) of insurance proposed to be written by the applicant in this State;

6. A certified copy of the applicant's most recent annual statement, prepared on the NAIC annual statement forms used by New Jersey domestic insurers;

7. A certified copy of the applicant's current certificate of authority from its place of domicile;

8. The results of the most recent NAIC IRIS tests and related communications concerning the applicant, which shall satisfy the requirements of N.J.A.C. 11:2-1.4(a)4i-ii; and

9. The risk-based capital report as of December 31 for the calendar year next preceding its application date, as filed with the insurance regulatory official of its state of domicile. If the state of domicile does not have a risk-based capital statute or regulation substantially similar to N.J.A.C. 11:2-39, the applicant shall submit a risk-based capital report prepared in accordance with N.J.A.C. 11:2-39.

11:2-1.6 Final application

(a) After the submission of the letter of intent as required by N.J.A.C. 11:2-1.5, the applicant, upon notice from the Department, shall file the following items:

1. A copy of its charter as currently in force, certified by the lawful custodian of the original document;

2. A copy of its bylaws as currently in force, certified by a senior officer of the insurer;

3. Seven copies of the current annual statement, including all supplemental exhibits;

4. One copy of the annual statement for each of the past four years, including all supplemental exhibits;

5. An analysis of par/non-par profits and surplus;

6. A certificate of valuation, certified by the insurance commissioner of the insurer's state or country of domicile;

7. A certificate of compliance certified by the insurance commissioner of the insurer's place of domicile;

8. A certified copy of a report of the most recent examination of the insurer's affairs by the Department or its equivalent, of the place in which the insurer is domiciled;

9. A document appointing the Commissioner as attorney for service of process;

10. An application for admission, on a form to be prescribed and provided by the Department, including the payment of a nonrefundable application fee of $5,000 for an admissions application and $2,500 for an application for an extension of authority;

11. A copy of the applicant's quarterly financial statements for the current year, in the NAIC format, and for such other periods of time as shall be required by the Commissioner;

12. Where applicable, a certified copy of the filing made pursuant to the holding company act of the place of domicile, for the last fiscal period, supplemented as necessary to meet the requirements of N.J.S.A. 17:27A-3(a) and (b) and applicable Securities and Exchange Commission filing requirements;

13. A statement of ownership of the applicant which shall include all shareholders of record who control five percent or more of the outstanding shares of the applicant, directly or indirectly;

14. A copy of any agreements by which the right to conduct or influence any of the affairs of the applicant is transferred to others;

15. Any employment or deferred compensation agreements in which any officer, director or shareholder who controls five percent or more of the outstanding shares of the applicant, directly or indirectly, participates;

16. Any tender offer materials (advertisements, invitations, etc.) if any tender offer has been made by the insurer or its parent to acquire another company within the three years preceding;

17. Biographical affidavits, to be completed by all directors and senior officers on a form prescribed and provided by the Department;

18. A calculation of adjusted surplus as described in N.J.A.C. 11:2-1.4(a)2i and completed in accordance with the instructions and worksheets provided by the Department;

19. Details of any circumstances within the past three years where the applicant has received a rating of less than one of the top three ratings from any rating agency or an indication that less than one of the top three ratings would be given if published;

20. A corporate plan of operation consisting of:

i. A schedule listing the following:

(1) All jurisdictions in which the applicant has applied for authorization to transact the business of insurance during the preceding 10 years and the dates and results of such applications;

(2) All jurisdictions from which the applicant has withdrawn during the preceding 10 years, and the reasons for withdrawal; and

(3) All administrative, civil or criminal actions, orders, proceedings and determinations thereof to which the applicant, or its affiliates, or any of its directors or principal officers has been subject, due to an alleged violation of any law governing insurance operations in any jurisdiction during the preceding 10 years. Where the alleged violation is a felony (or its equivalent in a jurisdiction which does not use this designation of a crime) such actions, orders, proceedings and determinations shall include violations not related to insurance operations. If a license has been refused, suspended or revoked by any jurisdiction, the applicant shall furnish an explanation and a copy of any orders, proceedings, and determinations related thereto;

ii. A description of the applicant's present business plan(s) for conducting an insurance business, including, but not limited to:

(1) Geographical areas in which business is being written;

(2) The types of insurance to be written;

(3) Marketing methods;

(4) A summary of the methods of establishing premium rates;

(5) Investment strategy, including a description of controls in place to ensure that the strategy is followed;

(6) Five-year financial projections including premium volume and income by line of business; capital, surplus and risk-based capital levels; and

(7) A description of agency systems, including any managing general agency contracts;

iii. A description of the applicant's proposed plan for conducting an insurance business in this State, including, but not limited to:

(1) The geographical area in which business is intended to be done;

(2) The types of insurance intended to be written;

(3) Proposed marketing methods;

(4) Proposed methods for the establishment of premium rates;

(5) A five-year forecast of anticipated premiums in this State by line of business; and

(6) Proposed agency systems;

iv. A summary of the applicant's reinsurance program on assumed business, indicating the name of the ceding insurers, retentions, maximum risks, types of business, types of agreements, and any other information which may, in the opinion of the Department, be rele-

You're viewing an archived copy from the New Jersey State Library.

vant to this part of the applicant's operations. Additional information may be requested by the Department in order to supplement or clarify information already provided by the applicant;

v. A summary of the applicant's reinsurance program on ceded business, indicating the name of the reinsurers, retentions, maximum risks, types of business, types of contracts, and any other information which may, in the opinion of the Department, be relevant to this part of the applicant's operations. Additional information may be requested by the Department in order to supplement or clarify information already provided by the applicant;

vi. The number and ratio of complaints as defined by the place of domicile to the number of policies in the place of domicile, for those lines of business in which the state or country of domicile makes such determinations; and

vii. Copies of all management, exclusive agency, administrative services, or any other operating contracts with affiliates or non-affiliates, where applicable, signed by the parties and certified to by the insurer's secretary and chief operating officer;

21. If the applicant is a foreign insurer, evidence of a certificate of deposit, certified by the commissioner of the place of domicile, confirming the deposit made therewith and that such deposit satisfies the requirements of the insurer's place of domicile;

22. If a United States branch of an alien insurer, the applicant shall provide the Department with:

i. A certificate of deposit certified by its insurance commissioner showing the amount in trust for policyholders which shall be sufficient to satisfy the requirements of N.J.S.A. 17B:22-3;

ii. A certified copy of power of attorney in favor of its United States manager; and

iii. A certified copy of a deed of trust to the trustee of the applicant's funds; and

23. If the applicant is an alien insurer, a statement of trusteed surplus in the United States.

11:2-1.7 Review procedures; appeals

(a) Upon receipt of a final application, the Commissioner shall conduct a thorough background investigation and review which shall include the information contained in N.J.A.C. 11:2-1.4, 1.5 and 1.6, inquiries regarding claims settlement practices and any other information which, in the opinion of the Commissioner, may be necessary to make an appropriate decision regarding the application.

(b) The applicant shall ensure that all filings submitted to the Department are current. Any amendment, changes or replacements to documents on file shall be timely updated.

(c) Applications accepted after November 1 of each year shall not be reviewed until the next annual statement becomes available and is received for review. The review of such applications shall begin as of April 1 of each year, after the receipt of annual statements which shall be submitted no later than March 1 of each year.

(d) Before a decision on an application is made, the Department may request from an applicant, in writing, any additional information it may require. Failure by an applicant to respond to written inquiries by the Department within 45 days may be considered grounds for rejection of the application.

(e) Application reviews shall be conducted by the Department on a monthly basis. The Department's Committee on Admissions shall make a recommendation to the Commissioner concerning each application which has been reviewed. The Commissioner shall consider the recommendation and make his or her decision on the application within 10 working days from receipt of the recommendation. Written notice of the decision shall be mailed to the applicant by certified mail within 10 working days of the date of the Commissioner's decision.

(f) When the Commissioner rejects an application, the notice of rejection shall include a statement specifying the reasons for the rejection. Such notice shall inform the applicant of the right:

1. To request an informal Departmental review of the rejection within 20 days of receipt of the notice of rejection; and

2. To provide the Department with a written statement, including supporting documentation, if any, disputing with specificity the reasons for rejection within 30 days of the receipt of the notice of rejection.

(g) Upon timely receipt of the request for Departmental review and the written statement of the applicant, if any, the Department shall promply review the application, attached documents, Department records and the written statement. In appropriate circumstances, the Commissioner may provide the applicant with an opportunity to present its position in person. If, after reviewing the record, the Commissioner determines that the applicant has failed to qualify, the Commissioner shall promptly so inform the applicant.

(h) Where an application has been rejected, the applicant shall not be eligible to reapply until there is one full year or more of acceptable experience.

11:2-1.8 Compliance

This subchapter shall apply to all applicants submitting a letter of intent on or after April 1, 1995. Applicants whose applications have been received by the Department prior to April 1, 1995, may elect to proceed under this subchapter if they so notify the Department no later than May 1, 1995. Applicants whose letters of intent have been received by the Department prior to April 1, 1995, who do not timely notify the Department that they wish to proceed under this subchapter, shall have their application reviewed under the procedures preexisting this subchapter.

11:2-1.9 Severability

If any provisions of this subchapter or the application thereof to any person or circumstance is held invalid, the remainder of the subchapter and the application of such provision to other persons or circumstances shall not be affected thereby.

(a)

DIVISION OF ADMINISTRATION

Insurance Producer Standards of Conduct; Marketing; Commissions and Fees; Management of Funds and Administrative Procedures and Penalties

Readoption with Amendments: N.J.A.C. 11:17A, 11:17B, 11:17C and 11:17D

Proposed: November 7, 1994 at 26 N.J.R. 4307(a).

Adopted: December 30, 1994 by Andrew J. Karpinski, Commissioner, Department of Insurance.

Filed: December 30, 1995 as R.1995 d.60, **with substantive and technical changes** not requiring additional public notice and comment (see N.J.A.C. 1:30-4.3).

Authority: N.J.S.A. 17:1-8.1, 17:1C-6(e), 17:22A-1 et seq., 17:29B-7, 17B:30-13 and 15.

Effective Date: December 30, 1994, Readoption,
February 6, 1995, Amendments.

Expiration Date: December 30, 1999.

Summary of Public Comments and Agency Responses:

The Department received comments from the following organizations:
Alliance of American Insurers
First Trenton Indemnity Company
Independent Insurance Agents of New Jersey
New Jersey Manufacturers Insurance Companies
Northwestern Mutual Life Insurance Company
Professional Insurance Agents of New Jersey

COMMENT: N.J.A.C. 11:17A-1.2. The Department has previously indicated at 25 N.J.R. 4523 that it would make the following change to paragraph 18 in the definition of "clerical duties" at the next appropriate opportunity. "Clerical duties," as defined, includes:

"18. As an underwriter employed by an insurer **or by a licensed insurance producer**, upon receipt of an application submitted by a licensed producer, requesting and reviewing information under paragraph 15 above, requesting and reviewing the results of a physical examination of a prospective insured named in a submitted application, requesting and reviewing information from persons other than the applicant, making a determination that the applicant meets the insurer's underwriting criteria, and mailing the policy to the policyholder or the producer."

You're viewing an archived copy from the New Jersey State Library.

It is suggested that this readoption is an appropriate time to make the amendment indicated.

RESPONSE: The Department agrees and the change has been made accordingly. The Department notes that this change is consistent with the reference to "administrative and underwriting tasks" that is already included in the definition of clerical duties.

COMMENT: N.J.A.C. 11:17A-1.3(e). The Producer Licensing Act, N.J.S.A. 17:22A-1 et seq., does not authorize application of N.J.A.C. 11:17A, 17B, 17C and 17D to the operations of direct writing insurance companies in New Jersey.

Over the past few years, the issue of producer licensing has generated numerous written exchanges between New Jersey Manufacturers ("NJM") and the Department. Since the adoption of the Producer Licensing Act, NJM has steadfastly maintained that salaried employees of direct writers of insurance fall outside the licensing framework—a position with which the Department, as evidenced by early rule proposals, once agreed (see summary of PRN 1989-246, 21 N.J.R. 1317). As is made obvious by the current regulations and other pronouncements, the Department has since altered its position on licensing requirements for company employees. While there is little that can be said to support our pleas that has not already been conveyed to the Department in our responses to prior rule proposals, we take this opportunity to summarize the reasons for our objections to including our employees in the producer licensing framework.

Our argument continues to be that the business of our salaried employees is indistinguishable from the business of the company. The company's service representatives (CSRs) are not intermediaries engaged in the separate business of an agent, broker or consultant and hence need not be subjected to the same licensing requirements imposed on third parties (producers) who bridge the gap between the company and the policyholder. Furthermore, in addition to the logical reasons for excluding company employees from licensing requirements, there exists no evidence that the Legislature intended to broaden the scope of licensing requirements by enacting N.J.S.A. 17:22A-1 et seq. We believe the Department itself stated our argument well in its original proposal at 21 N.J.R. 1317, and we urge the Department to reconsider this previously stated position in its review of N.J.A.C. 11:17A, 11:17B, 11:17C and 11:17D.

Licensing our CSRs was no easy task. On top of the intensive training provided to them on a continuing basis about the specific coverages sold by NJM, our representatives were required to complete 140 classroom hours of a State-mandated insurance course given in our own State-approved insurance school, and then pass a State exam. Considering the administrative fees and salary attributable to time spent in the classroom rather than productively helping policyholders, the cost of licensing each new CSR is approximately $8,000. Presently, almost 200 of our CSRs are licensed as producers. Therefore, significant expenses have been and will continue to be incurred. Money for these unnecessary additional costs would otherwise be available for dividends to policyholders.

This is a prime example of the direct problems caused to NJM and its policyholders by unnecessary government regulation, promulgated contrary to the intent of the Legislature. NJM salaried employees do not earn commissions and their actions are completely the responsibility of this company, which already is licensed and heavily regulated. The quality of their training and their genuine dedication to our policyholders is evidenced by NJM's consistently favorable rankings by consumers and even the Department's own complaint surveys. Requiring individual licenses of our employees is a duplication and an unnecessary burden.

The typical response expressed in opposition to NJM's position is that there should be a level playing field among producers and direct writers. This argument is spurious. The level playing field must be among the various types of insurance agents (for example, independent agents, exclusive agents and hybrids of both), insurance brokers and insurance consultants as mandated by N.J.S.A. 17:22A-1 et seq. NJM competes on a different playing field along with all other carriers and we have chosen not to utilize producers in our business practice. We should not be penalized through the imposition of producer licensing requirements and the concomitant increased costs and regulatory burdens when it is completely unnecessary. Furthermore, it places us at a competitive disadvantage with those insurers utilizing agents when, in fact, those agents bear all costs and regulatory burdens directly. We strongly urge the Department to revisit its position imposing producer licensing requirements on direct writing insurers.

RESPONSE: The Department's position with regard to application of the producer licensing provisions to direct writers has not changed since last expressed in the second response at 25 N.J.R. 1879:

"The underlying statute at N.J.S.A. 17:22A-3 has been interpreted to require that some company personnel may have to be licensed. The purpose of these amendments to the rules implementing the statute is to further define the persons who meet these requirements. The more exposure an employee has with the public in dealing with insurance matters, the more likely it is that licensing will be required. Employees functioning as policyholder or customer service representatives who provide advice or counsel in connection with the marketing of the insurer's products will be required to be licensed.

The Department is well aware of the costs that must be incurred to obtain licensing for certain officers and employees who regularly engage in activities involving the solicitation, negotiation and effectuation of insurance contracts. The Department believes that in these instances, the costs will be more than offset by the benefits which will accrue to the insured public."

This is a matter involving interpretation of legislative intent. Any change in the Department's position must be preceded by legislative clarification of the meaning and intent of the underlying statute.

COMMENT: N.J.A.C. 11:17A-1.4. We strongly object to the definitions of "solicit," "negotiate" and "effectuate," as embodied in this section. These definitions are overly broad and place an undue financial burden on insurers, as they include salaried employees of direct writers in the licensing framework. We believe that only insurance agents and producers who derive their income from solicitation of insurance business should be licensed.

RESPONSE: The preceding response is applicable here as well. Additionally, it should be noted that the application of the producer licensing laws in a given case is as much contingent on the nature of the activities involved as it is on the means or method of compensation.

COMMENT: N.J.A.C. 11:17A-2.3(a). The following language should be added to this subsection which prohibits inducements: "An insurance producer is permitted to give holiday gifts that are not an inducement to purchase insurance." This amendment would allow producers to give presents to insureds as part of holiday goodwill only. Under the present language, even small presents violate the standards of conduct.

RESPONSE: If the suggested language were added, what constitutes "an inducement to purchase insurance" would become difficult to determine prospectively in any given case. The Department believes that the present language of this subsection should remain unchanged so that such determinations need not be made. Additionally, the Department is satisfied with the definition of "inducement" at N.J.A.C. 11:17A-2.2 which is presently expressed in terms of value exceeding $10.00.

COMMENT: N.J.A.C. 11:17A-2.5. One commenter stated that this section, which addresses tie-ins and coercion, should be rewritten. This commenter believes that a financial institution should be prohibited from selling insurance to any client for whom it is serving as the lender and furthermore states that there should be no distinction between a personal lines or a commercial lines account. For example, if a financial institution is issuing a personal loan, the financial institution should still be prohibited from selling commercial insurance to the borrower. The commenter recommended that the DISCLOSURE NOTICE included in this section be strengthened to meet the objective of prohibiting the same institution from serving both as the lender and the insurer.

Another commenter referred to the "current shortcomings and possible consumer harm which may result" from the brevity of N.J.A.C. 11:17A-2.5 as drafted, and expressed great concern with the lender coercion that can take place when a financial institution is licensed as an insurance producer. This commenter opposes **any** licensing of financial institutions in New Jersey, stressing that in their role as lenders, trustees and financial advisors, such institutions wield enormous power over their clients and have access to the most personal, detailed and sensitive information about their client's financial status, business transactions and purchases. This commenter "shares the concern of the State's insurance consumers" that financial institutions can insinuate themselves into the mechanics of obtaining and maintaining insurance coverage to a degree that permits interference with a consumer's free choice at a number of crucial points over the life of a mortgage or other loan.

According to this commenter, three key consumer protections are needed to protect New Jersey insurance consumers amidst the expansionist activity currently taking place in the banking industry:

- First, a definitive step to prohibit lender coercion must be taken by not allowing a financial institution or an insurance producer employed

You're viewing an archived copy from the New Jersey State Library.

by a financial institution to sell an insurance policy to a customer covering property which is the subject matter of a loan by the financial institution.

• Second, abuse of sensitive information a financial institution holds on their customer must be restricted by not allowing a financial institution to share this customer information with an insurance producer unless the information consists only of the customer's name and address and the customer has consented in writing to its release.

• Third, in order to restrict the coercive "steering" of financial institutions to an affiliated insurance producer located within or near a bank's lobby, clear divisions must be established for the insurance consumer between the loan transaction and the sale of insurance.

RESPONSE: The Department is examining these issues in light of increased participation of financial institutions in the insurance marketplace and will likely be proposing amendments at a future date.

COMMENT: N.J.A.C. 11:17A-2.8. This section prohibits "twisting" and should be amended to specifically include reference to "a financial institution acting as a producer" in addition to insurance producers and limited insurance representatives. Financial institutions should be stopped from engaging in the practices enumerated in this section.

RESPONSE: These provisions cannot be made to apply to all financial institutions since this would be beyond the scope of the Department's regulatory authority. But once a financial institution is licensed as an insurance producer, it is subject to the same restrictions as any other licensed insurance producer.

COMMENT: N.J.A.C. 11:17A-4.2. This section requires an insurance producer to witness the signature of an insured on an application. The commenter believes that this is not necessary and can be a burden on a producer who is rolling over a book of business into another carrier. Perhaps the signature could be notarized and mailed; or, in the alternative, anyone in the producer's office should be able to witness the signature.

Two other commenters question the actual consumer protections resulting from this provision, which has caused substantial inconvenience for consumers as well as producers and insurers. With the already extensive application procedures a consumer must endure, adding an additional hoop for them to jump through in order to obtain insurance coverage has proven frustrating and time-consuming. These commenters urge the Department to eliminate this "laborious" requirement altogether.

RESPONSE: The Department has added a new sentence to this section stating that the requirement that the signature of a prospective insured on an application be witnessed by the producer may be waived upon prior written authorization of the insurer. The Department notes, however, that from time to time, insurance applications are brought to its attention as not having genuine signatures. If a signature is required, it must be a genuine signature. The requirement that the applicant's signature be witnessed adds strength to the presumption that the signature is valid.

COMMENT: N.J.A.C. 11:17A-4.3. Experience has shown that the requirement of a 10-day written notification to insureds of information transmitted to carriers is unduly repetitive and costly. The provision imposes additional expense upon the small business agencies, amounts to overregulation and provides insurance consumers with no additional protection. Even without the provision, producers are held to a common-law duty of care to their clients, which duty requires that they transmit underwriting information in a timely manner to carriers. Further protection for consumers against producer negligence in failing to transmit such information is afforded to clients through each producer's errors and omissions insurance. The Department is urged to eliminate this repetitive and costly requirement.

Another commenter states that this section is outdated, suggesting that as a result of automation, the turnaround time on processing the application is much quicker. Requiring written confirmation while the policy is being prepared constitutes additional burdensome paperwork. This commenter suggests that confirmation of underwriting information should only be required if it is requested by the insured.

RESPONSE: With respect to certain lines of insurance, adjustments to the coverages or limits may be requested verbally. In such instances, the interests of the policyholder or applicant must be protected through confirmation that the requested change has been transmitted accurately to the insurer, and the insurer must be confident that the change request transmitted by the producer has been authorized by the policyholder or applicant. This requirement accomplishes both purposes. The Department does, however, acknowledge that when changes must be requested in writing, this requirement may be repetitive and unnecessary since the policyholder may, if he or she wishes, retain a copy of the written request which could be used at a later date to establish that the request had, in fact, been made. New language has been added to waive this requirement in such instances.

COMMENT: N.J.A.C. 11:17B-2.1 broadly discusses commissions and N.J.A.C. 11:17B-3.1 broadly discusses fees. Neither section distinguishes between personal lines, commercial lines or life and health insurance policies. Therefore, the inference is that these sections apply to all lines of insurance. On the other hand, N.J.A.C. 11:17B-3.2 specifically mentions personal lines, property/casualty or personal lines surplus lines insurance and allows "service fees." We believe this is confusing. If service fees are only permitted for these lines of insurance, the regulation should so state. Inferences confuse the issue and lead to abuse of the rule. Furthermore, we believe "service fees" should not be limited, but, instead, the charge should be presented to the insured in plain language, and the insured should sign the document consenting to the additional charge.

RESPONSE: N.J.S.A. 17:22A-17a(18) permits the charging of fees by an insurance producer only when acting as a broker or consultant. N.J.A.C. 11:17B-3.2b clearly states that service fees are not permitted for life or health insurance. N.J.A.C. 11:17B-2.1 and 3.1 are intended to apply to all lines, commercial and personal alike. Lastly, the Department disagrees that service fees should not be limited. Insurance costs are already considerable. Applicants should not be asked to supplement the income of producers to a greater degree than they presently do for services intended to be compensated by commission.

COMMENT: N.J.A.C. 11:17B-3.1(a) states that only an insurance producer acting as an insurance broker or insurance consultant may charge a fee to a policyholder. One commenter stated that all insurance producers should be permitted to charge fees. According to that commenter, a "plain language" disclosure form should be presented to the insured. The insured would then sign the form which states that a fee is being charged, and that the insurance producer is also receiving a commission. Currently, lending institutions are charging such fees and we think insurance producers should also be given the same prerogative.

Another commenter suggests that the following sentence be added to subsection (a): "No insurance broker shall charge a fee for services in connection with automobile insurance." The public should not have to pay fees for the placement of automobile insurance in light of New Jersey's take all eligible law. As an insurer, this commenter is concerned with the amount the public pays for auto insurance and with the significant number of broker's fees that are being paid purportedly for "service, consulting and brokerage."

RESPONSE: As stated in the preceding response, the statute does not permit agents to charge fees. N.J.S.A. 17:22A-17a(18). This includes financial institutions licensed as insurance producers. A disclosure form is already required pursuant to N.J.A.C. 11:17B-3.1(c). Since the law does permit brokers and consultants to charge fees, the Department believes that by requiring disclosure and limiting the amount that may be charged, it is regulating such fees to the extent of its authority.

COMMENT: N.J.A.C. 11:17C-2.4 requires that receipts be issued for premium payment submitted by personal delivery or when requested. We believe that receipts should only be required when cash is being received by the insurance producer or when the insured specifically requests the receipt.

RESPONSE: In most cases, receipts are necessary proofs of payment. A premium paid by check produces a receipt only when the check is negotiated. If an insurance producer fails to remit the check to the insurer, coverage will be cancelled for nonpayment and the policyholder would have no proof of payment.

COMMENT: The Department should not have the sole authority to investigate producer misconduct. We believe a "producer peer review panel" would be the best mechanism for controlling producers who abuse the system. The PAIP Governing Board has found peer review to be successful and we would like peer review procedures to be utilized for all allegations of producer misconduct.

RESPONSE: The Insurance Producer Licensing Act authorizes only the Commissioner to investigate and impose penalties on insurance producers. There is no provision in the New Jersey insurance laws authorizing the Commissioner to delegate that authority beyond the Department.

Upon readoption, the Department has removed the second sentence of N.J.A.C. 11:17A-1.4(e) which is outdated and no longer necessary. The Department has also amended N.J.A.C. 11:17A-4.4 and 11:17C-2.2

You're viewing an archived copy from the New Jersey State Library.

so as to remove the necessity of specific reference to residual market mechanisms created by or pursuant to any statute.

This readoption includes the amendments to N.J.A.C. 11:17A-1.2 and 1.7 which were proposed September 6, 1994 at 26 N.J.R. 3591(a) and adopted effective December 4, 1994 (see 26 N.J.R. 4777(a)).

Executive Order No. 27 Statement

An Executive Order No. 27 analysis is not required because N.J.A.C. 11:17A, 11:17B, 11:17C and 11:17D are not subject to any Federal requirements or standards.

Full text of the readoption can be found in the New Jersey Administrative Code at N.J.A.C. 11:17A, 11:17B, 11:17C and 11:17D.

Full text of the adopted amendments follows (additions to proposal indicated in boldface with asterisks ***thus***; deletions from proposal indicated in brackets with asterisks *[thus]*):

11:17A-1.2 Definitions

The following words and terms, when used in this subchapter, shall have the following meanings, unless the context clearly indicates otherwise:

. . .

"Clerical duties" means the administrative and underwriting tasks accomplished in the office and under the supervision of the insurer or licensed producer that are necessary to produce the insurance contract in accordance with the insurer's or producer's normal procedures and systems, including, but not limited to, the following:

1.-17. (No change.)

18. As an underwriter employed by an insurer ***or by a licensed insurance producer***, upon receipt of an application submitted by a licensed producer, requesting and reviewing information under paragraph 15 above, requesting and reviewing the results of a physical examination of a prospective insured named in a submitted application, requesting and reviewing information from persons other than the applicant, making a determination that the applicant meets the insurer's underwriting criteria, and mailing the policy to the policyholder or the producer.

Example: (No change.)

. . .

11:17A-1.3 Who must be licensed; exceptions

(a)-(d) (No change.)

(e) Officers or employees of insurers authorized to do business in this State and officers or employees of licensed insurance producers, who solicit, negotiate or effectuate insurance by communicating directly with the public whether in person or by mail, fax, computer or telephone, in the name of and on behalf of the insurer or the licensed insurance producer, for compensation of any type, shall be licensed as an insurance producer, or registered as a limited insurance representative, as appropriate. *[With respect to officers or employees of insurers, licensure shall be secured on or before May 1, 1993.]* The requirements of this subsection shall not apply to officers or employees whose participation in the solicitation, negotiation or effectuation of insurance contracts is incidental to their employment duties and whose compensation is not directly related to sales.

11:17A-4.2 Insurance producer to witness signature of insured

In cases where an applicant's signature is required, an insurance producer who takes an application for insurance shall be required to witness the signature of the prospective insured on the application prior to the submission of the application to the insurer. ***This requirement may be waived, however, upon prior written authorization by the insurer.***

11:17A-4.3 Confirmation of underwriting information

(a) Every insurance producer shall, within 10 days after the effectuation of an insurance transaction made through an insurance producer which modifies the terms of an existing insurance contract or the terms of an application for insurance, notify a policyholder or applicant, in writing, of all information submitted to the insurance producer by the policyholder or applicant pertinent to the modification, including confirmation that the insurance producer has sent the information to the insurer.

1. The requirement in (a) above shall apply to all insurance policies, certificates, binders and endorsements.

2. The requirement in (a) above shall not apply when the request for such modification is required to be submitted by the policyholder or applicant to the insurance producer in writing.

11:17A-4.4 Special underwriting associations

(a) Every insurance producer who solicits, negotiates or effects contracts of insurance for the placement of risks in *[the New Jersey Automobile Full Insurance Underwriting Association ("NJAFIUA") or the New Jersey Insurance Underwriting Association ("Fair Plan")]* ***any residual market mechanism created by or pursuant to any statute*** shall conduct his or her business in accordance with the ***applicable*** plan of operation *[established pursuant to N.J.S.A. 17:30E-1 et seq. and 17:37A-1 et seq. respectively]*.

(b) (No change.)

11:17C-2.2 Remittance standards

(a) All premium funds shall be remitted to the insurer or other insurance producer, as applicable, within five business days after receipt of the funds except as otherwise required or provided by any of the following:

*[1. The rules of the New Jersey Automobile Full Insurance Underwriting Association (NJAFIUA);

2. The rules of the New Jersey Insurance Underwriting Association (FAIR Plan);]*

*[3.]****1.*** The insurance producer's contract with the insurer or written agreement with the insured;

*[4.]****2.*** Any controlling statute or administrative rule; or

*[5.]****3.*** The rules of *[the Commercial Automobile Insurance Plan (CAIP)]* ***any residual market mechanism created by or pursuant to any statute***.

(b)-(d) (No change.)

(a)

NEW JERSEY INDIVIDUAL HEALTH COVERAGE PROGRAM BOARD

Individual Health Coverage Program

Adopted Amendments: N.J.A.C. 11:20-4.1, 12.3, 12.5 and N.J.A.C. 11:20 Appendix Exhibits A to G

Adopted New Rule: N.J.A.C. 11:20 Appendix Exhibit Q

Adopted Repeal and New Rule: N.J.A.C. 11:20-3.2

Proposed: December 19, 1994 at 26 N.J.R. 4884(a), in accordance with N.J.S.A. 17B:27A-16.1.

Adopted: December 22, 1994 by the New Jersey Individual Health Coverage Program Board, Kevin O'Leary, Executive Director.

Filed: December 23, 1994 as R.1995 d.51, **with substantive and technical changes** not requiring additional public notice and comment (see N.J.A.C. 1:30-4.3).

Authority: N.J.S.A. 17B:27A-2 et seq.

Effective Date: December 23, 1994.

Operative Date: January 1, 1995.

Expiration Date: August 13, 1998.

These amendments are being adopted pursuant to the procedures of P.L. 1993, c.164, section 8 as therein authorized. Accordingly, notice of the proposal of this amendment was published in three newspapers of general circulation in New Jersey, and simultaneously mailed to all known interested parties when submitted to the Office of Administrative Law ("OAL") for publication in the New Jersey Register.

Pursuant to section 8(d), all interested persons were provided at least 20 days comment period, which comment period ended December 10, 1994. Pursuant to section 8(e), the Board has adopted these rules immediately upon the expiration of the public comment period by filing notice of the adoption with the OAL for publication in the New Jersey

You're viewing an archived copy from the New Jersey State Library.

Register. Because of the expedited nature of this special rulemaking process, notice of the adoption appears in the New Jersey Register after the Board has adopted the amendment and it has become effective.

Summary of Public Comments and Agency Responses:

A public hearing was held on December 13, 1994 before the Individual Health Coverage Program Board. No comments were made at the hearing. The hearing record may be reviewed by contacting Kevin O'Leary, Executive Director, New Jersey Individual Health Coverage Program Board, CN 325, Trenton, NJ 08625.

Comments on the proposed rules were received from the following parties during the prescribed comment period:

1) BlueCross BlueShield of New Jersey
2) The Prudential
3) Manhattan National Life Company

COMMENT: One commenter (and several others, after the close of the comment period) stated that there would be insufficient time for carriers to implement all the necessary changes to the policy forms in time for the proposed January 1, 1995 effective date. The commenter asked that the effective date be delayed for 60 days until March 1, 1995.

RESPONSE: The Board understands the difficulty of making the required changes to the policy forms by January 1, 1995. However, the Board has attempted to provide materials in advance so that only minor changes would have to be made upon the Board's adoption of these amendments. Certain carriers are prepared to offer the final revised policy forms on January 1, 1995. Therefore, rather than delay the effective date, the Board will allow carriers to begin offering the revised policy forms on January 1, 1995, but will require all carriers to issue only the revised policy forms on or after March 1, 1995. In other words, carriers that need additional time to implement the revised policy forms may take until March 1, 1995 to do so.

COMMENT: One commenter noted that the reference to the Exhibit in N.J.A.C. 11:21-3.2(d) is missing and that the Exhibit reference should be to Exhibit Q.

RESPONSE: The Board agrees this was a typographical error and that the correct reference is to Exhibit Q. The proposed and adopted rule reflects this correction.

COMMENT: One commenter noted that in Section 3(b)2 of Exhibit Q, the coinsurance option for in-network prescription drug coverage should be 50 percent rather than five percent as stated in the proposed rule.

RESPONSE: The Board agrees this was a typographical error and the correct amount is 50 percent. The adopted rule reflects this correction.

COMMENT: One commenter requested language be added to the Note under "Who is Eligible" in section II, Eligibility of Exhibits A through F to reflect that persons are eligible if replacing another individual health benefit plan, if the other coverage terminates no later than 30 days after the effective date of coverage.

RESPONSE: The Board agrees that it is appropriate to add language as requested so that the policy forms reflect the requirement to terminate the other coverage within 30 days which is part of N.J.A.C. 11:20-12.5(a). Therefore, the sentence "The other plan must be terminated no later than 30 days after the effective date of this Policy" has been added to the Note in Exhibits A through E and the sentence "The other plan must be terminated no later than 30 days after the effective date of this Contract" has been added to the Note in Exhibit F.

COMMENT: One commenter raised concern regarding the time frames for carrier response set out in the Notice Requirements provision of section VIII, Utilization Review of Exhibits A through F. The concern related to the amount of time in which the carrier is required to notify the insured or practitioner that additional information is needed in order to make a determination on a request for continued hospitalization. The commenter requested that the Board not adopt the proposed language nor that the original policy language be amended. In the alternative, the commenter suggested that in order to make such a requirement workable, the requirement be modified to allow for a response "on the next business day" and to provide that there be no penalty reduction in payment of any eligible benefits if the carrier does not respond within the specified time frame, that such a reduction would only apply upon notification to the insured or practitioner of a determination.

RESPONSE: The Board believes the proposed changes to the Utilization Review section of the policy forms are necessary and desirable, therefor the proposed language is being adopted. However, it was not the Board's intent to create requirements which are not workable. The commenter's suggested alternative changes do not change the intent of the Board in setting the requirements and are consistent with other time frame requirements set forth in the Utilization Review sections of the policy forms. Therefore, the Board has added the language "or the next business day, whichever is later," and the sentence, "In the event We do not respond to You or Your Practitioner within these time frames, We will not apply the 50% reduction of benefits as allowed by this Utilization Review section to Covered Charges incurred between the time You or Your Practitioner notify Us and We respond to You." to the paragraph following the provisions setting the time frames in Step 2 of the Utilization Review section.

COMMENT: One commenter requested that maternity care not be included in the services and supplies subject to the Utilization Review requirements as set forth in section VIII of Exhibits A through F on the basis that the requirements of the Utilization Review process are generally to control costs associated with unnecessary services and, in the instance of pre-natal care, that the potential reduction in benefits for not complying with the Utilization Review requirements may tend to discourage insureds from receiving medically necessary and appropriate care.

RESPONSE: The Board does not agree that it is not appropriate to include maternity care in the Utilization Review section, and that there is justification for a carrier's need to be notified of a pregnancy and be in a position to monitor care and potential adverse developments. Therefore the Board is not making the recommended change and maternity care continues to be included in the services and supplies subject to the Utilization Review requirements.

COMMENT: One commenter recommended that the 6th sentence in Section 1 of the Individual Application Instructions and Section 2 of the Conditions of Acceptance of Exhibit G be amended to include reference to developmentally disabled dependents so that the language in this form is consistent with the language in the policy forms.

RESPONSE: The Board agrees that the language in the application and the policy forms should be consistent and language has been changed to refer to "mentally or physically handicapped or developmentally disabled dependents" for that purpose.

COMMENT: One commenter requested that item 5 of the Eligibility Requirements of Exhibit G, the Application for Individual Health Benefits Plan For Individuals and Families, be amended to state that the effective date of coverage be no later than the first of the month following the month that the completed application was "received" rather than "dated" to discourage a practice of backdating.

RESPONSE: The Board agrees with the suggested change in order to avoid coverage issues and has made the language change. However, by making this change, the Board recognizes the need to clarify this statement and has adding the additional language "by us or our duly authorized agent".

COMMENT: One commenter requested that flexibility be added to item 5 of the Eligibility Requirements of Exhibit G, the Application for Individual Health Benefits Plan for Individuals and Families, so that carriers would be permitted to make new coverage for existing customers effective the beginning of the next benefit month for non-HMO coverage, following the date the completed application is received, recognizing this may be later than the first of the month following the month the application was received.

RESPONSE: While the Board agrees that some flexibility is needed to accommodate varying circumstances, it does not agree that such flexibility can appropriately be provided for in this Standard form. Carriers who need flexibility in this area may submit proposed language on an alternative application form under N.J.A.C. 11:20-4.1(b). The Board, in approving alternative effective date language, will require an explanation of the need for a different effective date and a certification from the carrier that any pre-existing condition limitation waiver will not be affected by the use of a different date.

Summary of Agency-Initiated Changes:

In Exhibit B, section II Eligibility, under "Who is Eligible," language is added concerning non-coverage under another individual health benefits plan. This text was included in the published amendments to the other Exhibits, and the inclusion of text of this nature is discussed in the proposal Summary. The omission of the text in this Exhibit occurred through a Register publication error.

On Exhibit C, the change proposed to section VIII, XI and XII in the other Exhibits were inadvertently omitted from the Register published proposal, and are made upon adoption.

You're viewing an archived copy from the New Jersey State Library.

Full text of the adoption follows (additions to proposal indicated in boldface with asterisks ***thus***; deletions from proposal indicated in cursive brackets with asterisks *{thus}*):

11:20-3.2 Policy forms

(a) For standard health benefit plan contracts effective on or after January 1, 1995, members shall use the standard policy forms set forth in the Appendix to this subchapter as Exhibits A through F.

(b) For standard health benefit plan policies with effective dates prior to January 1, 1995, members shall convert the contracts to the respective standard policy forms set forth in the Appendix to this subchapter as Exhibits A through F on the first 12 month contract anniversary date on or after January 1, 1995.

(c) A member choosing to offer a standard health benefits plan through or in conjunction with a managed care network in accordance with N.J.A.C. 11:20-3.1(d) shall use the appropriate standard language set forth in the Appendix to this subchapter as Exhibit Q in conjunction with the standard policy forms set forth as Exhibits A through E.

(d) Before marketing any of the standard policy forms, a member shall file in triplicate with the Board, the Certification Form set forth in the Appendix to this subchapter as Exhibit Q. Affiliated Carriers must file separate Certification Forms. A new Certification Form must be filed any time a member makes any permitted changes in the standard health benefits forms being offered.

11:20-4.1 Standard application form

(a) All members offering standard health benefits plans with an effective date on or after August 1, 1993, shall use the standard application form approved by the Board and specified in Exhibit G of the Appendix to this chapter, except as provided in (b) below.

(b) A member may submit to the Board for approval an alternative application form that differs in format but not in content from the standard form set forth in Exhibit G of the Appendix. The member may use the alternative form when submitted unless and until disapproved by the Board.

11:20-12.3 Eligibility for coverage under a standard health benefits plan

(a) (No change.)

(b) A person shall not be covered by a standard health benefits plan, as the policyholder or a dependent, if the person is eligible for Medicare, Medicaid, a group health benefits plan, except as provided in N.J.A.C. 11:20-12.4, or if the person is covered by any other individual health benefits plan, except as provided in N.J.A.C. 11:20-12.5(a).

11:20-12.5 Selection of a standard health benefits plan by a person covered by an individual health benefits plan

(a) A person who is covered by an individual health benefits plan other than one of the standard health benefits plans issued pursuant to this chapter may choose, at any time, to replace that health benefits plan with any standard health benefits plan. A carrier shall not offer a person coverage by a standard health benefits plan unless the person's coverage by the individual health benefits plan being replaced has been terminated or will terminate no later than 30 days after the effective date of the standard health benefits plan. A carrier may require evidence of such termination. If a person fails to terminate a prior individual health benefits plan as required above, the standard health benefits plan shall be of no force and effect.

(b)-(g) (No change.)

1. The alternative application form shall be submitted along with the Certification Form set forth in the Appendix to this subchapter as Exhibit Q.

2. Alternative application form shall be submitted in triplicate to the Board at the following address:

Executive Director
New Jersey Individual Health Coverage Program
20 West State Street, 10th Floor
CN 325
Trenton, NJ 08625

3.-5. (No change.)

APPENDIX
EXHIBIT A

TABLE OF CONTENTS

Section		Page
...		
V.	BENEFIT DEDUCTIBLES AND COINSURANCE ...	
	Cash Deductible ...	
	Family Deductible Cap ...	
	Coinsurance Cap ...	
	Deductible Credit ...	
	Deductible Carryover ...	
	Payment Limits ...	
...		
VIII.	UTILIZATION REVIEW ...	
	Request for Care Preapproval ...	
	Notice Requirements ...	
	Obtaining a Second Opinion ...	
	Obtaining a Third Opinion ...	
...		
XI. [XIII.]	RIGHT TO RECOVERY—THIRD PARTY LIABILITY ...	
XII. [XIV.]	GENERAL PROVISIONS ...	

...

II. ELIGIBILITY

TYPES OF COVERAGE

...

WHO IS ELIGIBLE

(a) **THE POLICYHOLDER**—You, if Your Primary Residence is in the State of New Jersey, **You are not covered under another individual health benefits plan,** and You are not eligible for Medicare, Medicaid or a Group Health Benefits Plan that provides the same or similar coverage.

(b) **SPOUSE**—Your Spouse, **who is not covered under another individual health benefits plan, and** who is not eligible for Medicare, Medicaid or a Group Health Benefits Plan that provides the same or similar coverage.

(c) **CHILD**—Your Child, **who is not covered under another individual health benefits plan,** who is not eligible for Medicare, Medicaid or a Group Health Benefits Plan that provides the same or similar coverage, and who qualifies as a Dependent, as those terms are defined in the "Definition" section of this Policy.

NOTE: YOU AND/OR YOUR DEPENDENTS ARE ELIGIBLE FOR COVERAGE UNDER THIS POLICY IF THIS POLICY REPLACES ANOTHER INDIVIDUAL HEALTH BENEFITS PLAN UNDER WHICH YOU AND/OR YOUR DEPENDENTS ARE COVERED. *THE OTHER PLAN MUST BE TERMINATED NO LATER THAN 30 DAYS AFTER THE EFFECTIVE DATE OF THIS POLICY.* WE MAY REQUIRE PROOF THAT THE OTHER COVERAGE HAS BEEN TERMINATED.

...

V. BENEFIT DEDUCTIBLES AND COINSURANCE

...

VIII. UTILIZATION REVIEW

THE DECISIONS MADE BY OUR REPRESENTATIVE(S) IN THIS UTILIZATION REVIEW PROGRAM ARE INTENDED ONLY TO DETERMINE THE EXTENT OF REIMBURSEMENT FOR A SERVICE.

OUR PAYMENT WILL BE REDUCED FOR NONCOMPLIANCE WITH THE PROVISIONS SET FORTH IN THIS SECTION.

A. IF YOU OR YOUR PRACTITIONER DO NOT REQUEST OUR AUTHORIZATION, OR IF, AFTER CONSIDERATION OF SUCH A REQUEST, WE DO NOT AUTHORIZE A HOSPITAL ADMISSION OR PROCEDURE, SERVICES OR SUPPLIES AS REQUIRED IN THIS SECTION, WE WILL REDUCE ANY PAYMENT WE MAKE BY 50% PROVIDED WE DETERMINE THE HOSPITAL ADMISSION, PROCEDURE, SERVICE OR SUPPLIES WERE MEDICALLY NECESSARY AND APPROPRIATE. IF WE DETERMINE THAT PERFORMANCE

You're viewing an archived copy from the New Jersey State Library.

OF THE PROCEDURE OR THE HOSPITALIZATION WAS NOT MEDICALLY NECESSARY AND APPROPRIATE, WE WILL NOT MAKE ANY PAYMENT.

B. IF YOU DO NOT OBTAIN A SECOND AND/OR THIRD OPINION WHICH WE ASK YOU TO OBTAIN FOR PERFORMANCE OF A SURGICAL PROCEDURE OR HOSPITAL ADMISSION, ANY PAYMENT WE MAKE WILL BE REDUCED BY 20% PROVIDED WE DETERMINE THE HOSPITALIZATION OR PERFORMANCE OF THE PROCEDURE WAS MEDICALLY NECESSARY AND APPROPRIATE. IF WE DETERMINE THAT PERFORMANCE OF THE PROCEDURE OR THE HOSPITALIZATION WAS NOT MEDICALLY NECESSARY AND APPROPRIATE, WE WILL NOT MAKE ANY PAYMENT.

C. IF YOU OBTAIN A SECOND AND THIRD OPINION FOR PERFORMANCE OF A SURGICAL PROCEDURE OR HOSPITAL ADMISSION, AND THE OPINIONS DO NOT CONFIRM THE NEED FOR THE PROCEDURE OR HOSPITALIZATION AND YOU PROCEED WITH THE PROCEDURE OR HOSPITALIZATION, WE WILL NOT PAY FOR THE PROCEDURE OR HOSPITALIZATION NOR ANY ASSOCIATED PRACTITIONER (INCLUDING FACILITY) CHARGES.

YOU WILL BE RESPONSIBLE FOR PAYING TO THE PROVIDER THE AMOUNT OF ANY REDUCTION OF BENEFITS (IN ADDITION TO ANY OTHER PAYMENTS YOU ARE REQUIRED TO MAKE UNDER THIS POLICY).

Any reduction of benefits under this provision is subject to Your rights under the "Claims Appeal" section of the "Claims Procedure" provision of this Policy.

STEP 1—Request For Care Preapproval

If Your Practitioner recommends that You (a) be admitted, for any reason, as an Inpatient; or (b) undergo any of the Surgical procedures or receive other services or supplies listed below, You must first obtain Our authorization to Determine whether We agree that the hospitalization, procedures or other services and supplies are Medically Necessary and Appropriate.

Failure to notify Us of the procedures, services or supplies as provided in Step 2 below, will not affect Our payment if We Determine that notice was given to Us as soon as was reasonably possible.

In some instances, before We authorize a hospitalization or the performance of a surgical procedure listed, We may require a second and/or third opinion. See "Step 3" and "Step 4" below.

Our authorization is valid for 30 days. If the hospitalization, procedure, service or use of the supply does not occur as planned, You or Your Practitioner must contact Us to renew the authorization. If the authorization is not renewed, We will consider the hospitalization, procedure, service or supply as not authorized.

If You or Your Practitioner obtain Our authorization for one of the listed procedures, We, in consultation with Your Practitioner, will authorize the appropriate setting (Inpatient or Outpatient) for the proposed procedure. If We approve an Inpatient admission, You or Your Practitioner may proceed with the admission and Our Payment will not be affected. **IF WE DO NOT AUTHORIZE AN INPATIENT ADMISSION AND YOU PROCEED WITH THAT ADMISSION, ANY PAYMENT FOR FACILITY CHARGES WILL BE REDUCED BY 50%.**

PROCEDURES, SERVICES AND SUPPLIES REQUIRING PREAPPROVAL

SURGICAL PROCEDURES

Adenoidectomy
Arthroscopy
Bunionectomy
Carpal Tunnel Surgery
Cesarean Section
Cholecystectomy
Coronary Artery Angioplasty
Coronary Artery Bypass Graft
Esophagoscopy
Excision of Intervertebral Disk
Gastroduodenoscopy
Hip Replacement
Hysterectomy
Knee Replacement
Lower Back Surgery
Mastectomy
Meniscectomy
Myringotomy
Pacemaker Implantation
Prostatectomy
Rhinoplasty
Septectomy with Rhinoplasty
Tonsillectomy
Tubal Transection and/or Ligation
Tympanoplasty
Tympanotomy Tube

MEDICAL PROCEDURES

Lower Back Medical Care

DIAGNOSTIC PROCEDURES

Cardiac Catheterization
CAT SCAN
Cystoscopy
Magnetic Resonance Imaging

OTHER SERVICES AND SUPPLIES

Home Health Care
Skilled Nursing Care
Maternity Care (See STEP 2 (a))
Hospice Care
Infusion Therapy

STEP 2—Notice Requirements

If We are notified within the required time and We Determine that the procedures, services or supplies are Medically Necessary and Appropriate, Our Payment will not be affected. **IF WE ARE NOT NOTIFIED WITHIN THE TIME SPECIFIED, WE WILL REDUCE ANY PAYMENT BY 50%.**

(a) For **Non-Medical Emergency** hospitalizations, procedures, services or supplies listed above, You or Your Practitioner must **contact Us at least 3 days prior to admission, treatment or purchase** to obtain Our authorization. We will provide You or Your Practitioner with Our Determination within those 3 days. However, for **maternity care,** You or Your Practitioner must contact Us **within the first 12 weeks of medical confirmation** of a pregnancy. We will send You or Your Practitioner Our acknowledgement of the pregnancy within 7 days.

(b) For **Medical Emergency** hospitalizations, procedures, services or supplies You or Your Practitioner must contact Us **within 48 hours or on the next business day (whichever is later),** from the commencement of hospitalization, treatment, or use of supplies, whichever is later, to obtain Our authorization. We will provide You or Your Practitioner with Our Determination within 48 hours.

(c) For **Continued Confinement** as an Inpatient beyond the time authorized, You or Your Provider must contact us **at least 1 full day, i.e. 24 hours, prior to the preapproved discharge date,** for additional authorization. We will provide You or Your Practitioner with Our Determination within those 24 hours.

In the event We are not able to provide You or Your Practitioner with a Determination within the time frames stated, We will tell You and Your Practitioner before the mid-point of the time stated, ***or the next business day, whichever is later,*** as well as put in writing to You, what specific information is needed to make that Determination. ***In the event We do not respond to You or Your Practitioner within these time frames, We will not apply the 50% reduction of benefits as allowed by this Utilization Review section to Covered Charges incurred between the time You or Your Practitioner notify Us and We respond to You.***

In the event We do not authorize the hospitalization, procedure, service or supplies, We will send You a written statement within 7 days, explaining the specific reasons for denial of the authorization. Any such denial of Our authorization is subject to Your rights under the "Claims Appeal" section of the "Claims Procedure" provision of this Policy.

Failure to notify Us of the procedures, services or supplies listed above will not affect Our payment if We Determine that notice was given to Us as soon as was reasonably possible.

You're viewing an archived copy from the New Jersey State Library.

STEP 3—Obtaining a Second Opinion

You may always obtain a second opinion when You are advised to have Surgery or be hospitalized. We may **require** that You obtain a second opinion if We Determine that it is necessary in order for Us to authorize a surgical procedure or hospital admission. If We Determine that a second opinion is necessary, We may arrange for the second opinion consultation. Regardless of whether the second opinion is at Our request or Yours, We will pay for the consultation and for any Diagnostic Services and Pre-Admission Testing necessary for the second opinion, subject to all Policy limitations and exclusions.

If the second opinion confirms the need for a surgical procedure, We, in consultation with Your Practitioner, will authorize the appropriate setting (Inpatient or Outpatient) for the proposed procedure. If We approve an Inpatient admission, You or Your Practitioner may proceed with the admission and Our payment will not be affected.

IF WE DO NOT AUTHORIZE AN INPATIENT ADMISSION FOR PERFORMANCE OF THE PROCEDURE AND YOU PROCEED WITH THAT ADMISSION, ANY PAYMENT FOR FACILITY CHARGES WILL BE REDUCED BY 50%.

IF YOU DO NOT OBTAIN A SECOND OPINION WHICH WE ASK YOU TO OBTAIN, OUR PAYMENT WILL BE REDUCED BY 20% PROVIDED WE DETERMINE THE HOSPITALIZATION OR PERFORMANCE OF THE SURGICAL PROCEDURE WAS MEDICALLY NECESSARY AND APPROPRIATE. IF WE DETERMINE THAT PERFORMANCE OF THE SURGICAL PROCEDURE OR THE HOSPITALIZATION WAS NOT MEDICALLY NECESSARY AND APPROPRIATE, WE WILL NOT MAKE ANY PAYMENT.

A confirming second opinion is valid for 90 days. If You do not undergo the surgical procedure or become hospitalized within that time, You or Your Practitioner must notify Us and renew the confirming opinion prior to the hospital admission or the procedure being performed. If the confirming opinion is not renewed, We may consider the confirming opinion not authorized.

If the second opinion does not confirm the need for the surgical procedure or hospital admission, You may obtain or We may require You obtain a third opinion.

STEP 4—Obtaining a Third Opinion

If you obtained a second opinion and it did not confirm the need for the surgical procedure or hospital admission, You may obtain or We may require You to obtain a third opinion. Regardless of whether the third opinion is at Our request or Yours, We will pay for the consultation and for any Diagnostic Services and Pre-Admission Testing necessary for the third opinion, subject to all Policy limitations and exclusions.

IF THE SECOND AND THIRD OPINIONS DO NOT CONFIRM THE NEED FOR THE SURGICAL PROCEDURE OR HOSPITAL ADMISSION AND YOU PROCEED WITH THE PROCEDURE OR HOSPITALIZATION, WE WILL NOT PAY FOR THE PROCEDURE OR HOSPITALIZATION NOR ANY ASSOCIATED PRACTITIONER (INCLUDING FACILITY) CHARGES.

IF YOU DO NOT OBTAIN A THIRD OPINION WHICH WE HAVE ASKED YOU TO OBTAIN, OUR PAYMENT FOR THE PROCEDURE OR HOSPITALIZATION WILL BE REDUCED BY 20% PROVIDED WE DETERMINE THE PERFORMANCE OF THE PROCEDURE OR THE HOSPITALIZATION WAS MEDICALLY NECESSARY AND APPROPRIATE. IF WE DETERMINE THAT PERFORMANCE OF THE PROCEDURE OR THE HOSPITALIZATION WAS NOT MEDICALLY NECESSARY AND APPROPRIATE, WE WILL NOT MAKE ANY PAYMENT.

A confirming third opinion is valid for 90 days. If you do not undergo the procedure or become hospitalized within that time, You or Your Practitioner must notify Us and renew the confirming opinion prior to the procedure being performed or the hospitalization. If the confirming opinion is not renewed, We may consider the confirming opinion not authorized.

. . .

XII. [XIV.] GENERAL PROVISIONS

. . .

TERMINATION OF THE POLICY—RENEWAL PRIVILEGE

During or at End of Grace Period—Failure to Pay Premiums: If any Premium is not paid by the end of its grace period, the Policy will end when that period ends. **However,** You may write to Us, in advance, to ask that the Policy be terminated at the end of any period for which Premiums have been paid. Then the Policy will end on the date requested.

This Policy will be renewed automatically each year on the Anniversary Date, unless one of the following circumstances occur:

(a) nonpayment of Premiums;
(b) fraud or misrepresentation by You or Your Dependents;
(c) termination of Your eligibility or, with respect to Your Dependent, Your Dependent's Eligibility;
(d) You become eligible either for Medicare, Medicaid or to participate in a Group Health Benefits Plan which provides the same or similar coverage;
(e) **You became covered under another individual health benefits plan;**
(f) non-renewal as authorized by the Board.

Immediate cancellation will occur if You commit fraudulent acts or make misrepresentations with respect to coverage of You and Your Dependents.

EXHIBIT B

. . .

TABLE OF CONTENTS

Section — Page

. . .

V. BENEFIT DEDUCTIBLES AND COINSURANCE ...
Cash Deductible .....
Family Deductible Cap .....
Coinsurance Cap .....
Deductible Credit .....
Deductible Carryover .....
Payment Limits .....

. . .

VIII. UTILIZATION REVIEW .....
Request for Care Preapproval .....
Notice Requirements .....
Obtaining a Second Opinion .....
Obtaining a Third Opinion .....

. . .

XI. [XIII.] RIGHT TO RECOVERY—THIRD PARTY LIABILITY .....
XII. [XIV.] GENERAL PROVISIONS .....

. . .

II. ELIGIBILITY

. . .

WHO IS ELIGIBLE

(a) **THE POLICYHOLDER**—You, if Your Primary Residence is in the State of New Jersey***, You are not covered under another individual health benefits plan,*** and You are not eligible for Medicare, Medicaid or a Group Health Benefits Plan that provides the same or similar coverage.
(b) **SPOUSE**—Your Spouse***, who is not covered under another individual health benefits plan,*** and who is not eligible for Medicare, Medicaid or a Group Health Benefits Plan that provides the same or similar coverage.
(c) **CHILD**—Your Child***, who is not covered under another individual health benefits plan,*** who is not eligible for Medicare, Medicaid or a Group Health Benefits Plan that provides the same or similar coverage, and who qualifies as a Dependent, as those terms are defined in the "Definition" section of this Policy.

****NOTE: YOU AND/OR YOUR DEPENDENTS ARE ELIGIBLE FOR COVERAGE UNDER THIS POLICY IF THIS POLICY REPLACES ANOTHER INDIVIDUAL HEALTH BENEFITS PLAN UNDER WHICH YOU AND/OR YOUR DEPENDENTS ARE COVERED. THE OTHER PLAN MUST BE TERMINATED NO LATER THAN 30 DAYS AFTER THE EFFECTIVE DATE OF THIS POLICY. WE MAY REQUIRE PROOF THAT THE OTHER COVERAGE HAS BEEN TERMINATED.****

. . .

You're viewing an archived copy from the New Jersey State Library.

V. BENEFIT DEDUCTIBLES AND COINSURANCE

. . .

Coinsurance Cap: This Policy limits the *{Inpatient Hospital}* Coinsurance amounts You must pay each Benefit Period. The Coinsurance cap cannot be met with Non-Covered Expenses and Coinsurance for the treatment of Mental or Nervous Conditions and Substance Abuse.

There is a Coinsurance cap for each Covered Person. The Coinsurance cap is shown in the "Schedule of Benefits."

Each Covered Person's Coinsurance amounts are used to meet the covered persons own Coinsurance cap. And all amounts used to meet the cap must actually be paid by You.

Once Your Coinsurance amounts in a Benefit Period exceed the individual cap, We waive Your Coinsurance for the rest of that Benefit Period.

. . .

VIII. UTILIZATION REVIEW

THE DECISIONS MADE BY OUR REPRESENTATIVE(S) IN THIS UTILIZATION REVIEW PROGRAM ARE INTENDED ONLY TO DETERMINE THE EXTENT OF REIMBURSEMENT FOR A SERVICE.

OUR PAYMENT WILL BE REDUCED FOR NONCOMPLIANCE WITH THE PROVISIONS SET FORTH IN THIS SECTION.

A. IF YOU OR YOUR PRACTITIONER DO NOT REQUEST OUR AUTHORIZATION, OR IF, AFTER CONSIDERATION OF SUCH A REQUEST, WE DO NOT AUTHORIZE A HOSPITAL ADMISSION OR PROCEDURE, SERVICES OR SUPPLIES AS REQUIRED IN THIS SECTION, WE WILL REDUCE ANY PAYMENT WE MAKE BY 50% PROVIDED WE DETERMINE THE HOSPITAL ADMISSION, PROCEDURE, SERVICE OR SUPPLIES WERE MEDICALLY NECESSARY AND APPROPRIATE. IF WE DETERMINE THAT PERFORMANCE OF THE PROCEDURE OR THE HOSPITALIZATION WAS NOT MEDICALLY NECESSARY AND APPROPRIATE, WE WILL NOT MAKE ANY PAYMENT.

B. IF YOU DO NOT OBTAIN A SECOND AND/OR THIRD OPINION WHICH WE ASK YOU TO OBTAIN FOR PERFORMANCE OF A SURGICAL PROCEDURE OR HOSPITAL ADMISSION, ANY PAYMENT WE MAKE WILL BE REDUCED BY 20% PROVIDED WE DETERMINE THE HOSPITALIZATION OR PERFORMANCE OF THE PROCEDURE WAS MEDICALLY NECESSARY AND APPROPRIATE. IF WE DETERMINE THAT PERFORMANCE OF THE PROCEDURE OR THE HOSPITALIZATION WAS NOT MEDICALLY NECESSARY AND APPROPRIATE, WE WILL NOT MAKE ANY PAYMENT.

C. IF YOU OBTAIN A SECOND AND THIRD OPINION FOR PERFORMANCE OF A SURGICAL PROCEDURE OR HOSPITAL ADMISSION, AND THE OPINIONS DO NOT CONFIRM THE NEED FOR THE PROCEDURE OR HOSPITALIZATION AND YOU PROCEED WITH THE PROCEDURE OR HOSPITALIZATION, WE WILL NOT PAY FOR THE PROCEDURE OR HOSPITALIZATION NOR ANY ASSOCIATED PRACTITIONER (INCLUDING FACILITY) CHARGES.

YOU WILL BE RESPONSIBLE FOR PAYING TO THE PROVIDER THE AMOUNT OF ANY REDUCTION OF BENEFITS (IN ADDITION TO ANY OTHER PAYMENTS YOU ARE REQUIRED TO MAKE UNDER THIS POLICY).

Any reduction of benefits under this provision is subject to Your rights under the "Claims Appeal" section of the "Claims Procedure" provision of this Policy.

STEP 1—Request For Care Preapproval

If Your Practitioner recommends that You (a) be admitted, for any reason, as an Inpatient; or (b) undergo any of the Surgical procedures or receive other services or supplies listed below, You must first obtain Our authorization to Determine whether We agree that the hospitalization, procedures or other services and supplies are Medically Necessary and Appropriate.

Failure to notify Us of the procedures, services or supplies as provided in Step 2 below, will not affect Our payment if We Determine that notice was given to Us as soon as was reasonably possible.

In some instances, before We authorize a hospitalization or the performance of a surgical procedure listed, We may require a second and/or third opinion. See "Step 3" and "Step 4" below.

Our authorization is valid for 30 days. If the hospitalization, procedure, service or use of the supply does not occur as planned, You or Your Practitioner must contact Us to renew the authorization. If the authorization is not renewed, We will consider the hospitalization, procedure, service or supply as not authorized.

If You or Your Practitioner obtain Our authorization for one of the listed procedures, We, in consultation with Your Practitioner, will authorize the appropriate setting (Inpatient or Outpatient) for the proposed procedure. If We approve an Inpatient admission, You or Your Practitioner may proceed with the admission and Our Payment will not be affected. **IF WE DO NOT AUTHORIZE AN INPATIENT ADMISSION AND YOU PROCEED WITH THAT ADMISSION, ANY PAYMENT FOR FACILITY CHARGES WILL BE REDUCED BY 50%.**

PROCEDURES, SERVICES AND SUPPLIES REQUIRING PREAPPROVAL

SURGICAL PROCEDURES

Adenoidectomy
Arthroscopy
Bunionectomy
Carpal Tunnel Surgery
Cesarean Section
Cholecystectomy
Coronary Artery Angioplasty
Coronary Artery Bypass Graft
Esophagoscopy
Excision of Intervertebral Disk
Gastroduodenoscopy
Hip Replacement
Hysterectomy
Knee Replacement
Lower Back Surgery
Mastectomy
Meniscectomy
Myringotomy
Pacemaker Implantation
Prostatectomy
Rhinoplasty
Septectomy with Rhinoplasty
Tonsillectomy
Tubal Transection and/or Ligation
Tympanoplasty
Tympanotomy Tube

MEDICAL PROCEDURES

Lower Back Medical Care

DIAGNOSTIC PROCEDURES

Cardiac Catheterization
CAT SCAN
Cystoscopy
Magnetic Resonance Imaging

OTHER SERVICES AND SUPPLIES

Home Health Care
Skilled Nursing Care
Maternity Care (See STEP 2 (a))
Hospice Care
Infusion Therapy

STEP 2—Notice Requirements

If We are notified within the required time and We Determine that the procedures, services or supplies are Medically Necessary and Appropriate, Our Payment will not be affected. **IF WE ARE NOT NOTIFIED WITHIN THE TIME SPECIFIED, WE WILL REDUCE ANY PAYMENT BY 50%.**

(a) For **Non-Medical Emergency** hospitalizations, procedures, services or supplies listed above, You or Your Practitioner must **contact Us at least 3 days prior to admission, treatment or purchase** to obtain Our authorization. We will provide You or Your Practitioner with Our Determination within those 3 days. However, for **maternity care,** You or Your Practitioner must contact Us **within the first 12 weeks of medical confirmation**

You're viewing an archived copy from the New Jersey State Library.

of a pregnancy. We will send You or Your Practitioner Our acknowledgement of the pregnancy within 7 days.

(b) For **Medical Emergency** hospitalizations, procedures, services or supplies You or Your Practitioner must contact Us **within 48 hours or on the next business day (whichever is later),** from the commencement of hospitalization, treatment, or use of supplies, whichever is later, to obtain Our authorization. We will provide You or Your Practitioner with Our Determination within 48 hours.

(c) For **Continued Confinement** as an Inpatient beyond the time authorized, You or Your Provider must contact us **at least 1 full day, i.e. 24 hours, prior to the preapproved discharge date,** for additional authorization. We will provide You or Your Practitioner with Our Determination within those 24 hours.

In the event We are not able to provide You or Your Practitioner with a Determination within the time frames stated, We will tell You and Your Practitioner before the mid-point of the time stated, ***or the next business day, whichever is later,*** as well as put in writing to You, what specific information is needed to make that Determination. ***In the event We do not respond to You or Your Practitioner within these time frames, We will not apply the 50% reduction of benefits as allowed by this Utilization Review section to Covered Charges incurred between the time You or Your Practitioner notify Us and We respond to You.***

In the event We do not authorize the hospitalization, procedure, service or supplies, We will send You a written statement within 7 days, explaining the specific reasons for denial of the authorization. Any such denial of Our authorization is subject to Your rights under the "Claims Appeal" section of the "Claims Procedure" provision of this Policy.

Failure to notify Us of the procedures, services or supplies listed above will not affect Our payment if We Determine that notice was given to Us as soon as was reasonably possible.

STEP 3—Obtaining a Second Opinion

You may always obtain a second opinion when You are advised to have Surgery or be hospitalized. We may **require** that You obtain a second opinion if We Determine that it is necessary in order for Us to authorize a surgical procedure or hospital admission. If We Determine that a second opinion is necessary, We may arrange for the second opinion consultation. Regardless of whether the second opinion is at Our request or Yours, We will pay for the consultation and for any Diagnostic Services and Pre-Admission Testing necessary for the second opinion, subject to all Policy limitations and exclusions.

If the second opinion confirms the need for a surgical procedure, We, in consultation with Your Practitioner, will authorize the appropriate setting (Inpatient or Outpatient) for the proposed procedure. If We approve an Inpatient admission, You or Your Practitioner may proceed with the admission and Our payment will not be affected.

IF WE DO NOT AUTHORIZE AN INPATIENT ADMISSION FOR PERFORMANCE OF THE PROCEDURE AND YOU PROCEED WITH THAT ADMISSION, ANY PAYMENT FOR FACILITY CHARGES WILL BE REDUCED BY 50%.

IF YOU DO NOT OBTAIN A SECOND OPINION WHICH WE ASK YOU TO OBTAIN, OUR PAYMENT WILL BE REDUCED BY 20% PROVIDED WE DETERMINE THE HOSPITALIZATION OR PERFORMANCE OF THE SURGICAL PROCEDURE WAS MEDICALLY NECESSARY AND APPROPRIATE. IF WE DETERMINE THAT PERFORMANCE OF THE SURGICAL PROCEDURE OR THE HOSPITALIZATION WAS NOT MEDICALLY NECESSARY AND APPROPRIATE, WE WILL NOT MAKE ANY PAYMENT.

A confirming second opinion is valid for 90 days. If You do not undergo the surgical procedure or become hospitalized within that time, You or Your Practitioner must notify Us and renew the confirming opinion prior to the hospital admission or the procedure being performed. If the confirming opinion is not renewed, We may consider the confirming opinion not authorized.

If the second opinion does not confirm the need for the surgical procedure or hospital admission, You may obtain or We may require You obtain a third opinion.

STEP 4—Obtaining a Third Opinion

If you obtained a second opinion and it did not confirm the need for the surgical procedure or hospital admission, You may obtain or We may require You to obtain a third opinion. Regardless of whether the third opinion is at Our request or Yours, We will pay for the consultation and for any Diagnostic Services and Pre-Admission Testing necessary for the third opinion, subject to all Policy limitations and exclusions.

IF THE SECOND AND THIRD OPINIONS DO NOT CONFIRM THE NEED FOR THE SURGICAL PROCEDURE OR HOSPITAL ADMISSION AND YOU PROCEED WITH THE PROCEDURE OR HOSPITALIZATION, WE WILL NOT PAY FOR THE PROCEDURE OR HOSPITALIZATION NOR ANY ASSOCIATED PRACTITIONER (INCLUDING FACILITY) CHARGES.

IF YOU DO NOT OBTAIN A THIRD OPINION WHICH WE HAVE ASKED YOU TO OBTAIN, OUR PAYMENT FOR THE PROCEDURE OR HOSPITALIZATION WILL BE REDUCED BY 20% PROVIDED WE DETERMINE THE PERFORMANCE OF THE PROCEDURE OR THE HOSPITALIZATION WAS MEDICALLY NECESSARY AND APPROPRIATE. IF WE DETERMINE THAT PERFORMANCE OF THE PROCEDURE OR THE HOSPITALIZATION WAS NOT MEDICALLY NECESSARY AND APPROPRIATE, WE WILL NOT MAKE ANY PAYMENT.

A confirming third opinion is valid for 90 days. If you do not undergo the procedure or become hospitalized within that time, You or Your Practitioner must notify Us and renew the confirming opinion prior to the procedure being performed or the hospitalization. If the confirming opinion is not renewed, We may consider the confirming opinion not authorized.

. . .

XII. [XIV.] [XV.] GENERAL PROVISIONS

. . .

TERMINATION OF THE POLICY—RENEWAL PRIVILEGE

During or at End of Grace Period—Failure to Pay Premiums: If any Premium is not paid by the end of its grace period, the Policy will end when that period ends. **However,** You may write to Us, in advance, to ask that the Policy be terminated at the end of any period for which Premiums have been paid. Then the Policy will end on the date requested.

This Policy will be renewed automatically each year on the Anniversary Date, unless one of the following circumstances occur:

(a) nonpayment of Premiums;
(b) fraud or misrepresentation by You or Your Dependents;
(c) termination of Your eligibility or, with respect to Your Dependent, Your Dependent's Eligibility;
(d) You become eligible either for Medicare, Medicaid or to participate in a Group Health Benefits Plan which provides the same or similar coverage;
(e) **You became covered under another individual health benefits plan;**
(f) non-renewal as authorized by the Board.

Immediate cancellation will occur if You commit fraudulent acts or make misrepresentations with respect to coverage of You and Your Dependents.

EXHIBIT C

. . .

TABLE OF CONTENTS

Section — Page

. . .

V. BENEFIT DEDUCTIBLES AND COINSURANCE ...
Cash Deductible ...
Family Deductible Cap ...
Coinsurance Cap ...
Deductible Credit ...
Deductible Carryover ...
Payment Limits ...

. . .

VIII. UTILIZATION REVIEW ...
Request for Care Preapproval ...
Notice Requirements ...
Obtaining a Second Opinion ...
Obtaining a Third Opinion ...

. . .

XI. [XIII.] RIGHT TO RECOVERY—THIRD PARTY LIABILITY ...
XII. [XIV.] GENERAL PROVISIONS ...

. . .

You're viewing an archived copy from the New Jersey State Library.

II. ELIGIBILITY

TYPES OF COVERAGE

. . .

WHO IS ELIGIBLE

(a) **THE POLICYHOLDER**—You, if Your Primary Residence is in the State of New Jersey, **You are not covered under another individual health benefits plan,** and You are not eligible for Medicare, Medicaid or a Group Health Benefits Plan that provides the same or similar coverage.

(b) **SPOUSE**—Your Spouse, **who is not covered under another individual health benefits plan, and** who is not eligible for Medicare, Medicaid or a Group Health Benefits Plan that provides the same or similar coverage.

(c) **CHILD**—Your Child, **who is not covered under another individual health benefits plan,** who is not eligible for Medicare, Medicaid or a Group Health Benefits Plan that provides the same or similar coverage, and who qualifies as a Dependent, as those terms are defined in the "Definition" section of this Policy.

NOTE: YOU AND/OR YOUR DEPENDENTS ARE ELIGIBLE FOR COVERAGE UNDER THIS POLICY IF THIS POLICY REPLACES ANOTHER INDIVIDUAL HEALTH BENEFITS PLAN UNDER WHICH YOU AND/OR YOUR DEPENDENTS ARE COVERED. *_THE OTHER PLAN MUST BE TERMINATED NO LATER THAN 30 DAYS AFTER THE EFFECTIVE DATE OF THIS POLICY._* WE MAY REQUIRE PROOF THAT THE OTHER COVERAGE HAS BEEN TERMINATED.

V. BENEFIT DEDUCTIBLES AND COINSURANCE

. . .

*{**Benefits From Other Plans:** When another plan furnishes benefits which are similar to Ours, We coordinate Our benefits with the benefits from that other plan. However, You are not eligible for coverage under this Policy if You are eligible for benefits under a Group Health Benefits Plan that provides the same or similar coverage. We do this so that no one gets more in benefits than are incurred in charges. Read the section of this Policy called "Coordination of Benefits" to see how this works.}*

VIII. UTILIZATION REVIEW

***{OUR PAYMENT WILL BE REDUCED AS INDICATED BELOW FOR NONCOMPLIANCE WITH THE PROVISIONS SET FORTH IN THIS SECTION. YOU WILL BE RESPONSIBLE FOR PAYING TO THE PROVIDER THE AMOUNT OF THE REDUCTION (IN ADDITION TO ANY OTHER PAYMENTS YOU ARE REQUIRED TO MAKE UNDER THIS POLICY).**

We are not responsible for medical or other results arising directly or indirectly from Your participation or lack of participation in this Utilization Review program.

STEP 1—Request For Care Preapproval

If Your Provider recommends that You (a) be admitted, for any reason, as an Inpatient (except for a normal vaginal delivery); or (b) undergo any of the Surgical procedures or other services or supplies listed below, **You must first obtain Our authorization to Determine whether We agree that the Surgery or other services and supplies are Medically Necessary and Appropriate.**

SURGICAL PROCEDURES

Adenoidectomy
Arthroscopy
Bunionectomy
Carpal Tunnel Surgery
Cesarean Section
Cholecystectomy
Coronary Artery Angioplasty
Coronary Artery Bypass Graft
Esophagoscopy
Excision of Intervertebral Disk
Gastroduodenoscopy
Hip Replacement
Hysterectomy
Knee Replacement
Lower Back Surgery
Mastectomy
Meniscectomy
Myringotomy
Pacemaker Implantation
Prostatectomy
Rhinoplasty
Septectomy with Rhinoplasty
Tonsillectomy
Tubal Transection and/or Ligation
Tympanoplasty
Tympanotomy Tube

MEDICAL PROCEDURES

Lower Back Medical Care

DIAGNOSTIC PROCEDURES

Cardiac Catheterization
CAT SCAN
Cystoscopy
Magnetic Resonance Imaging

OTHER SERVICES AND SUPPLIES

Home Health Care
Skilled Nursing Care
Hospice Care
Infusion Therapy

To obtain Our authorization, You or Your Provider must request Our review. In some instances, before We authorize the procedures, services and supplies listed above, We may require a second opinion. See "Step 3" below.

IF YOU DO NOT REQUEST OUR AUTHORIZATION, OR IF WE DO NOT AUTHORIZE THE PROCEDURES, SERVICES AND SUPPLIES WE WILL REDUCE ANY PAYMENT WE MAKE BY 50%. ANY REDUCTION OF BENEFITS UNDER THIS PROVISION ARE SUBJECT TO YOUR RIGHTS UNDER THE CLAIMS APPEAL SECTION OF THE CLAIMS PROCEDURE PROVISION OF THIS POLICY.

STEP 2—Notice Requirements

For **Non-Medical Emergency** procedures, services and supplies listed above, You or Your Provider must **contact Us at least 3 days prior to treatment** or purchase.

For **Medical Emergency procedures, services and supplies** You or Your Provider must contact Us **within 48 hours or on the next business day,** from treatment whichever is later.

[For **Continued Confinement** as an Inpatient beyond the time authorized, You or Your Provider must contact us within 24 hours prior to preapproved discharge date for additional authorization.]

If We are notified within the required time and We Determine that the procedures, services and supplies are Medically Necessary and Appropriate, Our Payment will not be affected—We will pay up to the limits of this Policy. **IF WE ARE NOT NOTIFIED WITHIN THE TIME SPECIFIED, WE WILL REDUCE ANY PAYMENT BY 50%.**

Failure to notify Us of the procedures, services or supplies listed above will not affect Our payment if We Determine that notice was given to Us as soon as was reasonably possible.

STEP 3—Obtain a Second Opinion

If We Determine that a second opinion is not necessary for the proposed procedure, then You should proceed with Step 4 below.

If We Determine that a second opinion is necessary, We will arrange for a second opinion consultation prior to Your undergoing the medical, diagnostic or surgical procedure or being admitted as an Inpatient. We will pay for this consultation and for any Diagnostic Services and Pre-Admission Testing necessary for the second opinion, subject to all Policy limitations and exclusions.

If the second opinion confirms the need for the procedure, then You should proceed with Step 4 below.

If the second opinion does not confirm the need for the procedure, We may require You to get a third opinion. If that happens, We will arrange and pay for the third opinion. If the third opinion confirms the need for the procedure, You should then proceed with Step 4 below.

NOTE: We will only pay for a second or third surgical opinion which We authorize and arrange.

IF THE SECOND AND THIRD OPINION DO NOT CONFIRM THE NEED FOR THE PROCEDURE, AND YOU PROCEED WITH THE PROCEDURE, **WE WILL NOT PAY FOR THE PROCEDURE**

You're viewing an archived copy from the New Jersey State Library.

NOR ANY ASSOCIATED **PROVIDER** (INCLUDING FACILITY) **CHARGES**. IF YOU DO NOT OBTAIN A SECOND AND/OR THIRD OPINION WHICH WE HAVE ASKED YOU TO OBTAIN, **OUR PAYMENT** FOR THE PROCEDURE **WILL BE REDUCED BY 20%** PROVIDED WE DETERMINE THE PERFORMANCE OF THE PROCEDURE WAS MEDICALLY NECESSARY AND APPROPRIATE; IF WE DETERMINE THAT PERFORMANCE OF THE PROCEDURE WAS NOT MEDICALLY APPROPRIATE, **WE WILL NOT MAKE ANY PAYMENT**.

A confirming second or third opinion is valid for 90 days. If You do not undergo the procedure within that time, You must call Us and renew the confirming opinion prior to the procedure being performed. If the confirming opinion is not renewed, We may consider the confirming opinion not authorized.

STEP 4—Obtain Hospital Admission Review

If You called for Our authorization and (a) We Determined that a second opinion was not necessary; or (b) You followed the second opinion process outlined in Step 3 above and the second opinion has confirmed the need for the procedure, We will then Determine what setting (Inpatient or Outpatient) is appropriate for the proposed procedure. If We approve an Inpatient admission, You may proceed with the admission and Our Payment will not be affected—We will pay up to the limits of this Policy. **IF WE DO NOT AUTHORIZE AN INPATIENT ADMISSION AND YOU PROCEED WITH THAT ADMISSION, ANY PAYMENT FOR FACILITY CHARGES WILL BE REDUCED BY 50%.**

Our approval is valid for 30 days. If the admission does not occur as planned, You or Your Provider must contact Us to renew the approval. If the approval is not renewed, We will consider the Inpatient admission not authorized.}*

THE DECISIONS MADE BY OUR REPRESENTATIVE(S) IN THIS UTILIZATION REVIEW PROGRAM ARE INTENDED ONLY TO DETERMINE THE EXTENT OF REIMBURSEMENT FOR A SERVICE.

OUR PAYMENT WILL BE REDUCED FOR NONCOMPLIANCE WITH THE PROVISIONS SET FORTH IN THIS SECTION.

A. IF YOU OR YOUR PRACTITIONER DO NOT REQUEST OUR AUTHORIZATION, OR IF, AFTER CONSIDERATION OF SUCH A REQUEST, WE DO NOT AUTHORIZE A HOSPITAL ADMISSION OR PROCEDURE, SERVICES OR SUPPLIES AS REQUIRED IN THIS SECTION, WE WILL REDUCE ANY PAYMENT WE MAKE BY 50% PROVIDED WE DETERMINE THE HOSPITAL ADMISSION, PROCEDURE, SERVICE OR SUPPLIES WERE MEDICALLY NECESSARY AND APPROPRIATE. IF WE DETERMINE THAT PERFORMANCE OF THE PROCEDURE OR THE HOSPITALIZATION WAS NOT MEDICALLY NECESSARY AND APPROPRIATE, WE WILL NOT MAKE ANY PAYMENT.

B. IF YOU DO NOT OBTAIN A SECOND AND/OR THIRD OPINION WHICH WE ASK YOU TO OBTAIN FOR PERFORMANCE OF A SURGICAL PROCEDURE OR HOSPITAL ADMISSION, ANY PAYMENT WE MAKE WILL BE REDUCED BY 20% PROVIDED WE DETERMINE THE HOSPITALIZATION OR PERFORMANCE OF THE PROCEDURE WAS MEDICALLY NECESSARY AND APPROPRIATE. IF WE DETERMINE THAT PERFORMANCE OF THE PROCEDURE OR THE HOSPITALIZATION WAS NOT MEDICALLY NECESSARY AND APPROPRIATE, WE WILL NOT MAKE ANY PAYMENT.

C. IF YOU OBTAIN A SECOND AND THIRD OPINION FOR PERFORMANCE OF A SURGICAL PROCEDURE OR HOSPITAL ADMISSION, AND THE OPINIONS DO NOT CONFIRM THE NEED FOR THE PROCEDURE OR HOSPITALIZATION AND YOU PROCEED WITH THE PROCEDURE OR HOSPITALIZATION, WE WILL NOT PAY FOR THE PROCEDURE OR HOSPITALIZATION NOR ANY ASSOCIATED PRACTITIONER (INCLUDING FACILITY) CHARGES.

YOU WILL BE RESPONSIBLE FOR PAYING TO THE PROVIDER THE AMOUNT OF ANY REDUCTION OF BENEFITS (IN ADDITION TO ANY OTHER PAYMENTS YOU ARE REQUIRED TO MAKE UNDER THIS POLICY).

Any reduction of benefits under this provision is subject to Your rights under the "Claims Appeal" section of the "Claims Procedure" provision of this Policy.

STEP 1—Request For Care Preapproval

If Your Practitioner recommends that You (a) be admitted, for any reason, as an Inpatient; or (b) undergo any of the Surgical procedures or receive other services or supplies listed below, You must first obtain Our authorization to Determine whether We agree that the hospitalization, procedures or other services and supplies are Medically Necessary and Appropriate.

Failure to notify Us of the procedures, services or supplies as provided in Step 2 below, will not affect Our payment if We Determine that notice was given to Us as soon as was reasonably possible.

In some instances, before We authorize a hospitalization or the performance of a surgical procedure listed, We may require a second and/or third opinion. See "Step 3" and "Step 4" below.

Our authorization is valid for 30 days. If the hospitalization, procedure, service or use of the supply does not occur as planned, You or Your Practitioner must contact Us to renew the authorization. If the authorization is not renewed, We will consider the hospitalization, procedure, service or supply as not authorized.

If You or Your Practitioner obtain Our authorization for one of the listed procedures, We, in consultation with Your Practitioner, will authorize the appropriate setting (Inpatient or Outpatient) for the proposed procedure. If We approve an Inpatient admission, You or Your Practitioner may proceed with the admission and Our Payment will not be affected. ***IF WE DO NOT AUTHORIZE AN INPATIENT ADMISSION AND YOU PROCEED WITH THAT ADMISSION, ANY PAYMENT FOR FACILITY CHARGES WILL BE REDUCED BY 50%.***

PROCEDURES, SERVICES AND SUPPLIES REQUIRING PREAPPROVAL

SURGICAL PROCEDURES

Adenoidectomy
Arthroscopy
Bunionectomy
Carpal Tunnel Surgery
Cesarean Section
Cholecystectomy
Coronary Artery Angioplasty
Coronary Artery Bypass Graft
Esophagoscopy
Excision of Intervertebral Disk
Gastroduodenoscopy
Hip Replacement
Hysterectomy
Knee Replacement
Lower Back Surgery
Mastectomy
Meniscectomy
Myringotomy
Pacemaker Implantation
Prostatectomy
Rhinoplasty
Septectomy with Rhinoplasty
Tonsillectomy
Tubal Transection and/or Ligation
Tympanoplasty
Tympanotomy Tube

MEDICAL PROCEDURES

Lower Back Medical Care

DIAGNOSTIC PROCEDURES

Cardiac Catheterization
CAT SCAN
Cystoscopy
Magnetic Resonance Imaging

OTHER SERVICES AND SUPPLIES

Home Health Care
Skilled Nursing Care
Maternity Care (See STEP 2 (a))
Hospice Care
Infusion Therapy

You're viewing an archived copy from the New Jersey State Library.

STEP 2—Notice Requirements

If We are notified within the required time and We Determine that the procedures, services or supplies are Medically Necessary and Appropriate, Our Payment will not be affected. ***IF WE ARE NOT NOTIFIED WITHIN THE TIME SPECIFIED, WE WILL REDUCE ANY PAYMENT BY 50%.***

(a) For ***Non-Medical Emergency*** **hospitalizations, procedures, services or supplies listed above, You or Your Practitioner must** ***contact Us at least 3 days prior to admission, treatment or purchase*** **to obtain Our authorization. We will provide You or Your Practitioner with Our Determination within those 3 days. However, for** ***maternity care,*** **You or Your Practitioner must contact Us** ***within the first 12 weeks of medical confirmation*** **of a pregnancy. We will send You or Your Practitioner Our acknowledgement of the pregnancy within 7 days.**

(b) For ***Medical Emergency*** **hospitalizations, procedures, services or supplies You or Your Practitioner must contact Us** ***within 48 hours or on the next business day (whichever is later),*** **from the commencement of hospitalization, treatment, or use of supplies, whichever is later, to obtain Our authorization. We will provide You or Your Practitioner with Our Determination within 48 hours.**

(c) For ***Continued Confinement*** **as an Inpatient beyond the time authorized, You or Your Provider must contact us** ***at least 1 full day, i.e. 24 hours, prior to the preapproved discharge date,*** **for additional authorization. We will provide You or Your Practitioner with Our Determination within those 24 hours.**

In the event We are not able to provide You or Your Practitioner with a Determination within the time frames stated, We will tell You and Your Practitioner before the mid-point of the time stated, ***or the next business day, whichever is later,*** **as well as put in writing to You, what specific information is needed to make that Determination.** ***In the event We do not respond to You or Your Practitioner within these time frames, We will not apply the 50% reduction of benefits as allowed by this Utilization Review section to Covered Charges incurred between the time You or Your Practitioner notify Us and We respond to You.***

In the event We do not authorize the hospitalization, procedure, service or supplies, We will send You a written statement within 7 days, explaining the specific reasons for denial of the authorization. Any such denial of Our authorization is subject to Your rights under the "Claims Appeal" section of the "Claims Procedure" provision of this Policy.

Failure to notify Us of the procedures, services or supplies listed above will not affect Our payment if We Determine that notice was given to Us as soon as was reasonably possible.

STEP 3—Obtaining a Second Opinion

You may always obtain a second opinion when You are advised to have Surgery or be hospitalized. We may ***require*** **that You obtain a second opinion if We Determine that it is necessary in order for Us to authorize a surgical procedure or hospital admission. If We Determine that a second opinion is necessary, We may arrange for the second opinion consultation. Regardless of whether the second opinion is at Our request or Yours, We will pay for the consultation and for any Diagnostic Services and Pre-Admission Testing necessary for the second opinion, subject to all Policy limitations and exclusions.**

If the second opinion confirms the need for a surgical procedure, We, in consultation with Your Practitioner, will authorize the appropriate setting (Inpatient or Outpatient) for the proposed procedure. If We approve an Inpatient admission, You or Your Practitioner may proceed with the admission and Our payment will not be affected.

IF WE DO NOT AUTHORIZE AN INPATIENT ADMISSION FOR PERFORMANCE OF THE PROCEDURE AND YOU PROCEED WITH THAT ADMISSION, ANY PAYMENT FOR FACILITY CHARGES WILL BE REDUCED BY 50%.

IF YOU DO NOT OBTAIN A SECOND OPINION WHICH WE ASK YOU TO OBTAIN, OUR PAYMENT WILL BE REDUCED BY 20% PROVIDED WE DETERMINE THE HOSPITALIZATION OR PERFORMANCE OF THE SURGICAL PROCEDURE WAS MEDICALLY NECESSARY AND APPROPRIATE. IF WE DETERMINE THAT PERFORMANCE OF THE SURGICAL PROCEDURE OR THE HOSPITALIZATION WAS NOT MEDICALLY NECESSARY AND APPROPRIATE, WE WILL NOT MAKE ANY PAYMENT.

A confirming second opinion is valid for 90 days. If You do not undergo the surgical procedure or become hospitalized within that time, You or Your Practitioner must notify Us and renew the confirming opinion prior to the hospital admission or the procedure being performed. If the confirming opinion is not renewed, We may consider the confirming opinion not authorized.

If the second opinion does not confirm the need for the surgical procedure or hospital admission, You may obtain or We may require You obtain a third opinion.

STEP 4—Obtaining a Third Opinion

If you obtained a second opinion and it did not confirm the need for the surgical procedure or hospital admission, You may obtain or We may require You to obtain a third opinion. Regardless of whether the third opinion is at Our request or Yours, We will pay for the consultation and for any Diagnostic Services and Pre-Admission Testing necessary for the third opinion, subject to all Policy limitations and exclusions.

IF THE SECOND AND THIRD OPINIONS DO NOT CONFIRM THE NEED FOR THE SURGICAL PROCEDURE OR HOSPITAL ADMISSION AND YOU PROCEED WITH THE PROCEDURE OR HOSPITALIZATION, WE WILL NOT PAY FOR THE PROCEDURE OR HOSPITALIZATION NOR ANY ASSOCIATED PRACTITIONER (INCLUDING FACILITY) CHARGES.

IF YOU DO NOT OBTAIN A THIRD OPINION WHICH WE HAVE ASKED YOU TO OBTAIN, OUR PAYMENT FOR THE PROCEDURE OR HOSPITALIZATION WILL BE REDUCED BY 20% PROVIDED WE DETERMINE THE PERFORMANCE OF THE PROCEDURE OR THE HOSPITALIZATION WAS MEDICALLY NECESSARY AND APPROPRIATE. IF WE DETERMINE THAT PERFORMANCE OF THE PROCEDURE OR THE HOSPITALIZATION WAS NOT MEDICALLY NECESSARY AND APPROPRIATE, WE WILL NOT MAKE ANY PAYMENT.

A confirming third opinion is valid for 90 days. If you do not undergo the procedure or become hospitalized within that time, You or Your Practitioner must notify Us and renew the confirming opinion prior to the procedure being performed or the hospitalization. If the confirming opinion is not renewed, We may consider the confirming opinion not authorized.*

***{XI. [XIII.] COORDINATION OF BENEFITS**

This provision applies to all Covered Charges under this Policy.

If You incur Covered Charges under this Policy and these same expenses are covered under Other Valid Coverage, Our Payment will be reduced so as not to exceed Our pro-rata share of the total coverage available. If We reduce Our Payment on a pro-rata basis, We will also return a pro-rata share of the Premium to You.

To determine Our pro-rata Payment, We will:

(a) add together Our benefits (calculated without reference to Other Valid Coverage) and the amount(s) payable (for the same Covered Charges) under Other Valid Coverage of which We had notice;

(b) add together Our benefits (calculated without reference to Other Valid Coverage) and the amount(s) payable (for the same Covered Charges) under all Other Valid Coverage (whether or not We had notice);

(c) divide the total in (1) by the total in (2) to calculate a percentage; and

(d) multiply the percentage calculated in step (3) by the Covered Charges; the result is Our payment.

"Other Valid Coverage" means coverage, other than Ours, provided on a group or individual basis, by insurance companies, hospital or medical service organizations, health maintenance organizations, union welfare plans, employer or employee benefit organizations, and employers; it also includes automobile medical payments insurance (other than that required by New Jersey law). If Other Valid Coverage is on a provision of service basis, "the amount(s) payable under Other Valid Coverage" shall be equal to the amount which the services rendered would have cost in the absence of such coverage.

Our Right To Certain Information: In order to coordinate benefits, We need certain information. You must supply Us with as much of that information as You can. But if You cannot give Us all the information We need, We have the right to get this information from any source. If another insurer needs information to apply its coordination provision, We have the right to give that insurer such information. If We give or get information under this section We cannot be held liable for such action. When payment that should have been made by this Policy have been made by another plan, We have the right to repay that plan. If

You're viewing an archived copy from the New Jersey State Library.

We do so, We are no longer liable for that amount. If We pay out more than We should have, We have the right to recover the excess payment.

Small Claims Waiver: We do not coordinate payments on claims of less than $50.00. But if, during any claim determination period, more Covered Charges are incurred that raise the claim above $50.00 We will count the entire amount of the claim when We coordinate.}*

XII. [XIV.] *{[XV.]}* GENERAL PROVISIONS

. . .

TERMINATION OF THE POLICY—RENEWAL PRIVILEGE

During or at End of Grace Period—Failure to Pay Premiums: If any Premium is not paid by the end of its grace period, the Policy will end when that period ends. *{But}* ***However,*** You may write to Us, in advance, to ask that the Policy be terminated at the end of any period for which Premiums have been paid. Then the Policy will end on the date requested.

This Policy will be renewed automatically each year on the Anniversary Date, unless one of the following circumstances occur:

(a) nonpayment of Premiums;
(b) fraud or misrepresentation by You or Your Dependents;
(c) termination of Your eligibility or, with respect to Your Dependent, Your Dependent's Eligibility;
(d) You become eligible either for Medicare, Medicaid or to participate in a Group Health Benefits Plan which provides the same or similar coverage;
(e) *{non-renewal as authorized by the Board.}* ***You become covered under another individual health benefits plan;***
(f) non-renewal as authorized by the Board.*

Immediate cancellation will occur if You commit fraudulent acts or make misrepresentations with respect to coverage of You and Your Dependents.

EXHIBIT D

. . .

TABLE OF CONTENTS

Section Page

. . .

VIII. UTILIZATION REVIEW .....
Request for Care Preapproval .....
Notice Requirements .....
Obtaining a Second Opinion .....
Obtaining a Third Opinion .....

. . .

XI. [XIII.] RIGHT TO RECOVERY—THIRD PARTY LIABILITY .....
XII. [XIV.] GENERAL PROVISIONS .....

. . .

II. ELIGIBILITY

TYPES OF COVERAGE

. . .

WHO IS ELIGIBLE

(a) **THE POLICYHOLDER**—You, if Your Primary Residence is in the State of New Jersey, **You are not covered under another individual health benefits plan,** and You are not eligible for Medicare, Medicaid or a Group Health Benefits Plan that provides the same or similar coverage.
(b) **SPOUSE**—Your Spouse, **who is not covered under another individual health benefits plan, and** who is not eligible for Medicare, Medicaid or a Group Health Benefits Plan that provides the same or similar coverage.
(c) **CHILD**—Your Child, **who is not covered under another individual health benefits plan,** who is not eligible for Medicare, Medicaid or a Group Health Benefits Plan that provides the same or similar coverage, and who qualifies as a Dependent, as those terms are defined in the "Definition" section of this Policy.

NOTE: YOU AND/OR YOUR DEPENDENTS ARE ELIGIBLE FOR COVERAGE UNDER THIS POLICY IF THIS POLICY REPLACES ANOTHER INDIVIDUAL HEALTH BENEFITS PLAN UNDER WHICH YOU AND/OR YOUR DEPENDENTS ARE COVERED. *THE OTHER PLAN MUST BE TERMINATED NOT LATER THAN 30 DAYS AFTER THE EFFECTIVE DATE OF THIS POLICY.* WE MAY REQUIRE PROOF THAT THE OTHER COVERAGE HAS BEEN TERMINATED.

. . .

V. BENEFIT DEDUCTIBLES AND COINSURANCE

. . .

VIII. UTILIZATION REVIEW

THE DECISIONS MADE BY OUR REPRESENTATIVE(S) IN THIS UTILIZATION REVIEW PROGRAM ARE INTENDED ONLY TO DETERMINE THE EXTENT OF REIMBURSEMENT FOR A SERVICE.

OUR PAYMENT WILL BE REDUCED FOR NONCOMPLIANCE WITH THE PROVISIONS SET FORTH IN THIS SECTION.

A. IF YOU OR YOUR PRACTITIONER DO NOT REQUEST OUR AUTHORIZATION, OR IF, AFTER CONSIDERATION OF SUCH A REQUEST, WE DO NOT AUTHORIZE A HOSPITAL ADMISSION OR PROCEDURE, SERVICES OR SUPPLIES AS REQUIRED IN THIS SECTION, WE WILL REDUCE ANY PAYMENT WE MAKE BY 50% PROVIDED WE DETERMINE THE HOSPITAL ADMISSION, PROCEDURE, SERVICE OR SUPPLIES WERE MEDICALLY NECESSARY AND APPROPRIATE. IF WE DETERMINE THAT PERFORMANCE OF THE PROCEDURE OR THE HOSPITALIZATION WAS NOT MEDICALLY NECESSARY AND APPROPRIATE, WE WILL NOT MAKE ANY PAYMENT.

B. IF YOU DO NOT OBTAIN A SECOND AND/OR THIRD OPINION WHICH WE ASK YOU TO OBTAIN FOR PERFORMANCE OF A SURGICAL PROCEDURE OR HOSPITAL ADMISSION, ANY PAYMENT WE MAKE WILL BE REDUCED BY 20% PROVIDED WE DETERMINE THE HOSPITALIZATION OR PERFORMANCE OF THE PROCEDURE WAS MEDICALLY NECESSARY AND APPROPRIATE. IF WE DETERMINE THAT PERFORMANCE OF THE PROCEDURE OR THE HOSPITALIZATION WAS NOT MEDICALLY NECESSARY AND APPROPRIATE, WE WILL NOT MAKE ANY PAYMENT.

C. IF YOU OBTAIN A SECOND AND THIRD OPINION FOR PERFORMANCE OF A SURGICAL PROCEDURE OR HOSPITAL ADMISSION, AND THE OPINIONS DO NOT CONFIRM THE NEED FOR THE PROCEDURE OR HOSPITALIZATION AND YOU PROCEED WITH THE PROCEDURE OR HOSPITALIZATION, WE WILL NOT PAY FOR THE PROCEDURE OR HOSPITALIZATION NOR ANY ASSOCIATED PRACTITIONER (INCLUDING FACILITY) CHARGES.

YOU WILL BE RESPONSIBLE FOR PAYING TO THE PROVIDER THE AMOUNT OF ANY REDUCTION OF BENEFITS (IN ADDITION TO ANY OTHER PAYMENTS YOU ARE REQUIRED TO MAKE UNDER THIS POLICY).

Any reduction of benefits under this provision is subject to Your rights under the "Claims Appeal" section of the "Claims Procedure" provision of this Policy.

STEP 1—Request For Care Preapproval

If Your Practitioner recommends that You (a) be admitted, for any reason, as an Inpatient; or (b) undergo any of the Surgical procedures or receive other services or supplies listed below, You must first obtain Our authorization to Determine whether We agree that the hospitalization, procedures or other services and supplies are Medically Necessary and Appropriate.

Failure to notify Us of the procedures, services or supplies as provided in Step 2 below, will not affect Our payment if We Determine that notice was given to Us as soon as was reasonably possible.

In some instances, before We authorize a hospitalization or the performance of a surgical procedure listed, We may require a second and/or third opinion. See "Step 3" and "Step 4" below.

Our authorization is valid for 30 days. If the hospitalization, procedure, service or use of the supply does not occur as planned, You or Your Practitioner must contact Us to renew the authorization. If the authorization is not renewed, We will consider the hospitalization, procedure, service or supply as not authorized.

If You or Your Practitioner obtain Our authorization for one of the listed procedures, We, in consultation with Your Practitioner, will authorize the appropriate setting (Inpatient or Outpatient) for the

You're viewing an archived copy from the New Jersey State Library.

proposed procedure. If We approve an Inpatient admission, You or Your Practitioner may proceed with the admission and Our Payment will not be affected. **IF WE DO NOT AUTHORIZE AN INPATIENT ADMISSION AND YOU PROCEED WITH THAT ADMISSION, ANY PAYMENT FOR FACILITY CHARGES WILL BE REDUCED BY 50%.**

PROCEDURES, SERVICES AND SUPPLIES REQUIRING PREAPPROVAL

SURGICAL PROCEDURES

Adenoidectomy
Arthroscopy
Bunionectomy
Carpal Tunnel Surgery
Cesarean Section
Cholecystectomy
Coronary Artery Angioplasty
Coronary Artery Bypass Graft
Esophagoscopy
Excision of Intervertebral Disk
Gastroduodenoscopy
Hip Replacement
Hysterectomy
Knee Replacement
Lower Back Surgery
Mastectomy
Meniscectomy
Myringotomy
Pacemaker Implantation
Prostatectomy
Rhinoplasty
Septectomy with Rhinoplasty
Tonsillectomy
Tubal Transection and/or Ligation
Tympanoplasty
Tympanotomy Tube

MEDICAL PROCEDURES

Lower Back Medical Care

DIAGNOSTIC PROCEDURES

Cardiac Catheterization
CAT SCAN
Cystoscopy
Magnetic Resonance Imaging

OTHER SERVICES AND SUPPLIES

Home Health Care
Skilled Nursing Care
Maternity Care (See STEP 2 (a))
Hospice Care
Infusion Therapy

STEP 2—Notice Requirements

If We are notified within the required time and We Determine that the procedures, services or supplies are Medically Necessary and Appropriate, Our Payment will not be affected. **IF WE ARE NOT NOTIFIED WITHIN THE TIME SPECIFIED, WE WILL REDUCE ANY PAYMENT BY 50%.**

(a) For **Non-Medical Emergency** hospitalizations, procedures, services or supplies listed above, You or Your Practitioner must **contact Us at least 3 days prior to admission, treatment or purchase** to obtain Our authorization. We will provide You or Your Practitioner with Our Determination within those 3 days. However, for **maternity care,** You or Your Practitioner must contact Us **within the first 12 weeks of medical confirmation** of a pregnancy. We will send You or Your Practitioner Our acknowledgement of the pregnancy within 7 days.

(b) For **Medical Emergency** hospitalizations, procedures, services or supplies You or Your Practitioner must contact Us **within 48 hours or on the next business day (whichever is later),** from the commencement of hospitalization, treatment, or use of supplies, whichever is later, to obtain Our authorization. We will provide You or Your Practitioner with Our Determination within 48 hours.

(c) For **Continued Confinement** as an Inpatient beyond the time authorized, You or Your Provider must contact us **at least 1 full day, i.e. 24 hours, prior to the preapproved discharge date,** for additional authorization. We will provide You or Your Practitioner with Our Determination within those 24 hours.

In the event We are not able to provide You or Your Practitioner with a Determination within the time frames stated, We will tell You and Your Practitioner before the mid-point of the time stated, ***or the next business day, whichever is later,*** as well as put in writing to You, what specific information is needed to make that Determination. ***In the event We do not respond to You or Your Practitioner within these time frames, We will not apply the 50% reduction of benefits as allowed by this Utilization Review section to Covered Charges incurred between the time You or Your Practitioner notify Us and We respond to You.***

In the event We do not authorize the hospitalization, procedure, service or supplies, We will send You a written statement within 7 days, explaining the specific reasons for denial of the authorization. Any such denial of Our authorization is subject to Your rights under the "Claims Appeal" section of the "Claims Procedure" provision of this Policy.

Failure to notify Us of the procedures, services or supplies listed above will not affect Our payment if We Determine that notice was given to Us as soon as was reasonably possible.

STEP 3—Obtaining a Second Opinion

You may always obtain a second opinion when You are advised to have Surgery or be hospitalized. We may **require** that You obtain a second opinion if We Determine that it is necessary in order for Us to authorize a surgical procedure or hospital admission. If We Determine that a second opinion is necessary, We may arrange for the second opinion consultation. Regardless of whether the second opinion is at Our request or Yours, We will pay for the consultation and for any Diagnostic Services and Pre-Admission Testing necessary for the second opinion, subject to all Policy limitations and exclusions.

If the second opinion confirms the need for a surgical procedure, We, in consultation with Your Practitioner, will authorize the appropriate setting (Inpatient or Outpatient) for the proposed procedure. If We approve an Inpatient admission, You or Your Practitioner may proceed with the admission and Our payment will not be affected.

IF WE DO NOT AUTHORIZE AN INPATIENT ADMISSION FOR PERFORMANCE OF THE PROCEDURE AND YOU PROCEED WITH THAT ADMISSION, ANY PAYMENT FOR FACILITY CHARGES WILL BE REDUCED BY 50%.

IF YOU DO NOT OBTAIN A SECOND OPINION WHICH WE ASK YOU TO OBTAIN, OUR PAYMENT WILL BE REDUCED BY 20% PROVIDED WE DETERMINE THE HOSPITALIZATION OR PERFORMANCE OF THE SURGICAL PROCEDURE WAS MEDICALLY NECESSARY AND APPROPRIATE. IF WE DETERMINE THAT PERFORMANCE OF THE SURGICAL PROCEDURE OR THE HOSPITALIZATION WAS NOT MEDICALLY NECESSARY AND APPROPRIATE, WE WILL NOT MAKE ANY PAYMENT.

A confirming second opinion is valid for 90 days. If You do not undergo the surgical procedure or become hospitalized within that time, You or Your Practitioner must notify Us and renew the confirming opinion prior to the hospital admission or the procedure being performed. If the confirming opinion is not renewed, We may consider the confirming opinion not authorized.

If the second opinion does not confirm the need for the surgical procedure or hospital admission, You may obtain or We may require You obtain a third opinion.

STEP 4—Obtaining a Third Opinion

If you obtained a second opinion and it did not confirm the need for the surgical procedure or hospital admission, You may obtain or We may require You to obtain a third opinion. Regardless of whether the third opinion is at Our request or Yours, We will pay for the consultation and for any Diagnostic Services and Pre-Admission Testing necessary for the third opinion, subject to all Policy limitations and exclusions.

IF THE SECOND AND THIRD OPINIONS DO NOT CONFIRM THE NEED FOR THE SURGICAL PROCEDURE OR HOSPITAL ADMISSION AND YOU PROCEED WITH THE PROCEDURE OR HOSPITALIZATION, WE WILL NOT PAY FOR THE PROCEDURE OR HOSPITALIZATION NOR ANY ASSOCIATED PRACTITIONER (INCLUDING FACILITY) CHARGES.

IF YOU DO NOT OBTAIN A THIRD OPINION WHICH WE HAVE ASKED YOU TO OBTAIN, OUR PAYMENT FOR THE PROCEDURE OR HOSPITALIZATION WILL BE REDUCED BY 20% PROVIDED WE DETERMINE THE PERFORMANCE OF THE PROCEDURE OR THE HOSPITALIZATION WAS MEDICALLY NECESSARY AND AP-

You're viewing an archived copy from the New Jersey State Library.

PROPRIATE. IF WE DETERMINE THAT PERFORMANCE OF THE PROCEDURE OR THE HOSPITALIZATION WAS NOT MEDICALLY NECESSARY AND APPROPRIATE, WE WILL NOT MAKE ANY PAYMENT.

A confirming third opinion is valid for 90 days. If you do not undergo the procedure or become hospitalized within that time, You or Your Practitioner must notify Us and renew the confirming opinion prior to the procedure being performed or the hospitalization. If the confirming opinion is not renewed, We may consider the confirming opinion not authorized.

...

XII. [XIV.] [XV.] GENERAL PROVISIONS

...

TERMINATION OF THE POLICY—RENEWAL PRIVILEGE

During or at End of Grace Period—Failure to Pay Premiums: If any Premium is not paid by the end of its grace period, the Policy will end when that period ends. **However,** You may write to Us, in advance, to ask that the Policy be terminated at the end of any period for which Premiums have been paid. Then the Policy will end on the date requested.

This Policy will be renewed automatically each year on the Anniversary Date, unless one of the following circumstances occur:

(a) nonpayment of Premiums;
(b) fraud or misrepresentation by You or Your Dependents;
(c) termination of Your eligibility or, with respect to Your Dependent, Your Dependent's Eligibility;
(d) You become eligible either for Medicare, Medicaid or to participate in a Group Health Benefits Plan which provides the same or similar coverage;
(e) **You became covered under another individual health benefits plan;**
(f) non-renewal as authorized by the Board.

Immediate cancellation will occur if You commit fraudulent acts or make misrepresentations with respect to coverage of You and Your Dependents.

...

EXHIBIT E

...

TABLE OF CONTENTS

Section Page

...

VIII. UTILIZATION REVIEW .....
Request for Care Preapproval .....
Notice Requirements .....
Obtaining a Second Opinion .....
Obtaining a Third Opinion .....

...

XI. [XIII.] RIGHT TO RECOVERY—THIRD PARTY LIABILITY .....

XII. [XIV.] GENERAL PROVISIONS .....

...

II. ELIGIBILITY

...

WHO IS ELIGIBLE

(a) **THE POLICYHOLDER**—You, if Your Primary Residence is in the State of New Jersey, **You are not covered under another individual health benefits plan,** and You are not eligible for Medicare, Medicaid or a Group Health Benefits Plan that provides the same or similar coverage.
(b) **SPOUSE**—Your Spouse, **who is not covered under another individual health benefits plan, and** who is not eligible for Medicare, Medicaid or a Group Health Benefits Plan that provides the same or similar coverage.
(c) **CHILD**—Your Child, **who is not covered under another individual health benefits plan,** who is not eligible for Medicare, Medicaid or a Group Health Benefits Plan that provides the same or similar coverage, and who qualifies as a Dependent, as those terms are defined in the "Definition" section of this Policy.

NOTE: YOU AND/OR YOUR DEPENDENTS ARE ELIGIBLE FOR COVERAGE UNDER THIS POLICY IF THIS POLICY REPLACES ANOTHER INDIVIDUAL HEALTH BENEFITS PLAN UNDER WHICH YOU AND/OR YOUR DEPENDENTS ARE COVERED. *_THE OTHER PLAN MUST BE TERMINATED NO LATER THAN 30 DAYS AFTER THE EFFECTIVE DATE OF THIS POLICY._* WE MAY REQUIRE PROOF THAT THE OTHER COVERAGE HAS BEEN TERMINATED.

...

V. BENEFIT DEDUCTIBLES AND COINSURANCE

...

VIII. UTILIZATION REVIEW

THE DECISIONS MADE BY OUR REPRESENTATIVE(S) IN THIS UTILIZATION REVIEW PROGRAM ARE INTENDED ONLY TO DETERMINE THE EXTENT OF REIMBURSEMENT FOR A SERVICE.

OUR PAYMENT WILL BE REDUCED FOR NONCOMPLIANCE WITH THE PROVISIONS SET FORTH IN THIS SECTION.

A. IF YOU OR YOUR PRACTITIONER DO NOT REQUEST OUR AUTHORIZATION, OR IF, AFTER CONSIDERATION OF SUCH A REQUEST, WE DO NOT AUTHORIZE A HOSPITAL ADMISSION OR PROCEDURE, SERVICES OR SUPPLIES AS REQUIRED IN THIS SECTION, WE WILL REDUCE ANY PAYMENT WE MAKE BY 50% PROVIDED WE DETERMINE THE HOSPITAL ADMISSION, PROCEDURE, SERVICE OR SUPPLIES WERE MEDICALLY NECESSARY AND APPROPRIATE. IF WE DETERMINE THAT PERFORMANCE OF THE PROCEDURE OR THE HOSPITALIZATION WAS NOT MEDICALLY NECESSARY AND APPROPRIATE, WE WILL NOT MAKE ANY PAYMENT.

B. IF YOU DO NOT OBTAIN A SECOND AND/OR THIRD OPINION WHICH WE ASK YOU TO OBTAIN FOR PERFORMANCE OF A SURGICAL PROCEDURE OR HOSPITAL ADMISSION, ANY PAYMENT WE MAKE WILL BE REDUCED BY 20% PROVIDED WE DETERMINE THE HOSPITALIZATION OR PERFORMANCE OF THE PROCEDURE WAS MEDICALLY NECESSARY AND APPROPRIATE. IF WE DETERMINE THAT PERFORMANCE OF THE PROCEDURE OR THE HOSPITALIZATION WAS NOT MEDICALLY NECESSARY AND APPROPRIATE, WE WILL NOT MAKE ANY PAYMENT.

C. IF YOU OBTAIN A SECOND AND THIRD OPINION FOR PERFORMANCE OF A SURGICAL PROCEDURE OR HOSPITAL ADMISSION, AND THE OPINIONS DO NOT CONFIRM THE NEED FOR THE PROCEDURE OR HOSPITALIZATION AND YOU PROCEED WITH THE PROCEDURE OR HOSPITALIZATION, WE WILL NOT PAY FOR THE PROCEDURE OR HOSPITALIZATION NOR ANY ASSOCIATED PRACTITIONER (INCLUDING FACILITY) CHARGES.

YOU WILL BE RESPONSIBLE FOR PAYING TO THE PROVIDER THE AMOUNT OF ANY REDUCTION OF BENEFITS (IN ADDITION TO ANY OTHER PAYMENTS YOU ARE REQUIRED TO MAKE UNDER THIS POLICY).

Any reduction of benefits under this provision is subject to Your rights under the "Claims Appeal" section of the "Claims Procedure" provision of this Policy.

STEP 1—Request For Care Preapproval

If Your Practitioner recommends that You (a) be admitted, for any reason, as an Inpatient; or (b) undergo any of the Surgical procedures or receive other services or supplies listed below, You must first obtain Our authorization to Determine whether We agree that the hospitalization, procedures or other services and supplies are Medically Necessary and Appropriate.

Failure to notify Us of the procedures, services or supplies as provided in Step 2 below, will not affect Our payment if We Determine that notice was given to Us as soon as was reasonably possible.

In some instances, before We authorize a hospitalization or the performance of a surgical procedure listed, We may require a second and/or third opinion. See "Step 3" and "Step 4" below.

You're viewing an archived copy from the New Jersey State Library.

Our authorization is valid for 30 days. If the hospitalization, procedure, service or use of the supply does not occur as planned, You or Your Practitioner must contact Us to renew the authorization. If the authorization is not renewed, We will consider the hospitalization, procedure, service or supply as not authorized.

If You or Your Practitioner obtain Our authorization for one of the listed procedures, We, in consultation with Your Practitioner, will authorize the appropriate setting (Inpatient or Outpatient) for the proposed procedure. If We approve an Inpatient admission, You or Your Practitioner may proceed with the admission and Our Payment will not be affected. **IF WE DO NOT AUTHORIZE AN INPATIENT ADMISSION AND YOU PROCEED WITH THAT ADMISSION, ANY PAYMENT FOR FACILITY CHARGES WILL BE REDUCED BY 50%.**

PROCEDURES, SERVICES AND SUPPLIES REQUIRING PREAPPROVAL

SURGICAL PROCEDURES

Adenoidectomy
Arthroscopy
Bunionectomy
Carpal Tunnel Surgery
Cesarean Section
Cholecystectomy
Coronary Artery Angioplasty
Coronary Artery Bypass Graft
Esophagoscopy
Excision of Intervertebral Disk
Gastroduodenoscopy
Hip Replacement
Hysterectomy
Knee Replacement
Lower Back Surgery
Mastectomy
Meniscectomy
Myringotomy
Pacemaker Implantation
Prostatectomy
Rhinoplasty
Septectomy with Rhinoplasty
Tonsillectomy
Tubal Transection and/or Ligation
Tympanoplasty
Tympanotomy Tube

MEDICAL PROCEDURES

Lower Back Medical Care

DIAGNOSTIC PROCEDURES

Cardiac Catheterization
CAT SCAN
Cystoscopy
Magnetic Resonance Imaging

OTHER SERVICES AND SUPPLIES

Home Health Care
Skilled Nursing Care
Maternity Care (See STEP 2 (a))
Hospice Care
Infusion Therapy

STEP 2—Notice Requirements

If We are notified within the required time and We Determine that the procedures, services or supplies are Medically Necessary and Appropriate, Our Payment will not be affected. **IF WE ARE NOT NOTIFIED WITHIN THE TIME SPECIFIED, WE WILL REDUCE ANY PAYMENT BY 50%.**

(a) For **Non-Medical Emergency** hospitalizations, procedures, services or supplies listed above, You or Your Practitioner must **contact Us at least 3 days prior to admission, treatment or purchase** to obtain Our authorization. We will provide You or Your Practitioner with Our Determination within those 3 days. However, for **maternity care,** You or Your Practitioner must contact Us ***within the first 12 weeks of medical confirmation of a pregnancy. We will send You or Your Practitioner Our acknowledgement of the pregnancy within 7 days.***

(b) ***For*** **Medical Emergency** hospitalizations, procedures, services or supplies You or Your Practitioner must contact Us **within 48 hours or on the next business day (whichever is later),** from the commencement of hospitalization, treatment, or use of supplies, whichever is later, to obtain Our authorization. We will provide You or Your Practitioner with Our Determination within 48 hours.

(c) For **Continued Confinement** as an Inpatient beyond the time authorized, You or Your Provider must contact us **at least 1 full day, i.e. 24 hours, prior to the preapproved discharge date,** for additional authorization. We will provide You or Your Practitioner with Our Determination within those 24 hours.

In the event We are not able to provide You or Your Practitioner with a Determination within the time frames stated, We will tell You and Your Practitioner before the mid-point of the time stated, ***or the next business day, whichever is later,*** as well as put in writing to You, what specific information is needed to make that Determination. ***In the event We do not respond to You or Your Practitioner within these time frames, We will not apply the 50% reduction of benefits as allowed by this Utilization Review section to Covered Charges incurred between the time You or Your Practitioner notify Us and We respond to You.***

In the event We do not authorize the hospitalization, procedure, service or supplies, We will send You a written statement within 7 days, explaining the specific reasons for denial of the authorization. Any such denial of Our authorization is subject to Your rights under the "Claims Appeal" section of the "Claims Procedure" provision of this Policy.

Failure to notify Us of the procedures, services or supplies listed above will not affect Our payment if We Determine that notice was given to Us as soon as was reasonably possible.

STEP 3—Obtaining a Second Opinion

You may always obtain a second opinion when You are advised to have Surgery or be hospitalized. We may **require** that You obtain a second opinion if We Determine that it is necessary in order for Us to authorize a surgical procedure or hospital admission. If We Determine that a second opinion is necessary, We may arrange for the second opinion consultation. Regardless of whether the second opinion is at Our request or Yours, We will pay for the consultation and for any Diagnostic Services and Pre-Admission Testing necessary for the second opinion, subject to all Policy limitations and exclusions.

If the second opinion confirms the need for a surgical procedure, We, in consultation with Your Practitioner, will authorize the appropriate setting (Inpatient or Outpatient) for the proposed procedure. If We approve an Inpatient admission, You or Your Practitioner may proceed with the admission and Our payment will not be affected.

IF WE DO NOT AUTHORIZE AN INPATIENT ADMISSION FOR PERFORMANCE OF THE PROCEDURE AND YOU PROCEED WITH THAT ADMISSION, ANY PAYMENT FOR FACILITY CHARGES WILL BE REDUCED BY 50%.

IF YOU DO NOT OBTAIN A SECOND OPINION WHICH WE ASK YOU TO OBTAIN, OUR PAYMENT WILL BE REDUCED BY 20% PROVIDED WE DETERMINE THE HOSPITALIZATION OR PERFORMANCE OF THE SURGICAL PROCEDURE WAS MEDICALLY NECESSARY AND APPROPRIATE. IF WE DETERMINE THAT PERFORMANCE OF THE SURGICAL PROCEDURE OR THE HOSPITALIZATION WAS NOT MEDICALLY NECESSARY AND APPROPRIATE, WE WILL NOT MAKE ANY PAYMENT.

A confirming second opinion is valid for 90 days. If You do not undergo the surgical procedure or become hospitalized within that time, You or Your Practitioner must notify Us and renew the confirming opinion prior to the hospital admission or the procedure being performed. If the confirming opinion is not renewed, We may consider the confirming opinion not authorized.

If the second opinion does not confirm the need for the surgical procedure or hospital admission, You may obtain or We may require You obtain a third opinion.

STEP 4—Obtaining a Third Opinion

If you obtained a second opinion and it did not confirm the need for the surgical procedure or hospital admission, You may obtain or We may require You to obtain a third opinion. Regardless of whether the third opinion is at Our request or Yours, We will pay for the consultation and for any Diagnostic Services and Pre-Admission Testing necessary for the third opinion, subject to all Policy limitations and exclusions.

IF THE SECOND AND THIRD OPINIONS DO NOT CONFIRM THE NEED FOR THE SURGICAL PROCEDURE OR HOSPITAL AD-

You're viewing an archived copy from the New Jersey State Library.

MISSION AND YOU PROCEED WITH THE PROCEDURE OR HOSPITALIZATION, WE WILL NOT PAY FOR THE PROCEDURE OR HOSPITALIZATION NOR ANY ASSOCIATED PRACTITIONER (INCLUDING FACILITY) CHARGES.

IF YOU DO NOT OBTAIN A THIRD OPINION WHICH WE HAVE ASKED YOU TO OBTAIN, OUR PAYMENT FOR THE PROCEDURE OR HOSPITALIZATION WILL BE REDUCED BY 20% PROVIDED WE DETERMINE THE PERFORMANCE OF THE PROCEDURE OR THE HOSPITALIZATION WAS MEDICALLY NECESSARY AND APPROPRIATE. IF WE DETERMINE THAT PERFORMANCE OF THE PROCEDURE OR THE HOSPITALIZATION WAS NOT MEDICALLY NECESSARY AND APPROPRIATE, WE WILL NOT MAKE ANY PAYMENT.

A confirming third opinion is valid for 90 days. If you do not undergo the procedure or become hospitalized within that time, You or Your Practitioner must notify Us and renew the confirming opinion prior to the procedure being performed or the hospitalization. If the confirming opinion is not renewed, We may consider the confirming opinion not authorized.

. . .

XII. [XIV.] [XV.] GENERAL PROVISIONS

. . .

TERMINATION OF THE POLICY—RENEWAL PRIVILEGE

During or at End of Grace Period—Failure to Pay Premiums: If any Premium is not paid by the end of its grace period, the Policy will end when that period ends. **However,** You may write to Us, in advance, to ask that the Policy be terminated at the end of any period for which Premiums have been paid. Then the Policy will end on the date requested.

This Policy will be renewed automatically each year on the Anniversary Date, unless one of the following circumstances occur:

(a) nonpayment of Premiums;
(b) fraud or misrepresentation by You or Your Dependents;
(c) termination of Your eligibility or, with respect to Your Dependent, Your Dependent's Eligibility;
(d) You become eligible either for Medicare, Medicaid or to participate in a Group Health Benefits Plan which provides the same or similar coverage;
(e) **You became covered under another individual health benefits plan;**
(f) non-renewal as authorized by the Board.

Immediate cancellation will occur if You commit fraudulent acts or make misrepresentations with respect to coverage of You and Your Dependents.

. . .

EXHIBIT F

. . .

TABLE OF CONTENTS

Section		Page
. . .		
VII.	RIGHT TO RECOVERY—THIRD PARTY LIABILITY	
IX.	GENERAL PROVISIONS	
. . .		

II. ELIGIBILITY

TYPES OF COVERAGE

A Contractholder who completes an application for coverage may elect one of the types of coverage listed below:

(a) **SINGLE COVERAGE**—coverage under this Contract for the Contractholder only.
(b) **FAMILY COVERAGE**—coverage under this Contract for You and Your Dependent(s).
(c) **PARENT AND CHILD(REN) COVERAGE**—coverage under this Contract for You and all Your Child Dependents or coverage for multiple children residing within the same residence who share a common legal guardian, or for when there exists a valid support order requiring health benefit coverage whether or not there is an adult who will be provided coverage.
(d) **HUSBAND AND WIFE COVERAGE**—coverage under this Contract for You and Your Spouse.

WHO IS ELIGIBLE

(a) **THE CONTRACTHOLDER**—You, if Your Primary Residence is in the designated service area in the State of New Jersey, **You are not covered under another individual health benefits plan,** and You are not eligible for a Group Health Benefits Plan that provides the same or similar coverage, Medicare or Medicaid.
(b) **SPOUSE**—Your Spouse, **who is not covered under another individual health benefits plan, and** who is not eligible for Medicare, Medicaid or a Group Health Benefits Plan that provides same or similar coverage.
(c) **CHILD**—Your Child, **who is not covered under another individual health benefits plan,** who is not eligible for Medicare, Medicaid or a Group Health Benefits Plan that provides same or similar coverage, and who qualifies as a Dependent, as those terms are defined in the "Definition" section of this Contract.

NOTE: YOU AND/OR YOUR DEPENDENTS ARE ELIGIBLE FOR COVERAGE UNDER THIS POLICY IF THIS POLICY REPLACES ANOTHER INDIVIDUAL HEALTH BENEFITS PLAN UNDER WHICH YOU AND/OR YOUR DEPENDENTS ARE COVERED. *THE OTHER PLAN MUST BE TERMINATED NO LATER THAN 30 DAYS AFTER THE EFFECTIVE DATE OF THIS CONTRACT.* WE MAY REQUIRE PROOF THAT THE OTHER COVERAGE HAS BEEN TERMINATED.

. . .

IX. GENERAL PROVISIONS

. . .

TERMINATION OF THE POLICY—RENEWAL PRIVILEGE

During or at End of Grace Period—Failure to Pay Premiums: If any Premium is not paid by the end of its grace period, the Contract will end when that period ends. **However,** You may write to Us, in advance, to ask that the Contract be terminated at the end of any period for which Premiums have been paid. Then the Contract will end on the date requested.

This Contract will be renewed automatically each year on the Anniversary Date, unless one of the following circumstances occur:

(a) nonpayment of Premiums;
(b) fraud or misrepresentation by You or Your Dependents;
(c) termination of Your eligibility or, with respect to Your Dependent, Your Dependent's Eligibility;
(d) You become eligible either for Medicare, Medicaid or to participate in a Group Health Benefits Plan which provides the same or similar coverage;
(e) **You became covered under another individual health benefits plan;**
(f) non-renewal as authorized by the Board.

Immediate cancellation will occur if You commit fraudulent acts or make misrepresentations with respect to coverage of You and Your Dependents.

. . .

EXHIBIT G
APPLICATION FOR INDIVIDUAL HEALTH BENEFITS PLAN FOR INDIVIDUALS AND FAMILIES

Eligibility Requirements

1. Eligibility requirements are determined under the Individual Health Coverage Reform Act of 1992, P.L. 1992, c.161.
2. You must be a New Jersey resident.
3. You and any family members you wish to cover must not be eligible to be covered under:
   (a) a group health benefits plan that provides same or similar coverage for hospital and medical expenses;
   (b) Medicare; or
   (c) Medicaid (Recent changes in federal law may allow you to purchase an individual health benefits plan even if you are eligible for Medicaid. Ask about this when you apply for coverage.)
4. You and any family members you wish to cover are not eligible for a standard individual health benefits plan if covered by

You're viewing an archived copy from the New Jersey State Library.

another individual health benefits plan unless the other plan is being replaced by the plan being applied for with this application.

5. The effective date of your coverage shall be no later than the first of the month following the month in which the completed application *{was dated}* and premium payment *{is}* ***are*** received ***by us or our duly authorized agent***.

INDIVIDUAL APPLICATION INSTRUCTIONS

BEFORE COMPLETING THIS APPLICATION BE SURE TO FAMILIARIZE YOURSELF WITH THE BENEFIT OPTIONS AVAILABLE. [NOTE: [CARRIER'S] PARTICIPATING PROVIDERS, INCLUDING ALL [PARTICIPATING] [NETWORK] PRIMARY CARE PHYSICIANS, ARE INDEPENDENT CONTRACTORS AND ARE NOT AGENTS OR EMPLOYEES OF [CARRIER].]

COMPLETE ALL SECTIONS IF YOU ARE:

1. [Applying] [Enrolling] as a new [insured] [enrolled] [subscriber] [member].
2. Changing dependent coverage.

[COMPLETE SECTIONS 1, 2, 3, [AND] [5] AND [6] IF YOU ARE TERMINATING YOUR COVERAGE.

Section 1—Print your full name along with the name(s) of your spouse and dependent children you wish to cover, if any. Provide date of birth, sex, and social security number for each individual listed. Your social security number is for our use. The New Jersey Individual Health Coverage Program Board will not collect or use your social security number. If a dependent is a full-time college student, you **must** attach a current course schedule or tuition receipt. If a dependent is beyond age 19 or 23, as applicable, but is mentally or physically handicapped ***or developmentally disabled***, unmarried and chiefly dependent upon the application or applicant's spouse for support and maintenance, a physician's statement as to the dependent's physical or mental incapacity must be provided. The add/remove blocks should be checked **only** if you wish to add or remove a dependent from the plan.

Section 2—Complete all information.

Section 3—Check box(es) indicating options for coverage, type of contract, [payment plan] and reason(s) for submitting form (i.e., new enrollment, coverage change, name change, withdrawal).

Section 4—This information is required. Please complete all information.

[Section 5—For applicants only] From the appropriate [directory] [brochure] [ ] choose [the location number for] a Primary Care Physician [or Health Center] [and/or Gynecologist if applicable,] [for yourself and each member of your family] [required for all members]. [If you choose a Health Center, you must choose a Primary Care Physician who services that Health Center.] [Indicate whether you are choosing [carrier's] Statewide Physician Network or Health Center.] Check the change box only if you are changing providers.

Section [5/6]—Applicant **must sign** this section and date this form or it will not be processed.

Section [6/7]—Completion of this section is optional.

CONDITIONS OF ACCEPTANCE

On behalf of myself and the dependents listed [on the following page,] [on the reverse side,] I agree to or with the following:

1. Coverage of applicant and of the listed dependents shall depend on acceptance by (carrier) after a review of the application [and receipt of payment].
2. Applicant is applying for individual coverage for the applicant, applicant's spouse and any eligible unmarried children under nineteen (19) years of age, unmarried children who are mentally or physically *{incapacitated}* ***handicapped or developmentally disabled,*** and who are chiefly dependent upon the applicant or the applicant's spouse for support and maintenance, or are unmarried children between the ages of nineteen (19) and twenty-three (23) who are full-time students at an accredited educational institution.
3. Coverage and benefits are contingent on timely payment of premiums. Coverage may be terminated as provided in the Individual [Contract] [Policy].
4. The Individual [Contract] [Policy] will determine the rights and responsibilities of [insured(s)] [enrollee(s)] [subscriber(s)] [member(s)] and will govern in the event it conflicts with any benefits comparison, summary or other description of the health benefits plan.

[5. As a condition to benefits, applicant understands and agrees that (with the exception of a medical emergency as defined in the Individual [Contract] [Policy] all services, in order to be covered by (Carrier), must be performed either by a Primary Care Physician or by the specialist, hospital or other provider as authorized by prior written referral from the Primary Care Physician [or Care Manager].]

[6. [If applicable,] Applicant agrees to make payment directly to health care providers, such copayments as are provided for in the Individual [Contract] [Policy].]

[7. Applicant understands that this coverage will remain in effect regardless of the continued availability of a particular [Health Center], Primary Care Physician or other health care provider.]

[8. Applicant acknowledges that (Carrier's) participating providers, including all participating primary care physicians, are independent contractor and are not agents or employees of (Carrier).]

You're viewing an archived copy from the New Jersey State Library.

Please print in ink all information requested on this application.

1. Eligible Persons to be Enrolled (Note: Dependent children may be covered under their parent's contract only while unmarried and until they attain age [20] 19 or 23, if full-time students. Unmarried, handicapped dependent children can continue beyond the age limits above as long as they remain incapacitated and unmarried.)

This section must be completed in its entirety.

LAST NAME	FIRST NAME	MI	BIRTHDATE MO	DAY	YR	SEX (M or F)	Social Security Number
Applicant 1. ☐ Add ☐ Remove							__/__/__-__/__-__/__/__/__
Spouse 2. ☐ Add ☐ Remove							__/__/__-__/__-__/__/__/__
Child 3. ☐ Add ☐ Remove							__/__/__-__/__-__/__/__/__
Child 4. ☐ Add ☐ Remove							__/__/__-__/__-__/__/__/__
Child 5. ☐ Add ☐ Remove							__/__/__-__/__-__/__/__/__

*Attach sheet to list additional children. Attach proof if full-time student. Totally disabled dependent children will be covered regardless of age. Attach proof of disability.

DEPENDENT INFORMATION

Do any of the dependents listed in #1 live at another address? ☐ Yes ☐ No

If yes, who and at what address?

_____

Explain the circumstances.

_____

If any dependent's last name is different from yours, explain the circumstances.

_____

2. PRIMARY RESIDENCE (Note: You must reside in New Jersey for the majority of a calendar year with the intention of making New Jersey your home and not for temporary purposes.)

Street Apt. City State Zip

TELEPHONE NUMBER

Home ( ) - Work ( ) - Best place to call during day: ☐ Home ☐ Work

You're viewing an archived copy from the New Jersey State Library.

Are you a resident of the State of New Jersey? ☐ Yes ☐ No

Do you maintain a residence in any other state? ☐ Yes ☐ No

If "Yes", (a) Name of state _____
(b) How much time do you spend there each year? _____

3. COVERAGE (Please mark Coverage, Type of Contract and Type of Activity)

PLEASE ENROLL ME (AND MY FAMILY) IN: (Only one may be selected) [(For Plans B, C, D, and E select one deductible option.)]

[PLAN A	[☐ Indemnity]	[☐ Point of Service]	[☐ Preferred Provider]			
PLAN B	[☐ Indemnity]	[☐ Point of Service]	[☐ Preferred Provider]	Deductible $250 ____	$500 ____	$1000 ____
PLAN C	[☐ Indemnity]	[☐ Point of Service]	[☐ Preferred Provider]	Deductible $250 ____	$500 ____	$1000 ____
PLAN D	[☐ Indemnity]	[☐ Point of Service]	[☐ Preferred Provider]	Deductible $250 ____	$500 ____	$1000 ____
PLAN E	[☐ Indemnity]	[☐ Point of Service]	[☐ Preferred Provider]	Deductible $150 ____	$500 ____	$1000 ____]

[HMO Plan [$10] $15 [$20] copayment.]

Type of Contract: ☐ Single
☐ Family
☐ Parent & Child(ren)
☐ Husband/Wife

Type of Activity:

☐ New Subscriber

☐ Converting from existing (carrier) plan
ID # _____

☐ Add/Remove Dependent
Reason _____
Date of Event _____

☐ Name Change from _____ to _____

[☐ Change of Primary Care Physician or {GYN} Gynecologist]

[☐ Change of Health [Care] Center from _____ to _____]

[☐ Change of Primary Care Physician at Health [Care] Center]

☐ Withdrawal From Coverage
Date of Event _____

SELECT THE PAYMENT PLAN YOU DESIRE

☐ Monthly [☐ Quarterly] [☐ Semi-Annually]

[PAYMENT MODE:
☐ Check
☐ Money Order
☐ Credit Card Type _____ No. _____ Exp. Date _____
☐ Automatic Bank Draft (attach voided check)
☐ Other _____ Amount $ _____]

4. OTHER HEALTH CARE COVERAGE (Please note that) [Note: In some situations, if you are eligible for or have other health benefits coverage, you are not eligible for this [policy] [coverage]. If you or other family members become eligible for or become covered under other health benefits coverage, after the date of this application, you must notify us as soon as possible, however no later than the effective date of such other coverage.]

Are you employed?	☐ Yes	☐ No	If yes, please give name and address of your employer.
Are you eligible for other health benefits coverage? (i.e., coverage under your employer's health benefits coverage, Medicare or Medicaid)	☐ Yes	☐ No	

You're viewing an archived copy from the New Jersey State Library.

If yes, give name and policy no. of other carrier or type of coverage.
Are other family members eligible for coverage? If yes, specify.
Do you or other family members currently have any other health care coverage? ☐ Yes ☐ No
If yes, give name and policy/certificate no. of other carrier, initial effective date of coverage and specify those covered by the policy/certificate:
Are you replacing existing coverage? ☐ Yes ☐ No
If yes, give name and policy no. of other carrier, initial effective date of coverage, date of termination, and specify those covered by policy.
[Have you or your dependents ever been a member of [carrier]?]
[If yes, under what name and social security no.?]
[Where? [carrier] of:]

5. PROVIDER SELECTION

	FULL NAME OF PRIMARY CARE PHYSICIAN AND OFFICE ID NO.	HEALTH CENTER* (if applicable)	[GYNECOLOGIST OFFICE NO.]	ESTABLISHED PATIENT	PRIMARY CARE PHYSICIAN CHANGE	HEALTH CENTER CHANGE
1. Applicant				☐ Yes ☐ No	☐	☐
2. Spouse				☐ Yes ☐ No	☐	☐
3. Child				☐ Yes ☐ No	☐	☐
4. Child				☐ Yes ☐ No	☐	☐
5. Child				☐ Yes ☐ No	☐	☐

[Statewide Physician Network ☐ Health Center ☐]

*When selecting Health Center option, please also select a Primary Care Physician from among the Health Center doctors.

[5.][6.] AUTHORIZATION AND CERTIFICATION

I hereby apply to (carrier) for coverage for any eligible dependents listed above and myself.

I understand that for the 12 months following the effective date of this [policy] [contract], benefits are not provided for health care services received for (a) conditions for which medical advice, diagnosis, care or treatment was recommended or received during the last 6 months, (b) conditions for which during the last 6 months there were symptoms which would cause a prudent person to seek medical advice, diagnosis, care, or treatment, or (c) pregnancy existing on the effective date of this [policy] [contract]. (Note: This limitation may not apply if the eligible person transfers from another health benefits plan.)

[[Unless I request otherwise in writing,] I understand that by signing below when I file a claim, (carrier) may pay the health care benefits directly to the provider instead of to me.]

I agree that: (a) any physician, hospital or other provider is authorized to provide to (carrier or its assignee) information about any eligible person's medical history; and (b) any company or person having information concerning other health care coverage in force, or available to, any eligible person may give such information to (carrier or its assignee.)

I state that: (a) I am a resident of New Jersey [and reside within the (carrier) service area (if applicable)], (b) the information given on this application is complete to the best of my knowledge and belief and (c) that (carrier) will rely on this information to

You're viewing an archived copy from the New Jersey State Library.

determine eligibility. I understand that if I omit or falsify any statement in this application (carrier) can cancel this contract as of the original effective date.

Applicant's Signature: _____ Date Signed: _____

Spouse's Signature: _____ Date Signed: _____

Preparer's Signature: _____ DOI License # _____ Date Signed: _____

NOTE TO ALL APPLICANTS: If we accept your application, a copy of the application will be sent to you. Attach the copy to your {[certificate]} [contract] [policy]. It becomes part of your contract with us.

[6.] [7.] INCOME HOUSEHOLD

Completion of this section is optional. The information will be used for statistical purposes only, in a way that will not identify you personally. This information will not affect your application, acceptance or coverage.

☐ under {$10,000}-$19,999 ☐ $20-{$30,000}$29,999 ☐ $30-{$40,000}$39,999 ☐ $40-{$50,000}$49,999

☐ $50-{$60,000}$59,999 ☐ $60,000 and above

For [Carrier] [Plan] Use Only	[Effective Date]	[Billing]	[Coverage Code]	[Type]	[Pre-Ex]	[Continuous Coverage]	[Transcode]	[ ]

You're viewing an archived copy from the New Jersey State Library.

EXHIBIT Q

CERTIFICATION OF COMPLIANCE

Submit this form in triplicate to the IHC Board at the following address: 20 West State Street, CN-325, Trenton, New Jersey 08625. Affiliated Carriers must file separate forms.

1. INFORMATION ABOUT THE CARRIER AND RESPONDENT

Carrier Name: _____

NAIC#: _____

Respondent's Name: _____

Respondent's Title: _____

Respondent's Address: _____

_____

Respondent's Telephone _____ FAX: _____

2. Compliance

Check all appropriate responses.

____ (a) We are using the following forms which fully comply with the IHC Board's individual health benefits plan forms as set forth in the appropriate Exhibit of the Appendix to N.J.A.C. 11:20:

_____ Plan A / Exhibit A

_____ Plan B / Exhibit B

_____ Plan C / Exhibit C

_____ Plan D / Exhibit D

_____ Plan E / Exhibit E

_____ HMO Plan / Exhibit F

____ (b) Our application form complies with the IHC Board's form as set forth in Exhibit G in the Appendix to N.J.A.C. 11:20.

____ (c) We are using an alternative application form pursuant to N.J.A.C. 11:20-4.1(b) and three copies of said form are hereby being submitted to the IHC Board for approval.

3. PLAN OPTIONS

Complete each relevant section (please use "NA" to indicate when a section is not relevant). Attach additional pages as necessary.

(a) Plans A through E

(1) List all plans to be offered as traditional indemnity contracts, if any.

_____

_____

(2) List all plans to be offered in conjunction with a selective contracting arrangement (defined as N.J.A.C. 11:4-37), if any.

_____

_____

_____

(3) For all plans to be offered in conjunction with a selective contracting arrangement, specify the coinsurance differentials and whether the plan requires election of a primary care physician.

_____

_____

_____

_____

(4) Do the plans provide for direct payment to health care practitioners without assignment? (Note: this option is available only on health service corporation plans and other plans offered in conjunction with selective contracting arrangements.)

_____ Yes _____ No

(5) Do the plans include any of the following as set forth by the IHC Board?

i. Alternate Treatment Features

_____ Yes _____ No

ii. Centers of Excellence Features

_____ Yes _____ No

(b) HMO Plan

(1) Check the copayment options being offered.

☐ $10 (Optional)

☐ $15 (Standard)

☐ $20 (Optional)

(2) Is the in-network prescription drug coverage being offered?

☐ $15 Copayment

☐ *{5%}* ***50%*** Co-insurance

4. CERTIFICATION

I, the undersigned, certify that this completed form is true and accurate, and that I am an officer of the carrier duly authorized to submit this certification.

_____ _____

Date Signature

_____

Title

_____

(a)

NEW JERSEY SMALL EMPLOYER HEALTH BENEFITS PROGRAM BOARD

Small Employer Health Benefits Program Board Membership

Adopted Amendments: N.J.A.C. 11:21-2.1 and 2.5

Proposed: November 7, 1994 at 26 N.J.R. 4310(a).

Adopted: January 5, 1995 by the New Jersey Small Employer Health Benefits Program Board, Kevin O'Leary, Executive Director.

Filed: January 6, 1995 as R.1995 d.65, **without change.**

Authority: N.J.S.A. 17B:27A-17 et seq., as amended by N.J.S.A. 17B:27A-51, P.L.1994, c.11, and P.L.1994, c.97.

Effective Date: February 6, 1995.

Expiration Date: October 15, 1998.

Summary of Public Comments and Agency Responses:

No comments received. Following a public hearing on December 7, 1994 by the Department of Insurance, these amendments were approved by the Commissioner of Insurance on December 29, 1994.

Executive Order No. 27 Statement

An Executive Order No. 27 analysis is not required because the composition of the New Jersey Small Employer Health Benefits Board of Directors and Reimbursement to Board members are dictated by N.J.S.A. 17B:27A-17 et seq., as amended by P.L. 1994, c.97, and are not subject to any Federal requirements or standards.

Full text of the adoption follows:

SUBCHAPTER 2. NEW JERSEY SMALL EMPLOYER HEALTH BENEFITS PROGRAM PLAN OF OPERATION

11:21-2.1 Purpose and structure

(a)-(d) (No change.)

(e) The Board shall consist of 18 persons, including the Commissioners of Health and Insurance or their designees, both of whom shall serve as ex officio, and 10 public members who shall be elected by the members of the Program, subject to approval by the Commissioner, and six public members who shall be appointed by the Governor with the advice and consent of the Senate. Initially, three of the elected public members of the Board shall be elected for a

You're viewing an archived copy from the New Jersey State Library.

three-year term, three shall be elected for a two-year term, and three shall be elected for a one-year term. The tenth elected public member, added by P.L. 1994, c.97, shall be elected for a three-year term. Initially, of the six appointed public members added to the Board by P.L. 1994, c.97, two shall be appointed for a term of one year, two for a term of two years and two for a term of three years. Thereafter, all public members of the Board shall be elected or appointed for a term of three years. A vacancy in the membership of the Board shall be filled for an unexpired term in the manner provided for in the original election or appointment, as appropriate. No carrier shall have more than one representative on the Board.

(f) The following categories shall be represented among the elected public members:

1. Two carriers whose principal health insurance business is in the small employer market;

2. One carrier whose principal health insurance business is in the larger employer market;

3. A health, hospital or medical service corporation;

4. A health maintenance organization;

5. A risk-assuming carrier;

6. A reinsuring carrier; and

7. Three persons representing small employers, at least one of whom represents minority small employers.

(g) The following categories shall be represented among the appointed public members:

1. Two insurance producers licensed to sell health insurance pursuant to N.J.S.A. 17:22A-1 et seq.;

2. One representative of organized labor;

3. One physician licensed to practice medicine and surgery in this State; and

4. Two persons who represent the general public and are not employees of a health benefits plan provider.

11:21-2.5 Board structure and meetings

(a) The Program shall exercise its powers through a Board.

1. The Board shall be made up of the Commissioner, the Commissioner of Health, or their designees (who shall serve ex officio) and 16 public members. The composition of the Board shall be as described in N.J.S.A. 17B:27A-29 as amended by P.L. 1994, c.97. No person representing one of the public members shall serve, or continue to serve, on the Board unless such person represents one of the categories specified in N.J.S.A. 17B:27A-29 as amended by P.L. 1994, c.97.

2. Initially, three of the elected public members shall serve for a term of three years; three shall serve for a term of two years; and three shall serve for a term of one year. The tenth elected public member, added by P.L. 1994, c.97, shall be elected for a three-year term. Initially, of the six appointed public members added to the Board by P.L. 1994, c.97, two shall be appointed for a term of one year, two for a term of two years and two for a term of three years. Thereafter, all public members shall serve for a term of three years. A vacancy in the membership of the Board shall be filled for an unexpired term in the manner provided for in the original election or appointment, as appropriate. The public directors shall serve their terms of office until their replacements are duly elected or pursuant to the terms of their appointments as applicable.

i.-vi. (No change.)

3. (No change.)

(b) The votes of the Board shall be a one person, one vote basis. An elected public member, other than the three small employer representatives provided for in Section 13 of the Act (N.J.S.A. 17B:27A-29) as amended by P.L. 1994, c.97, and the Commissioners of Health and Insurance or their designees, may designate a voting alternate employed by the same carrier or same State agency, as appropriate. Appointed public members and the three small employer representatives, all of whom are appointed or elected as individuals, may not designate a voting alternate.

(c)-(i) (No change.)

(j) Directors shall not be compensated by the Program for their services but may be reimbursed for reasonable unreimbursed travel expenses incurred in attending Board and committee meetings pursuant to the State Travel Guidelines issued by the Department of the Treasury.

You're viewing an archived copy from the New Jersey State Library.

PUBLIC NOTICES

COMMUNITY AFFAIRS

(a)

DIVISION OF HOUSING AND COMMUNITY RESOURCES

Notice of Opportunity for Public Comment Homelessness Prevention Program Funding Allocation

Take notice that N.J.A.C. 5:12-2.2(b) requires that funds available to the Homelessness Prevention Program be distributed so that applicants in all regions of the State have equal access to assistance. This notice is being published to inform all interested persons how the Department intends to implement this requirement and to invite public comment. If, after review of any comments that are received, it is determined that the distribution formula needs modification, a subsequent notice indicating any revisions will be published.

The formula for distribution of Homelessness Prevention Program funds to assist renters in each county is intended to reflect the number of households in each county that have the greatest number of characteristics indicating possible eligibility for Program assistance. The Program has used two indicators: (1) the number of evictions filed in each county (as reported by the Administrative Office of the Courts) and, (2) the number of renter households paying greater than 50 percent of gross household income toward their rent (as determined from statistics of the U.S. Bureau of the Census.) The number of evictions is used because this figure represents the maximum number of households that could become homeless through the eviction process. The percentage of gross income spent on rent is used because Program experience indicates that households who are evicted and are paying greater than 50 percent of their gross income for rent are most at-risk of becoming homeless.

The Department calculated the number of households in each county that represents the maximum number of households which are **both** paying greater than 50 percent of income for rent **and** facing eviction. For example, in Atlantic County there were 5,499 evictions filed and 4,893 of those households were paying greater than 50 percent of gross household income for rent. Therefore 4,893 was the number chosen for that county because that number includes households that are evicted and paying greater than 50 percent of income for rent. The number 4,893 was then divided by the Statewide total of 144,477 to determine a 3.39 percent funding level for Atlantic County. The total of 144,477 represents the number of households Statewide that are evicted and paying greater than 50 percent of their gross income for rent.

Since this formula would lower the amount of assistance that has historically been provided to several counties experiencing the lowest eviction rates, the formula has been slightly adjusted to establish a minimum assistance level of $50,000.

Comments concerning the allocation methodology may be submitted in writing on or before March 8, 1995 to:

Homelessness Prevention Program
Division of Housing and Community Resources
New Jersey Department of Community Affairs
CN-811
Trenton, New Jersey 08625-0811

NEW JERSEY DEPARTMENT OF COMMUNITY AFFAIRS
DIVISION OF HOUSING AND COMMUNITY RESOURCES
HOMELESSNESS PREVENTION PROGRAM
STATISTICAL BASE FOR ALLOCATION OF FUNDS

County	Eviction Filings	Households with Rent 50% Income	#Eligible Households	Percent of Potential Households
ATLANTIC	5,449	4,893	4,893	3.39%
BERGEN	10,429	15,480	10,429	7.22
BURLINGTON	4,528	4,458	4,458	3.09
CAMDEN	10,104	10,161	10,104	6.98
CAPE MAY	772	2,034	772	0.53
CUMBERLAND	1,995	2,758	1,995	1.38
ESSEX	43,235	28,297	28,297	19.59
GLOUCESTER	2,354	2,774	2,354	1.63
HUDSON	23,225	24,081	23,225	16.08
HUNTERDON	364	1,045	364	0.25
MERCER	8,437	5,735	5,735	3.97
MIDDLESEX	12,380	11,078	11,078	7.67
MONMOUTH	8,672	9,295	8,672	6.00
MORRIS	3,009	4,539	3,009	2.08
OCEAN	3,810	6,703	3,810	2.64
PASSAIC	10,037	13,068	10,037	6.95
SALEM	686	1,274	686	0.47
SOMERSET	2,238	2,608	2,238	1.55
SUSSEX	616	1,405	616	0.43
UNION	10,740	10,960	10,740	7.43
WARREN	965	1,621	965	0.67
TOTALS	164,045	164,267	144,477	100.00

SOURCES:

Eviction filings: New Jersey Administrative Office of the Courts (July 1, 1992-June 30, 1993)

Number of all renter households paying greater than 50% of monthly income for rent: "The C.H.A.S. Datebook For NJ" U.S. Dept. Of Housing And Urban Development.

You're viewing an archived copy from the New Jersey State Library.

NEW JERSEY DEPARTMENT OF COMMUNITY AFFAIRS
DIVISION OF HOUSING AND COMMUNITY RESOURCES
HOMELESSNESS PREVENTION PROGRAM

County	Percent of Allocation
ATLANTIC	3.39%
BERGEN	7.22
BURLINGTON	3.09
CAMDEN	6.98
CAPE MAY	0.53
CUMBERLAND	1.38
ESSEX	19.59
GLOUCESTER	1.63
HUDSON	16.08
HUNTERDON	0.25
MERCER	3.97
MIDDLESEX	7.67
MONMOUTH	6.00
MORRIS	2.08
OCEAN	2.64
PASSAIC	6.95
SALEM	0.47
SOMERSET	1.55
SUSSEX	0.43
UNION	7.43
WARREN	0.67
TOTAL	100.00

ENVIRONMENTAL PROTECTION

(a)

DIVISION OF PARKS AND FORESTRY

Notice of Public Hearings
Proposed Exchange of Lands Located within the Delaware and Raritan Canal State Park between the State of New Jersey, Department of Environmental Protection and the Black River and Western Railroad Company

Take notice that the State of New Jersey, Department of Environmental Protection will hold **public hearings** to seek comments on the proposed exchange of land:

The lands to be exchanged are located within and adjacent to the Delaware and Raritan Canal State Park and are shown on the tax map of the City of Lambertville, County of Hunterdon.

The lands to be conveyed by the State consist of five acres of land in Block 1043, p.o. Lots 1 and 5 and 4500 square feet in Block 1022, Lot 3. The lands to be conveyed by the Railroad consist of 2.94 acres in Block 1043 p.o. Lots 1 and 5.

This land was acquired by the State in 1937 from the United Jersey Railroad and Canal Company.

The Department seeks to convey this property, which is adjacent to lands of the Black River and Western Railroad Company, to that company as part of a land exchange with the Railroad. This exchange will facilitate the construction of the Delaware and Raritan Canal Multi-Use Trail through the City of Lambertville to provide continuity of the trail between the City of Trenton and the Township of Alexandria.

The **public hearings** will be held on:

Wednesday, March 8, 1995 at 10 A.M.
at the Lambertville City Hall
18 York Street
in the Council Chambers/Courtroom
Lambertville, NJ
and
Thursday, March 23, 1995 at 1 P.M.
at the New Jersey Division of Parks and Forestry Office
501 E. State Street
4th Floor Washington Conference Room
Trenton, NJ

Persons wishing to make oral presentation are asked to limit their comments to a five minute time period. Presenters should bring a copy of their comments to the hearing for use by the Department. The hearing records will be kept open for a period of seven days following the date of the public hearing so that additional written comments can be received.

Interested persons may submit written comments until March 30, 1995

Gregory A. Marshall, Director
NJDEP/Division of Parks and Forestry
CN 404
Trenton, NJ 08625-0404

(b)

OFFICE OF LAND AND WATER PLANNING

Amendment to the Tri-County Water Quality Management Plan
Public Notice

Take notice that on December 23, 1994, pursuant to the provisions of the New Jersey Water Quality Planning Act, N.J.S.A. 58:11A-1 et seq., and the Statewide Water Quality Management Planning rules (N.J.A.C. 7:15-3.4), an amendment to the Tri-County Water Quality Management Plan was adopted by the Department of Environmental Protection (Department). The amendment modifies the Bordentown Sewerage Authority (Authority) Wastewater Management Plan (WMP) by expanding the sewer service area of the Authority's Black's Creek Wastewater Treatment Plant (WTP) to serve the area presently served by the Johnstone WTP. This area includes the National Guard Armory and State Police Barracks on Route 130, Yepsen Juvenile Medium Security Facility, and the Johnstone Training School site, all within the Township of Bordentown. The projected wastewater flow from these facilities has been limited to 0.08 million gallons per day (mgd), expanding the projected 20 year planning need of the Black's Creek WTP to 4.207 mgd. Upon completion of the connection to Black's Creek WTP, the Johnstone WTP will be abandoned. Any future development on these sites which lies within identified environmentally sensitive areas will be required to contact the Department regarding whether a federal Environmental Protection Agency (EPA) grant waiver or mapping revision approval is required. Future wastewater flows in excess of 0.08 mgd from the Johnstone Sewer Area will require a Water Quality Management Plan amendment.

This amendment proposal was noticed in the New Jersey Register on May 16, 1994 at 26 N.J.R. 2150(a). Comments on this amendment were received during the public comment period and are summarized below with the Department's responses.

COMMENT: The Bordentown Township Committee (Committee) notified the Department that they were opposed to the amendment. The basis for this opposition was uncertainty regarding the future use of the former Johnstone Center site by the State of New Jersey. The Committee expressed concerns that wastewater flow calculations from the Johnstone site could not be made until a future use was determined. Should a future use require in excess of 0.08 mgd, the available capacity of the Black's Creek WTP for taxable development and affordable housing commitments could be reduced.

RESPONSE: Since a future use of the Johnstone site was not identified as part of this amendment, the Department shared the Committee's concerns regarding projected flow calculations from this site and the ability of the Black's Creek WTP, a Federally funded wastewater facility, to treat wastewater in excess of 0.08 mgd without usurping any of the funded capacity. The Department suggested limiting the wastewater flows from the property site to the flow identified in the amendment which was 0.08 mgd, the existing Johnstone WTP permitted limit. Both the Committee and the Authority had no objections to the amendment if wastewater flows from the Johnstone Sewer Area were limited to 0.08 mgd. Therefore, the amendment was modified to specifically limit future flows from the Johnstone Sewer Area to 0.08 mgd. Flow projections in excess of 0.08 mgd will require a Water Quality Management Plan amendment.

COMMENT: The Committee noted that portions of the proposed Johnstone Sewer Area lie within a critical [environmentally sensitive] area. The Committee felt that the amendment did not address the critical area issue and the applicant should provide additional information to define the extent of wetlands and/or floodplains to determine to what extent this property can be developed, prior to calculation of projected flows and determination of future site usage.

You're viewing an archived copy from the New Jersey State Library.

RESPONSE: The amendment did not include site specific mapping of wetlands or floodplains since the future use of portions of the amendment site, for example, the closed Johnstone Center buildings and vacant lands, had not been determined. However, the amendment does address this issue by identifying on the modified WMP mapping that future development in areas identified as "wetlands" must be reviewed by the Department's Municipal Wastewater Assistance Element (MWAE) so that determinations can be made regarding whether a Federal EPA grant waiver or mapping revision approval will be required. Once a site specific development proposal is made for the Johnstone Center site, it must go through not only the local approval process, but must qualify for an EPA grant waiver or mapping revision (if wetlands are affected) and must obtain all required Department permits. Further, the limitation of wastewater flows from the amendment site (identified in response to Comment 1 above) will assure compliance with federally restricted development in wetlands areas for a Federal grant funded wastewater facility.

COMMENT: The Committee expressed concern that development within [areas shown as] wetlands [on the WMP mapping] could impact the grant given to the Authority for expansion of the Black's Creek WTP. In addition, development within the present sewered area is dependent upon existing plant capacity and inclusion of the flows proposed or projected in the area, which is the subject of the amendment, would reduce development potential prior to expansion of the WTP as approved in the amended 1992 WMP.

RESPONSE: If it can be shown by on-site investigation that wetlands do not actually exist on areas which are identified on the mapping as "environmentally sensitive" but are within the future sewer service area of a specified sewage treatment plant (STP), these lands can be sewered without jeopardizing a funded STP by obtaining a mapping revision from EPA through the Department's MWAE. This type of change would allow a very small amount of additional wastewater to be treated by the funded facility but should not jeopardize the STP's funded capacity.

However, in the case of the Johnstone Sewer Area amendment, none of the wastewater flow from these sites was included within the original constraints analysis prepared for the Black's Creek WTP. Therefore, it is correct to assume that inclusion of wastewater flows from the amendment area will use existing WTP capacity thus reducing development potential within the remaining Black's Creek WTP service area until a WTP expansion to the projected planning flow need of 4.207 mgd is undertaken. In order to minimize this impact, while providing an opportunity to correct an inadequately operating wastewater treatment plant (the Johnstone WTP), the Committee and the Authority agreed to limit the wastewater flows from this site to 0.08 mgd. Future development(s) in the Johnstone Sewer Area which require wastewater flows in excess of 0.08 mgd will require a Water Quality Management Plan amendment and a review of the Black's Creek WTP capacity.

COMMENT: The Committee noted that they were not able to comment on the error correction and omissions in the 1986 201 Plan service area mapping referenced in the amendment application as "the errors and omissions proposed to be corrected were not set forth in the Township's copy of the application."

RESPONSE: The errors and omissions referred to in the amendment application were those perceived errors and omissions to the 1986 201 Facilities Plan which the Bordentown Sewerage Authority adddressed in the Bordentown Sewerage Authority WMP which was adopted in 1992. No additional modifications concerning the 1986 201 Facilities Plan have been made to the WMP as part of the Johnstone Center amendment.

This amendment represents only one part of the permit process and other issues will be addressed prior to final permit issuance. Additional issues which were not reviewed in conjunction with this amendment but which may need to be addressed may include, but are not limited to, the following: antidegradation; effluent limitations; water quality analysis; exact locations and designs of future treatment works (pump stations, interceptors, sewers, outfalls, wastewater treatment plants); and development in wetlands, flood prone areas, designated Wild and Scenic River areas, or other environmentally sensitive areas which are subject to regulation under Federal or State statutes or rules.

(a)

OFFICE OF LAND AND WATER PLANNING

Amendment to the Mercer County Water Quality Management Plan

Public Notice

Take notice that the New Jersey Department of Environmental Protection (NJDEP) is seeking public comment on a proposed amendment to the Mercer County Water Quality Management (WQM) Plan. This amendment proposal was submitted on behalf of Hamilton Township. This amendment would adopt a Wastewater Management Plan (WMP) for Hamilton Township, Mercer County. The WMP delineates the proposed sewer service area of the Hamilton Township Water Pollution Control Facility (WPCF) within Hamilton, Washington, and West Windsor Townships. Among the changes proposed are abandonment of the New Jersey Turnpike Authority Richard Stockton Service Area Sewage Treatment Plant (STP) with flows conveyed to the Hamilton WPCF and extension of Hamilton WPCF sewer service to the "Suburban Homes" (Drialo Subdivision) east of the Turnpike. Sewer service is not proposed to R120/40 and R120/80 zones within Hamilton Township as well as some additional areas. The portion of Hamilton Township to be served by the City of Trenton STP is identified. Also, identified are numerous existing NJPDES permitted facilities including industrial and remedial clean-up discharges. The total projected wastewater flow to the Hamilton WPCF is 13.538 million gallons per day (mgd). The projected wastewater flow to the City of Trenton STP from Hamilton Township is 0.036 mgd. Projected flows to the other various facilities are also identified. This WMP would amend the Washington Township WMP.

This amendment represents only one part of the permit process and other issues will be addressed prior to final permit issuance. Additional issues which were not reviewed in conjunction with this amendment but which may need to be addressed may include, but are not limited to, the following: antidegradation, effluent limitations, water quality analysis; exact locations and designs of future treatment works (pump stations, interceptors, sewers, outfalls, wastewater treatment plants); and development in wetlands, flood prone areas, designated Wild and Scenic River areas, or other environmentally sensitive areas which are subject to regulation under Federal or State statutes or rules.

This notice is being given to inform the public that a plan amendment has been proposed for the Mercer County WQM Plan. All information related to the WQM Plan, and the proposed amendment is located at the Mercer County Planning Division, McDade Administration Building, Room 412, 640 South Broad Street, P.O. Box 8068, Trenton, New Jersey 08650; and the NJDEP, Office of Land and Water Planning, 401 East State Street, CN-423, Trenton, New Jersey 08625. It is available for inspection between 8:30 A.M. and 4:00 P.M., Monday through Friday. An appointment to inspect the documents may be arranged by calling either the Mercer County Planning Division at (609) 989-6545 or the Office of Land and Water Planning at (609) 633-1179.

The Mercer County Planning Board will hold **a public hearing** on the proposed WQM Plan amendment. The public hearing will be on Wednesday, March 8, 1995 at 8:30 A.M., in Room 211 of the McDade Administration Building. **Interested persons** may submit written comments on the proposed amendment to the Secretary, Mercer County Planning Board at the address cited above; and to Dr. Daniel J. Van Abs, Office of Land and Water Planning, at the NJDEP address cited above. All comments must be submitted within 15 days following the public hearing. All comments submitted by interested persons in response to this notice, within the time limit, shall be considered by the County Planning Board and the County Executive with respect to this amendment request. In addition, if the amendment is adopted by Mercer County, the NJDEP must review the amendment prior to final adoption. The comments received in reply to this notice and to the public hearing will also be considered by the NJDEP during its review. Mercer County and the NJDEP thereafter may approve and adopt this amendment without further notice.

You're viewing an archived copy from the New Jersey State Library.

HEALTH

(a)

DIVISION OF HEALTH FACILITIES EVALUATION AND LICENSING

Notice of Examination Fee for Licensing Nursing Home Administrators

Take notice that the examination fee charged to each applicant for nursing home administrator licensure commencing with the April 13, 1995 examination will be $135.00. This represents an increase from the $125.00 fee charged for the October, 1994, examination and is a result of a national increase in fees charged by the NAB and the PES. This notice is being given in accordance with N.J.A.C. 8:34-9.1(b) which requires that the "Department shall provide timely notice of the examination fee in the Public Notice section of the New Jersey Register."

In order to be licensed as a nursing home administrator in New Jersey, a candidate must take the National Association of Boards of Examiners (NAB) examination. The Department administers the examination, which is purchased from NAB and the Professional Examination Service (PES). The cost of the examination is determined by the NAB. There is a per candidate examination fee.

HUMAN SERVICES

(b)

DIVISION OF YOUTH AND FAMILY SERVICES

Notice of Availability of Grant Funds Child Protection Substance Abuse Initiative

Take notice that, in compliance with N.J.S.A. 52:14-34.4, 34.5 and 34.6, the Department of Human Services announces the following availability of funds:

Name of grant program: Child Protection Substance Abuse Initiative.

Purpose for which the grant program funds shall be used: This program is intended to provide case management support services to the Division of Youth and Family Services (DYFS) in assessing addictions and making appropriate referrals of clients to substance abuse treatment providers in order to reduce the risk of child abuse/neglect by the substance abusing parent(s) and to reduce the numbers of children of such parents entering foster care. Assistance to DYFS would include, but not be limited to: provision of addictive illness case management support services to DYFS caseworkers in assessing drug and alcohol addictions and appropriately referring and linking clients who present with such addictions to addictions treatment facilities/modalities; compliance with DHS/DYFS contract policies and procedures; monitoring and maintaining program levels of service; monitoring referral activity; keeping accurate records to demonstrate the capability for effective fiscal and program management.

Amount of money in the grant program: The Division of Youth and Family Services (DYFS) will make available an initial **nine-month** award of a total of $273,000 in National Center on Child Abuse and Neglect (NCCAN) funds for this program. Based upon information provided by the National Center on Child Abuse and Neglect, second year funding in the amount of $518,000 will be made available to support the program.

Applicants who are seeking to provide services to less than all four catchments are limited to a ceiling of $68,250 per catchment for the first nine-month period. There is no match requirement. Funds awarded to selected applicants shall be continuous for a second full year of funding upon renegotiations of future contracts, if providers demonstrate positive addictive illness case management support services outcomes and compliance with DYFS contract requirements. Total funding shall not exceed $273,000 in the first nine months to be distributed to assist four DYFS field office city catchment areas, as follows: Asbury Park, Camden, Newark, Paterson.

Organizations that may be eligible to apply for funding under this program: Public or private agencies who submit proposals that are complete and fulfill the requirements of the Request For Proposals (RFPs) will be eligible for selection. Agencies who are licensed or eligible for licensure and that have staff who are certified or eligible for certification in addictions treatment are strongly preferred.

Qualifications needed by an applicant to be considered for funding: In all cases, applicants must demonstrate compliance with the following provisions:

(1) The applicant must demonstrate a comprehensive understanding of the purpose and intent of the Child Protection Substance Abuse Initiative's philosophy and treatment modality;

(2) The applicant must be willing to enter into a contract with DYFS and be willing to comply with DYFS policies and with the contracting rules and regulations of the Department of Human Services;

(3) The applicant must be willing to adhere specifically to the addictive illness case management support services requirements contained in the RFP and comply with DYFS monitoring and evaluation procedures;

(4) The applicant must not discriminate in providing services to DYFS staff and/or clients based on age, race, creed, national origin, sex, handicap or financial status; and

(5) The applicant must be willing to adhere specifically to reporting requirements, as specified in the RFP.

Application selection criteria: Applications for funds shall be evaluated and scored in accordance with the criteria listed below. The maximum score for all proposals shall equal 100 points and shall be computed based on the following:

- Applicants must demonstrate overall capability to provide addictive illness case management services to one or more DYFS offices simultaneously or upon request, including: ability to provide the services of certified addictions counselors to the Division of Youth and Family Services in the context of the provision of child protective services investigations and family assessments; knowledge and successful history of working with families where addiction is a problem, particularly knowledge and expertise in **diagnosing** addictive illness and **linking** parents/caregivers with appropriate treatment; experience and/or capability to provide addictive illness **identification assessment,** and **referral** services, particularly services to caretakers at risk of abusing or neglecting children (maximum of 10 points);
- Applicants must demonstrate comprehension and understanding of purpose and intent of the Child Protection Substance Abuse Initiative's philosophy and treatment modalities, including: demonstration of comprehension of the Division's need for assistance via the provision of addiction services for the caregivers of children under DYFS supervision; stating the principle and subordinate objectives of their project; providing supporting documentation testimonies from concerned interests other than the applicant; and, identifying the precise geographic location and area to be served by the project. This funding is to be used for **identification, assessment and referral** of DYFS clients in need of substance abuse services (maximum of 10 points);
- Applicants must demonstrate clarity, originality and attainability of applicant's proposed addictive illness case management support services, an implementation plan and assurance of compliance with contract requirements. This plan and assurance should include outlining a sound and workable plan of action pertaining to the scope of the project, detailing how the proposed work will be accomplished, including a feasible time table to implement the proposed services, citing factors that might accelerate or decelerate the work, giving acceptable reasons for taking this approach as opposed to others; describing and supporting any unusual features of the program, such as design or technological innovations; and discussing the type of data that will be collected and presented to demonstrate the success of the project; demonstrating how the required supervision of the CACs will be provided, as well as access to an ASAM physician and recruitment and supervision of home visitors (maximum of 20 points);
- Applicants must demonstrate level of staff experience in identifying and diagnosing substance abuse in general and with respect to substance abusing caregivers in particular who are at risk of abusing and neglecting a child. This must be indicated in the vitae of existing key staff or staff to be hired with funding through the RFP (maximum of 20 points);
- Applicants must describe their current or proposed relationship with DYFS and demonstrate a capacity to work with the agency. Applicants must demonstrate their ability to provide access to the full spectrum of addictive illness treatment modalities by virtue of their status as a licensed or licensed-eligible treatment provider with proof of relevant accreditation or, through demonstration of their relationship and access to other licensed addictions illness treatment providers (maximum of 10 points);
- Applicants must demonstrate a commitment of **existing** resources to which DYFS clients can be referred for **treatment.** This may include

You're viewing an archived copy from the New Jersey State Library.

examples such as priority of admission to in-patient or out-patient programs operated or affiliated with the applicant (maximum 10 points);

- Applicants must demonstrate the reasonableness of their budget plan, including: the results and benefits expected; the extent to which the application is consistent with the goals and objectives of the RFP; the extent to which the proposed project costs are reasonable in view of the expected results; the specific level of service (LOS) to be provided; in-kind contributions, commitment of existing resources and cash contributions also will be assessed (maximum 10 points);
- Applicants must demonstrate capability to provide services to bilingual/bicultural clients, African-Americans or clients who are members of other minority communities who are recognized by the Federal government (maximum 5 points);
- Applicants must describe receptiveness to DYFS monitoring, evaluation of addictive illness case management support services implementation and preparation of required Federal reports on project activities (maximum of 5 points).

Procedures for eligible applicants to apply: Applicants may obtain a copy of the Request for Proposals from the Division of Youth and Family Services, CN 717, Trenton, New Jersey 08625 or by calling Mary Bonard at (609) 984-0298. A mandatory bidders' conference is scheduled for:

Date: Tuesday, February 21, 1995
Time: 10:00 A.M.
Location: 3131 Princeton Pike
Lawrenceville, New Jersey

Agencies interested in applying for funds may also obtain a copy of the Request for Proposals at the bidders' conference.

Address to which applications must be submitted: Agencies interested in applying for these funds should submit one signed original and 10 copies of the Request for Proposals and all required attachments comprising the proposal application package to the Division of Youth and Family Services by 5:00 P.M. on March 17, 1995.

Proposals may be hand-delivered to:

Division of Youth and Family Services
Office of Program Operations
Capital Center
7th Floor
50 East State Street—7th Floor
Trenton, New Jersey 08625
Attention: Mary Bonard

Proposals may be mailed to:

Division of Youth and Family Services
Office of Program Operations
CN 717
Trenton, New Jersey 08625
Attention: Mary Bonard

Deadline by which applications must be submitted: The completed application and all supporting materials and copies must be received by 5:00 P.M. on March 17, 1995, at the Division of Youth and Family Services. Applications may be mailed or hand-delivered. No late applications will be considered for funding, regardless of postmark.

Date by which applicants shall be notified of acceptance: April 14, 1995.

(a)

NEW JERSEY DEVELOPMENTAL DISABILITIES COUNCIL

Notice of Availability of Grant Funds Employment Incentive Grant

Name of program: 1995 Employment Incentive Grant.

Purpose: This is a grant to encourage generic employment services to reach out to people with disabilities and help them reach their employment goals. The grant is intended to be used to augment the agency's ability to recruit, test and place people with disabilities who want good jobs.

Amount of available funding for the program: One $10,000 grant.

Qualifications: All employment agencies in New Jersey are eligible to apply.

Procedure for eligible persons to apply: Interested applicants may request an application package by writing on their letterhead:

Employment Incentive Grant
c/o Rachel A. Hickson
NJ Developmental Disabilities Council
CN 700
Trenton, NJ 08625-0700

Address to which applications must be submitted: Same as above.

Deadline by which applications must be received: By close of business, Monday, March 20, 1995.

Date the applicant is to be notified of acceptance or rejection: April 10, 1995. Grant funds are available for six months beginning no sooner than April 10, 1995.

(b)

OFFICE OF EDUCATION

Notice of Availability of State Funds State Facilities Education Act, (Chapter 207, Laws of 1979)

Take notice that, in compliance with N.J.S.A. 52:14-34.4, 34.5 and 34.6, the Department of Human Services, Office of Education hereby announces the availability of the following State funds:

Name of program: Educational Related Services for Fiscal Year 1996.

Purpose: To provide the delivery of physical, occupational, speech/language therapy and rehabilitative engineering services in state-operated/Office of Education facilities located throughout New Jersey. These facilities provide special education programs to children with disabilities, ages three through 21.

Amount of money in the program: Approximately $4,000,000.

Organizations which may apply for funding under the program: Individuals, agencies, hospitals, clinics, and any other interested third-party providers.

Qualifications needed by an applicant to be considered for funding: Physical therapists must be licensed and school certified. Speech/language Pathologists must be licensed, school certified and have the Certificate of Clinical Competence (CCC); candidates who are in their Clinical Fellowship Year (CFY) may be considered. Occupational therapists must be certified by the American Occupational Therapy Certification Board, Inc., school certified and be licensed as mandated by the New Jersey Occupational Therapy Licensing Board. The rehabilitation engineer must possess a minimum of a Bachelor's degree in human factors, electrical, mechanical and/or biomedical engineering. All therapists must carry malpractice insurance. All therapists must undergo a criminal history record check.

Procedure for eligible organizations to apply: All interested applicants should write to the address listed below or call 609-588-3164 for a Request for Proposal (RFP) package.

Address to which application must be submitted:

John W. Lewis, Acting Director
Department of Human Services
Office of Education
CN 710
Trenton, NJ 08625

Deadline by which applications must be submitted: April 5, 1995.

Date by which applicant shall be notified of approval or disapproval: May 22, 1995.

Appeal: A request for an appeal must be made within 15 days after notification of awards to John W. Lewis at the above address, in accordance with N.J.A.C. 10:3.

You're viewing an archived copy from the New Jersey State Library.

CORRECTIONS

(a)

THE COMMISSIONER

Notice of Receipt of Petition for Rulemaking N.J.A.C. 10A

Petitioner: Larry J. Pyatt, New Jersey State Prison.

Take notice that on January 5, 1995, the Department of Corrections received a petition for rulemaking.

The petitioner requests that a new rule be promulgated that would require the Department of Corrections to establish a unit for incarcerated veterans.

In accordance with the provisions of N.J.S.A. 52:14B-4(f) and N.J.S.A. 1:30-3.6, the Department shall subsequently mail to the petitioner, and file with the Office of Administrative Law, a notice of action on the petition.

INSURANCE

(b)

THE COMMISSIONER

Notice of the Imposition of a Surcharge for Recoupment of the Property-Liability Insurance Guaranty Association Assessment

Take notice that pursuant to N.J.S.A. 17:30A-16 and N.J.A.C. 11:1-6 the Commissioner of Insurance issued Order No. A94-224 on December 29, 1994 which provides that every member insurer of the New Jersey Property-Liability Insurance Guaranty Association (Association) which has paid an assessment to the Association due December 1, 1994 pursuant to N.J.S.A. 17:30A-8a(3) may impose a surcharge in the amount of one third of one percent of the net direct written premiums for all kinds of insurance written by the member insurer, except life insurance, accident and health insurance, workers' compensation insurance, title insurance, annuities, surety bonds, credit insurance, mortgage guaranty insurance, municipal bond coverage, fidelity insurance, investment return assurance, ocean marine insurance, and pet health insurance. The surcharge may be applied to policies which are issued or renewed on or after January 1, 1995. No member insurer may impose a surcharge on premiums of any policy to recoup assessments paid pursuant to N.J.S.A. 17:30A-8a(9) in accordance with N.J.S.A. 17:30A-16b. Copies of the Order were mailed to all member insurers of the Association.

You're viewing an archived copy from the New Jersey State Library.

REGISTER INDEX OF RULE PROPOSALS AND ADOPTIONS

The research supplement to the New Jersey Administrative Code

A CUMULATIVE LISTING OF CURRENT PROPOSALS AND ADOPTIONS

The **Register Index of Rule Proposals and Adoptions** is a complete listing of all active rule proposals (with the exception of rule changes proposed in this Register) and all new rules and amendments promulgated since the most recent update to the Administrative Code. Rule proposals in this issue will be entered in the Index of the next issue of the Register. **Adoptions promulgated in this Register have already been noted in the Index by the addition of the Document Number and Adoption Notice N.J.R. Citation next to the appropriate proposal listing.**

Generally, the key to locating a particular rule change is to find, under the appropriate Administrative Code Title, the N.J.A.C. citation of the rule you are researching. If you do not know the exact citation, scan the column of rule descriptions for the subject of your research. To be sure that you have found all of the changes, either proposed or adopted, to a given rule, scan the citations above and below that rule to find any related entries.

At the bottom of the index listing for each Administrative Code Title is the Transmittal number and date of the latest looseleaf update to that Title. Updates are issued monthly and include the previous month's adoptions, which are subsequently deleted from the Index. To be certain that you have a copy of all recent promulgations not yet issued in a Code update, retain each Register beginning with the December 5, 1994 issue.

If you need to retain a copy of all currently proposed rules, you must save the last 12 months of Registers. A proposal may be adopted up to one year after its initial publication in the Register. Failure to adopt a proposed rule on a timely basis requires the proposing agency to resubmit the proposal and to comply with the notice and opportunity-to-be-heard requirements of the Administrative Procedure Act (N.J.S.A. 52:14B-1 et seq.), as implemented by the Rules for Agency Rulemaking (N.J.A.C. 1:30) of the Office of Administrative Law. If an agency allows a proposed rule to lapse, "Expired" will be inserted to the right of the Proposal Notice N.J.R. Citation in the next Register following expiration. Subsequently, the entire proposal entry will be deleted from the Index. See: N.J.A.C. 1:30-4.2(c).

Terms and abbreviations used in this Index:

N.J.A.C. Citation. The New Jersey Administrative Code numerical designation for each proposed or adopted rule entry.

Proposal Notice (N.J.R. Citation). The New Jersey Register page number and item identification for the publication notice and text of a proposed amendment or new rule.

Document Number. The Registry number for each adopted amendment or new rule on file at the Office of Administrative Law, designating the year of promulgation of the rule and its chronological ranking in the Registry. As an example, R.1995 d.1 means the first rule filed for 1995.

Adoption Notice (N.J.R. Citation). The New Jersey Register page number and item identification for the publication notice and text of an adopted amendment or new rule.

Transmittal. A series number and supplement date certifying the currency of rules found in each Title of the New Jersey Administrative Code: Rule adoptions published in the Register after the Transmittal date indicated do not yet appear in the loose-leaf volumes of the Code.

N.J.R. Citation Locator. An issue-by-issue listing of first and last pages of the previous 12 months of Registers. Use the locator to find the issue of publication of a rule proposal or adoption.

MOST RECENT UPDATE TO THE ADMINISTRATIVE CODE: SUPPLEMENT NOVEMBER 21, 1994

NEXT UPDATE: SUPPLEMENT DECEMBER 19, 1994

Note: If no changes have occurred in a Title during the previous month, no update will be issued for that Title.

You're viewing an archived copy from the New Jersey State Library.

N.J.R. CITATION LOCATOR

If the N.J.R. citation is between:	Then the rule proposal or adoption appears in this issue of the Register	If the N.J.R. citation is between:	Then the rule proposal or adoption appears in this issue of the Register
26 N.J.R. 281 and 520	January 18, 1994	26 N.J.R. 3103 and 3230	August 1, 1994
26 N.J.R. 521 and 878	February 7, 1994	26 N.J.R. 3231 and 3504	August 15, 1994
26 N.J.R. 879 and 1178	February 22, 1994	26 N.J.R. 3505 and 3780	September 6, 1994
26 N.J.R. 1179 and 1272	March 7, 1994	26 N.J.R. 3781 and 3916	September 19, 1994
26 N.J.R. 1273 and 1416	March 21, 1994	26 N.J.R. 3917 and 4120	October 3, 1994
26 N.J.R. 1417 and 1554	April 4, 1994	26 N.J.R. 4121 and 4244	October 17, 1994
26 N.J.R. 1555 and 1738	April 18, 1994	26 N.J.R. 4245 and 4470	November 7, 1994
26 N.J.R. 1739 and 1904	May 2, 1994	26 N.J.R. 4471 and 4720	November 21, 1994
26 N.J.R. 1905 and 2166	May 16, 1994	26 N.J.R. 4721 and 4856	December 5, 1994
26 N.J.R. 2167 and 2510	June 6, 1994	26 N.J.R. 4857 and 5138	December 19, 1994
26 N.J.R. 2511 and 2692	June 20, 1994	27 N.J.R. 1 and 262	January 3, 1995
26 N.J.R. 2693 and 2828	July 5, 1994	27 N.J.R. 263 and 410	January 17, 1995
26 N.J.R. 2829 and 3102	July 18, 1994	27 N.J.R. 411 and 606	February 6, 1995

N.J.A.C. CITATION		PROPOSAL NOTICE (N.J.R. CITATION)	DOCUMENT NUMBER	ADOPTION NOTICE (N.J.R. CITATION)
ADMINISTRATIVE LAW—TITLE 1				
1:6A	Special Education Program	17 N.J.R. 4(a)		
1:7A	Department of Environmental Protection cases	26 N.J.R. 4124(a)		
1:7A-1.1, 8.1	Department of Environmental Protection Cases: public hearing and extension of comment period	26 N.J.R. 4863(a)		
1:14-10	BRC ratemaking hearings: discovery	26 N.J.R. 3(a)		
1:14-10	BRC ratemaking hearings: extension of comment period regarding discovery process	26 N.J.R. 883(a)		
Most recent update to Title 1: TRANSMITTAL 1994-5 (supplement September 19, 1994)				
AGRICULTURE—TITLE 2				
2:5	Quarantines and embargoes on animals	26 N.J.R. 1908(b)		
2:6	Animal health: biological products for diagnostic or therapeutic purposes	26 N.J.R. 3784(a)	R.1995 d.83	27 N.J.R. 481(a)
2:24	Diseases of bees	27 N.J.R. 5(a)		
2:33	Agricultural fairs	26 N.J.R. 285(a)		
2:34	Equine Advisory Board rules	26 N.J.R. 3919(a)	R.1995 d.7	27 N.J.R. 89(a)
2:76-3.3, 3.5, 3.6, 3.9, 3.10, 3.12	Creation of farmland preservation programs	27 N.J.R. 8(a)		
2:76-4.3, 4.5, 4.6, 4.9, 4.11	Creation of municipally approved farmland preservation programs	27 N.J.R. 10(a)		
2:76-6.2, 6.5, 6.6, 6.7, 6.9–6.18B	Acquisition of development easements	27 N.J.R. 13(a)		
Most recent update to Title 2: TRANSMITTAL 1994-6 (supplement September 19, 1994)				
BANKING—TITLE 3				
3:1-6.6	Department examination charges	26 N.J.R. 1560(b)		
3:1-6.7	Failure to pay license fees and examination charges	27 N.J.R. 20(b)		
3:3-2, 3	Department of Banking organization: nonpublic records; grievance procedure pursuant to ADA	27 N.J.R. 20(a)		
3:4-3	Banking institutions: sale of alternative investments	25 N.J.R. 5733(a)	Expired	
3:18-1.1, 1.3, 3.2, 7.4, 8.1, 8.2, 12	Secondary Mortgage Loan Act rules	26 N.J.R. 3920(a)	R.1995 d.14	27 N.J.R. 89(b)
3:18-10.5	Failure to pay license fees and examination charges	27 N.J.R. 20(b)		
3:23-2.1	Check cashing businesses	26 N.J.R. 4863(b)		
3:24	Check cashing businesses	26 N.J.R. 4863(b)		
3:38-1.1, 1.10, 5.3	Net worth of mortgage lenders	26 N.J.R. 4124(b)	R.1994 d.629	26 N.J.R. 4999(a)
3:38-1.6	Failure to pay license fees and examination charges	27 N.J.R. 20(b)		
3:38-5.3	Mortgage referrals by real estate agents	26 N.J.R. 6(a)		
3:38-5.3	Mortgage referrals by real estate agents: extension of comment period	26 N.J.R. 884(a)		
3:40-1.9	New Jersey Cemetery Board: organizational meetings	26 N.J.R. 4475(a)		
3:41-12	Cemetery Board: service contractors and service contracts	26 N.J.R. 6(b)		
Most recent update to Title 3: TRANSMITTAL 1994-7 (supplement November 21, 1994)				
CIVIL SERVICE—TITLE 4				
Most recent update to Title 4: TRANSMITTAL 1992-1 (supplement September 21, 1992)				

You're viewing an archived copy from the New Jersey State Library.

N.J.A.C. CITATION		PROPOSAL NOTICE (N.J.R. CITATION)	DOCUMENT NUMBER	ADOPTION NOTICE (N.J.R. CITATION)
PERSONNEL—TITLE 4A				
4A:1-2.3	Department use of Social Security numbers	26 N.J.R. 287(a)		
4A:2-2.3	Sexual harassment	26 N.J.R. 3507(a)	R.1994 d.618	26 N.J.R. 5000(a)
4A:2-3.1	Department use of Social Security numbers	26 N.J.R. 287(a)		
4A:2-3.1	Performance evaluations	26 N.J.R. 3509(a)		
4A:3-3.1	Department use of Social Security numbers	26 N.J.R. 287(a)		
4A:3-4.6	Voluntary furlough program	26 N.J.R. 4126(a)	R.1995 d.12	27 N.J.R. 145(a)
4A:4-1.10	Personnel action freezes	26 N.J.R. 3510(a)	R.1994 d.619	26 N.J.R. 5002(a)
4A:4-2.1	Department use of Social Security numbers	26 N.J.R. 287(a)		
4A:4-2.15, 5.2	Voluntary furlough program	26 N.J.R. 4126(a)	R.1995 d.12	27 N.J.R. 145(a)
4A:6-1.1, 1.3, 1.6, 1.8, 1.10, 1.21, 1.21B, App.	Family and medical leave	26 N.J.R. 3511(a)	R.1994 d.620	26 N.J.R. 5002(b)
4A:6-1.2, 1.3, 1.5, 1.23, 2.4	Voluntary furlough program	26 N.J.R. 4126(a)	R.1995 d.12	27 N.J.R. 145(a)
4A:6-4.2	Department use of Social Security numbers	26 N.J.R. 287(a)		
4A:6-5.3	Performance evaluations	26 N.J.R. 3509(a)		
4A:7-1.3, 3.3, 3.4	Sexual harassment	26 N.J.R. 3507(a)	R.1994 d.618	26 N.J.R. 5000(a)
4A:8	Layoffs	26 N.J.R. 3518(a)	R.1995 d.55	27 N.J.R. 482(a)
4A:8-2.4	Voluntary furlough program	26 N.J.R. 4126(a)	R.1995 d.12	27 N.J.R. 145(a)
4A:8-2.4	Family and medical leave	26 N.J.R. 3511(a)	R.1994 d.620	26 N.J.R. 5002(b)
Most recent update to Title 4A: TRANSMITTAL 1994-6 (supplement October 17, 1994)				
COMMUNITY AFFAIRS—TITLE 5				
5:1	Standards of conduct for officers and employees of the Department	26 N.J.R. 4866(a)		
5:12	Homelessness Prevention Program	26 N.J.R. 4248(a)	R.1995 d.56	27 N.J.R. 483(a)
5:16	Local Housing Authority and Municipal Redevelopment Agency Training Program	26 N.J.R. 4867(a)		
5:18	Uniform Fire Code	26 N.J.R. 4258(a)		
5:18-1.5, 2.7, 2.8, 2.22, 3.3, 3.4, 3.5, 4.9, 4.13	Uniform Fire Code requirements	26 N.J.R. 4249(a)		
5:18-2.4A	Uniform Fire Code: overnight camps life hazard use category	26 N.J.R. 4254(a)		
5:18-2.11A	Construction boards of appeal: UCC and Fire Code appeals	26 N.J.R. 4254(b)		
5:18-2.12, 2.21, App. 3-A	Uniform Fire Code: cigarette lighters	26 N.J.R. 2182(b)		
5:18A	Fire Code Enforcement	26 N.J.R. 4258(a)		
5:18B	High Level Alarms	26 N.J.R. 4258(a)		
5:18C	Standards for Fire Service Training and Certification	26 N.J.R. 4258(a)		
5:18C-2.4	Fire service training facilities	26 N.J.R. 4249(a)		
5:23-2.9, 2.34–2.37, 4.40	Construction boards of appeal: UCC and Fire Code appeals	26 N.J.R. 4254(b)		
5:23-3.4, 3.18	Uniform Construction Code: energy subcode	26 N.J.R. 4872(a)		
5:23-3.14, 7	Uniform Construction Code: Barrier Free Subcode	26 N.J.R. 2698(a)		
5:23-3.14, 7	Barrier Free Subcode: correction of public hearing date	26 N.J.R. 3524(a)		
5:23-3.15	Uniform Construction Code: abandonment of septic systems	26 N.J.R. 4874(a)		
5:23-3.20	Uniform Construction Code: mechanical subcode	26 N.J.R. 4874(b)		
5:23-4.3	Uniform Construction Code: administrative changes regarding municipal enforcing agencies	_____	_____	26 N.J.R. 5007(a)
5:23-8.11	Asbestos safety control monitor: administrative correction	_____	_____	26 N.J.R. 4760(a)
5:23-9.4	Uniform Construction Code: seismic zones	26 N.J.R. 4875(a)		
5:23-10.1, 10.3, 10.4	Radon Hazard Subcode: schools and residential buildings in tier one areas	26 N.J.R. 2704(a)	R.1994 d.609	26 N.J.R. 5007(b)
5:23-12.6	Uniform Construction Code: administrative correction regarding test and inspection fees	27 N.J.R. 321(a)		
5:25-2.5	New home warranties and builder registration: denial of registration	26 N.J.R. 1913(a)	R.1994 d.610	26 N.J.R. 5010(a)
5:26-8.2	Planned real estate developments: community association meeting location	26 N.J.R. 4277(a)	R.1995 d.17	27 N.J.R. 91(b)
5:31	Local authorities	26 N.J.R. 4128(a)	R.1995 d.27	27 N.J.R. 91(a)
5:34-7.6, 7.8, 7.9	Local government finance: renewal of registration of Cooperative Purchasing System	26 N.J.R. 4724(a)		
5:52	Volunteer Coaches' Safety Orientation and Training Skills Programs	27 N.J.R. 21(a)		
5:80	New Jersey Housing and Mortgage Finance Agency rules	27 N.J.R. 265(a)		
5:80-5.10	Housing and Mortgage Finance Agency: prepayment of project mortgage	26 N.J.R. 1187(a)	R.1995 d.20	27 N.J.R. 321(b)

You're viewing an archived copy from the New Jersey State Library.

N.J.A.C. CITATION		PROPOSAL NOTICE (N.J.R. CITATION)	DOCUMENT NUMBER	ADOPTION NOTICE (N.J.R. CITATION)
5:93-3.6, 5.6	New Jersey Council on Affordable Housing: reductions for substantial compliance; zoning for inclusionary development	26 N.J.R. 2514(a)	R.1994 d.563	26 N.J.R. 4349(a)

Most recent update to Title 5: TRANSMITTAL 1994-10 (supplement November 21, 1994)

MILITARY AND VETERANS' AFFAIRS—TITLE 5A

Most recent update to Title 5A: TRANSMITTAL 1994-1 (supplement June 20, 1994)

EDUCATION—TITLE 6

6:7	State-operated school districts	26 N.J.R. 3524(b)	R.1994 d.616	26 N.J.R. 5010(b)

Most recent update to Title 6: TRANSMITTAL 1994-8 (supplement October 17, 1994)

ENVIRONMENTAL PROTECTION—TITLE 7

7:0	Management of waste oil: request for public comment	26 N.J.R. 1466(a)		
7:1C-1.5	Payment schedule for permit application fees	26 N.J.R. 3922(a)		
7:1H	County Environmental Health Act rules: pre-proposal	26 N.J.R. 3526(a)		
7:1H	County Environmental Health Act rules: postponement of new rules proposal	27 N.J.R. 22(a)		
7:1L	Payment schedule for permit application fees	26 N.J.R. 3922(a)		
7:2-17.1, 17.4	Berth and launch ramp use fees at State marinas: administrative change	27 N.J.R. 92(a)		
7:5C	Endangered Plant Species Program	26 N.J.R. 3790(a)	R.1995 d.45	27 N.J.R. 322(a)
7:5D	State Trails System	26 N.J.R. 1459(a)		
7:7A-16.1	Payment schedule for permit application fees	26 N.J.R. 3922(a)		
7:9	NJPDES permitting program: proposal summary and request for public comment	26 N.J.R. 3927(a)		
7:9B	NJPDES permitting program: proposal summary and request for public comment	26 N.J.R. 3927(a)		
7:10-15.1	Payment schedule for permit application fees	26 N.J.R. 3922(a)		
7:11-2.2, 2.3, 2.4, 2.10, 2.12	Delaware and Raritan Canal-Spruce Run/Round Valley Reservoirs System: sale of water	26 N.J.R. 4907(a)		
7:11-4.3, 4.4, 4.9, 4.13	Manasquan Reservoir Water Supply System: sale of water	26 N.J.R. 4910(a)		
7:12-1.2, 2.1, 3.2, 4.1, 4.2, 9.1	Shellfish growing water classifications	26 N.J.R. 4475(b)	R.1995 d.81	27 N.J.R. 484(a)
7:13	Flood hazard area control	26 N.J.R. 1009(a)		
7:13-7.1	Flood plain redelineation of Pascack and Fieldstone brooks in Montvale	26 N.J.R. 2834(a)	R.1995 d.46	27 N.J.R. 324(a)
7:14	NJPDES permitting program: proposal summary and request for public comment	26 N.J.R. 3927(a)		
7:14-8.1, 8.3, 8.4, 8.15	Water supply allocation	26 N.J.R. 4912(a)		
7:14A	New Jersey Pollutant Discharge Elimination System	26 N.J.R. 1332(a)		
7:14A	NJPDES permitting program: proposal summary and request for public comment	26 N.J.R. 3927(a)		
7:14A-1.8	Payment schedule for permit application fees	26 N.J.R. 3922(a)		
7:14B-3.9	Payment schedule for permit application fees	26 N.J.R. 3922(a)		
7:15	Statewide Water Quality Management Planning Rules: public meetings and opportunity for comment on draft amendments	26 N.J.R. 792(a)		
7:15	NJPDES permitting program: proposal summary and request for public comment	26 N.J.R. 3927(a)		
7:19	Water supply allocation	26 N.J.R. 4912(a)		
7:19-3.8	Payment schedule for permit application fees	26 N.J.R. 3922(a)		
7:19A	Water supply allocation	26 N.J.R. 4912(a)		
7:19B	Water supply allocation	26 N.J.R. 4912(a)		
7:22A	Sewage Infrastructure Improvement Act grants	26 N.J.R. 3793(a)	R.1995 d.47	27 N.J.R. 324(b)
7:24A	Dam Restoration and Inland Waters Projects Loan Program	26 N.J.R. 2228(a)		
7:25-4	Implementation of Wild Bird Act of 1991	26 N.J.R. 1040(a)	R.1995 d.48	27 N.J.R. 329(a)
7:25-6.9	1995-96 Fish Code: administrative correction	26 N.J.R. 3258(a)		
7:25-18.1, 18.4, 18.5, 18.13–18.15	Marine fisheries management: winter flounder, bluefish, weakfish, Atlantic sturgeon, American lobster	26 N.J.R. 4277(b)	R.1995 d.82	27 N.J.R. 487(a)
7:25-18.1, 18.5	Directed conch fishery	26 N.J.R. 1931(a)	R.1994 d.615	26 N.J.R. 5011(a)
7:25-24.7, 24.9	Leasing of Atlantic coast bottom for aquaculture	26 N.J.R. 3109(a)		
7:26-1.4	Hazardous waste transportation: informal meeting on draft "10-day in-transit holding rule"	26 N.J.R. 294(a)		
7:26-3A.1, 4.1, 4A.1	Payment schedule for permit application fees	26 N.J.R. 3922(a)		
7:26A-2.1	Payment schedule for permit application fees	26 N.J.R. 3922(a)		
7:26B-1.10	Payment schedule for permit application fees	26 N.J.R. 3922(a)		
7:27-1, 8, 18, 22	Air Operating Permits and Reconstruction Permits: public roundtable on proposed new rules and amendments	26 N.J.R. 793(a)		
7:27-8.11	Payment schedule for permit application fees	26 N.J.R. 3922(a)		

You're viewing an archived copy from the New Jersey State Library

N.J.A.C. CITATION		PROPOSAL NOTICE (N.J.R. CITATION)	DOCUMENT NUMBER	ADOPTION NOTICE (N.J.R. CITATION)
7:27-15	Motor vehicle enhanced inspection and maintenance program	26 N.J.R. 3258(b)		
7:27-16.1, 16.4, 16.8, 16.9, 16.10, 16.17, 16.18	Control and prohibition of air pollution by volatile organic compounds	26 N.J.R. 4478(a)		
7:27-16.3, 16.7, 16.13, 16.17, 16.18	Control and prohibition of air pollution by volatile organic compounds: administrative corrections	_____	_____	26 N.J.R. 4793(a)
7:27-19	Control and prohibition of air pollution from oxides of nitrogen	26 N.J.R. 3298(a)		
7:27-22.1, 22.31	Air Quality Regulation Program: facility operating permit fees	27 N.J.R. 22(b)		
7:27-25.1, 25.3	Oxygenated fuels program	26 N.J.R. 1148(a)		
7:27-25.3	Oxygen program exemptions	26 N.J.R. 3835(a)		
7:27-26	Low Emission Vehicles Program	26 N.J.R. 1467(a)		
7:27-26	Low Emission Vehicles Program: extension of comment period	26 N.J.R. 4482(a)		
7:27A	Air pollution control: civil administrative penalties	26 N.J.R. 3566(a)	R.1995 d.5	27 N.J.R. 93(a)
7:27A	Air administrative procedures and penalties: administrative correction	27 N.J.R. 498(a)		
7:27A-3.10	Control and prohibition of mercury emissions	26 N.J.R. 1050(a)		
7:27A-3.10	Motor vehicle enhanced inspection and maintenance program	26 N.J.R. 3258(b)		
7:27A-3.10	Control and prohibition of air pollution from oxides of nitrogen	26 N.J.R. 3298(a)		
7:27B-4	Motor vehicle enhanced inspection and maintenance program	26 N.J.R. 3258(b)		
7:28	Radiation protection	26 N.J.R. 4942(a)		
7:28-3.12	Ionizing radiation-producing machines: application and annual registration renewal fees	26 N.J.R. 3797(a)	R.1995 d.49	27 N.J.R. 336(a)
7:28-48	Non-ionizing radiation producing sources: registration fees	25 N.J.R. 5422(a)	R.1995 d.6	27 N.J.R. 99(a)
7:28-48	Non-ionizing radiation producing sources: extension of comment period regarding registration fees	26 N.J.R. 793(b)		
7:28-48.7	Registration fees for non-ionizing radiation producing sources: administrative correction	27 N.J.R. 498(b)		
7:30-1.1	Payment schedule for permit application fees	26 N.J.R. 3922(a)		
7:31-1.1	Payment schedule for permit application fees	26 N.J.R. 3922(a)		
7:50-2, 3, 4, 5, 6, 7	Pinelands Comprehensive Management Plan	26 N.J.R. 165(a)	R.1994 d.590	26 N.J.R. 4795(a)
7:60-1.2, 1.3, 1.4, 1.6	Assessment of generators for cost of siting and developing low-level radiactive waste disposal facility	26 N.J.R. 4946(a)		

Most recent update to Title 7: TRANSMITTAL 1994-11 (supplement November 21, 1994)

HEALTH—TITLE 8

8:1-1	Disability discrimination grievance procedure	26 N.J.R. 2005(a)		
8:7-1.11–1.18	Licensure of persons for public health positions	27 N.J.R. 267(a)		
8:8-8.3, 8.5, 8.8	Collection of human blood	26 N.J.R. 3141(b)	R.1995 d.25	27 N.J.R. 343(a)
8:20	Birth Defects Registry	27 N.J.R. 269(a)		
8:23	Veterinary public health	26 N.J.R. 4129(a)	R.1995 d.24	27 N.J.R. 343(b)
8:23A	Veterinary public health	26 N.J.R. 4129(a)	R.1995 d.24	27 N.J.R. 343(b)
8:31	Health facilities construction plan review fee	26 N.J.R. 4135(a)	R.1995 d.38	27 N.J.R. 351(a)
8:31B-3.3, 3.70	Health care financing: monitoring and reporting	26 N.J.R. 12(a)		
8:31B-4.37	Charity care audit functions	26 N.J.R. 13(a)		
8:33I	Megavoltage radiation oncology services: certificate of need	26 N.J.R. 4875(b)		
8:39-2.2, 2.12	Long-term care facilities: application for licensure; add-a-bed	26 N.J.R. 4641(a)		
8:43E	Health care facilities: enforcement of licensure standards	26 N.J.R. 4527(a)		
8:43F	Adult day health care facilities: standards for licensure	26 N.J.R. 4532(a)		
8:43G	Hospital licensing standards	26 N.J.R. 4537(a)		
8:44-2.5	Clinical laboratory Proficiency Testing Program	26 N.J.R. 1070(a)		
8:44-2.11	Clinical laboratories: reopening of comment period on reporting of blood lead levels	26 N.J.R. 1190(a)		
8:45	Clinical laboratory services	27 N.J.R. 32(a)		
8:57-4	Immunization of children attending schools and preschool facilities	27 N.J.R. 270(a)		
8:57-5	Confinement of persons with tuberculosis	26 N.J.R. 3236(a)		
8:57-5	Confinement of persons with tuberculosis: public hearing	26 N.J.R. 3574(a)		
8:57-6	Hepatitis Inoculation Fund	27 N.J.R. 28(a)		
8:59-App. A, B	Worker and Community Right to Know Hazardous Substance List	26 N.J.R. 540(a)		
8:60	Asbestos licenses and permits	27 N.J.R. 71(a)		
8:62	Certification of lead abatement workers, supervisors, inspectors, project designers	26 N.J.R. 3575(a)		

You're viewing an archived copy from the New Jersey State Library.

N.J.A.C. CITATION		PROPOSAL NOTICE (N.J.R. CITATION)	DOCUMENT NUMBER	ADOPTION NOTICE (N.J.R. CITATION)
8:66	Repeal (see 8:66A)	27 N.J.R. 274(a)		
8:66A	Intoxicated Driving Program	27 N.J.R. 274(a)		
8:71	List of Interchangeable Drug Products (see 26 N.J.R. 1348(a), 2096(a))	26 N.J.R. 13(b)	R.1994 d.456	26 N.J.R. 3716(a)
8:71	List of Interchangeable Drug Products	26 N.J.R. 14(a)	R.1994 d.244	26 N.J.R. 2039(a)
8:71	List of Interchangeable Drug Products	26 N.J.R. 69(a)	R.1994 d.243	26 N.J.R. 2028(a)
8:71	Interchangeable drug products (see 26 N.J.R. 2025(b), 2901(a), 3715(b), 4387(a))	26 N.J.R. 1190(b)	R.1995 d.31	27 N.J.R. 355(a)
8:71	Interchangeable drug products (see 26 N.J.R. 2897(a), 3719(a), 4388(a))	26 N.J.R. 1821(a)	R.1995 d.33	27 N.J.R. 357(a)
8:71	Interchangeable drug products (see 26 N.J.R. 2898(a), 3717(b), 4388(b))	26 N.J.R. 1822(a)	R.1995 d.32	27 N.J.R. 355(b)
8:71	Interchangeable drug products (see 26 N.J.R. 3720(a), 4386(a))	26 N.J.R. 2723(a)	R.1995 d.35	27 N.J.R. 359(a)
8:71	Interchangeable drug products (see 26 N.J.R. 4390(a))	26 N.J.R. 3583(a)	R.1995 d.34	27 N.J.R. 357(b)
8:71	Interchangeable drug products	26 N.J.R. 4288(a)	R.1995 d.39	27 N.J.R. 351(b)
8:71	Interchangeable drug products	26 N.J.R. 4293(a)	R.1995 d.30	27 N.J.R. 354(a)
8:71	Interchangeable drug products	26 N.J.R. 4294(a)	R.1995 d.29	27 N.J.R. 351(c)
8:71	Interchangeable drug products	27 N.J.R. 30(a)		

Most recent update to Title 8: TRANSMITTAL 1994-9 (supplement November 21, 1994)

HIGHER EDUCATION—TITLE 9

9:4-1.7	Curriculum coordinating committee	26 N.J.R. 1751(a)		
9:9-7.1, 7.2, 7.3	Eligibility criteria for NJCLASS loans	26 N.J.R. 3242(a)	R.1994 d.617	26 N.J.R. 5012(a)
9:11-1.2, 1.7, 1.8, 1.19, 1.20, 1.22, 1.23	Educational Opportunity Fund Program	26 N.J.R. 3586(a)	R.1994 d.596	26 N.J.R. 4760(b)
9:12-1.1, 1.4, 1.6–1.9, 1.16–1.21, 1.23, 2.5, 2.7, 2.8, 2.10	Educational Opportunity Fund Program	26 N.J.R. 3586(a)	R.1994 d.596	26 N.J.R. 4760(b)
9:17	Recodification (see 9A:14)	26 N.J.R. 4878(a)		
9:18	Recodification (see 9A:15)	26 N.J.R. 4879(a)		
9A:14	Implementation of Higher Education Equipment Leasing Fund Act	26 N.J.R. 4878(a)		
9A:15	Implementation of Higher Education Facilities Trust Fund Act	26 N.J.R. 4879(a)		

Most recent update to Title 9: TRANSMITTAL 1994-5 (supplement September 19, 1994)

HUMAN SERVICES—TITLE 10

10:11	Department instructional staff: tenure status	26 N.J.R. 4297(a)	R.1995 d.86	27 N.J.R. 499(a)
10:15	Child Care Services Manual	26 N.J.R. 3327(a)	R.1994 d.628	26 N.J.R. 5012(b)
10:15A	Child Care Services Manual	26 N.J.R. 3327(a)	R.1994 d.628	26 N.J.R. 5012(b)
10:15B	Child Care Services Manual	26 N.J.R. 3327(a)	R.1994 d.628	26 N.J.R. 5012(b)
10:15C	Child Care Services Manual	26 N.J.R. 3327(a)	R.1994 d.628	26 N.J.R. 5012(b)
10:17	Child placement rights	26 N.J.R. 1563(a)		
10:37-5.28–5.34	Repeal (see 10:37E)	26 N.J.R. 3608(a)		
10:37-5.46–5.51	Repeal (see 10:37F)	26 N.J.R. 4547(a)		
10:37E	Division of Mental Health and Hospitals: outpatient service standards	26 N.J.R. 3608(a)		
10:37F	Adult Partial Care Services for individuals with severe and persistent mental illness	26 N.J.R. 4547(a)		
10:43	Division of Developmental Disabilities: determination of need for guardian	26 N.J.R. 2838(a)	R.1994 d.611	26 N.J.R. 5020(a)
10:43	Division of Developmental Disabilities: extension of comment period concerning determination of need for guardian	26 N.J.R. 3341(a)		
10:46A	Family Support Service System	26 N.J.R. 3341(b)	R.1995 d.1	27 N.J.R. 147(a)
10:46A	Family Support Service System: administrative correction and extension of comment period	26 N.J.R. 3610(a)		
10:46B	Division of Developmental Disabilities: placement of eligible persons	26 N.J.R. 3611(a)	R.1995 d.44	27 N.J.R. 360(a)
10:46B-5.1	Division of Developmental Disabilities: administrative correction regarding placement appeals	27 N.J.R. 499(b)		
10:48-4	Eligibility for services	26 N.J.R. 1752(a)		
10:48-4	Division of Developmental Disabilities: public hearing and reopening of comment period regarding management of waiting lists for services	26 N.J.R. 2756(a)		
10:49-5.2, 5.3, 5.4	Medicaid reimbursement for infertility-related services	26 N.J.R. 3345(a)	R.1994 d.600	26 N.J.R. 4762(a)
10:49-14.4	Medical assistance recoveries involving county welfare agencies	26 N.J.R. 3348(a)		
10:50-2.2	Transportation services for Medicaid recipients: provider reimbursement	26 N.J.R. 3929(a)	R.1994 d.622	26 N.J.R. 5020(b)

You're viewing an archived copy from the New Jersey State Library.

N.J.A.C. CITATION		PROPOSAL NOTICE (N.J.R. CITATION)	DOCUMENT NUMBER	ADOPTION NOTICE (N.J.R. CITATION)
10:51-1.6, 1.23, 2.6, 2.21, 4.6, 4.22, App. E	Medicaid and Pharmaceutical Assistance to the Aged and Disabled programs: EMC billing	26 N.J.R. 4136(a)		
10:51-1.12	Medicaid reimbursement for infertility-related services	26 N.J.R. 3345(a)	R.1994 d.600	26 N.J.R. 4762(a)
10:51-1.12, 2.11, 4.13	Medicaid and PAAD programs: unit-dose-packaged drugs	26 N.J.R. 3349(a)		
10:52	Manual for Hospital Services	26 N.J.R. 4551(a)		
10:52-1.3, 1.7, 1.8	Medicaid reimbursement for infertility-related services	26 N.J.R. 3345(a)	R.1994 d.600	26 N.J.R. 4762(a)
10:52-5.1, 5.3, 5.4, 5.6, 5.9, 5.12–5.15, 5.17, 5.18, 5.20, 6.13, 7.2, 9.1	Manual of Hospital Services: inpatient reimbursement methodology	27 N.J.R. 34(a)		
10:52-8.2	Manual of Hospital Services: disproportionate share adjustment for Other Uncompensated Care component	26 N.J.R. 2239(a)	R.1995 d.13	27 N.J.R. 152(a)
10:53-1.6, 1.7	Medicaid reimbursement for infertility-related services	26 N.J.R. 3345(a)	R.1994 d.600	26 N.J.R. 4762(a)
10:54-1.2	Medicaid reimbursement for infertility-related services	26 N.J.R. 3345(a)	R.1994 d.600	26 N.J.R. 4762(a)
10:55	Medicaid program: Prosthetic and Orthotic Services Manual	26 N.J.R. 4979(a)		
10:58-1.3	Medicaid reimbursement for infertility-related services	26 N.J.R. 3345(a)	R.1994 d.600	26 N.J.R. 4762(a)
10:59-1.9	Medical Supplier Manual: reimbursement for certain services	26 N.J.R. 2839(a)		
10:60-1.1, 1.2, 1.4, 1.13, 4.2	Home Care Services: EPSDT private duty nursing services	27 N.J.R. 279(a)		
10:60-1.3	Home Care Services: accreditation of private duty nursing agencies	26 N.J.R. 2840(a)	R.1994 d.623	26 N.J.R. 5021(a)
10:61-1.3, 3.2	Medicaid reimbursement for infertility-related services	26 N.J.R. 3345(a)	R.1994 d.600	26 N.J.R. 4762(a)
10:63	Long-Term Care Services	26 N.J.R. 3614(a)	R.1994 d.624	27 N.J.R. 156(a)
10:63-3, 4	Long-Term Care Services: nursing facility reimbursement	27 N.J.R. 281(a)		
10:64-1.3	Hearing Aid Services: optional audiological examinations	27 N.J.R. 287(a)		
10:66-2.3	Medicaid reimbursement for infertility-related services	26 N.J.R. 3345(a)	R.1994. d.600	26 N.J.R. 4762(a)
10:69A-5.3, 5.6, 6.2, 6.12	Pharmaceutical Assistance to the Aged and Disabled: eligibility and income criteria	26 N.J.R. 3142(a)	R.1995 d.10	27 N.J.R. 242(a)
10:81-2.6, 3.9, 3.10, 13.3	Public Assistance Manual: AFDC-N segment eligibility of aliens	26 N.J.R. 3930(a)	R.1994 d.612	26 N.J.R. 5022(a)
10:81-11.9	Public Assistance Manual: $50 disregarded child support payment	26 N.J.R. 1937(a)		
10:82-2.3	Assistance Standards Handbook: AFDC-N segment eligibility of aliens	26 N.J.R. 3932(a)	R.1994 d.613	26 N.J.R. 5022(b)
10:82-3.14	Assistant Standards Handbook: administrative correction regarding guardians of adolescent parents	_____	_____	26 N.J.R. 4765(a)
10:83-1.11	Supplemental Security Income payment levels for 1995	_____	_____	26 N.J.R. 5023(a)
10:85	General Assistance Manual	26 N.J.R. 2757(b)	R.1994 d.591	26 N.J.R. 4765(b)
10:85-4.6	General Assistance Program: extension of temporary rental assistance benefits	26 N.J.R. 1756(a)		
10:87-2.31	Food Stamp Program: applications in pending status	26 N.J.R. 4298(a)		
10:89	Home Energy Assistance Handbook	26 N.J.R. 4726(a)		
10:122-2.4, 2.5, 4.5, 4.8, 5.2, 9.1–9.5	Manual of Requirements for Child Care Centers	26 N.J.R. 4139(a)	R.1995 d.87	27 N.J.R. 499(c)
10:123-3.4	Personal needs allowance for SSI and GPA recipients in residential health care facilities and boarding home	_____	_____	26 N.J.R. 5023(b)
10:126-1.2, 1.4, 2.2–2.4, 2.6, 3.2, 4.1, 4.2, 4.6, 4.8, 5.1–5.4, 5.6–5.10, 6.1–6.6, 6.8, 6.9, 6.13, 6.18, 6.20	Manual of Requirements for Family Day Care Registration	26 N.J.R. 3144(a)	R.1994 d.625	26 N.J.R. 5023(c)
10:129A	Child protective services investigations and determinations of abuse and neglect	26 N.J.R. 3700(a)		
10:133A-1.7, 1.9, 1.10, 1.11, 1.12	Division of Youth and Family Services: initial reponse	26 N.J.R. 3355(a)		
10:133G	Division of Youth and Family Services: client information	27 N.J.R. 38(a)		

Most recent update to Title 10: TRANSMITTAL 1994-11 (supplement November 21, 1994)

CORRECTIONS—TITLE 10A

10A:2	Fiscal management of inmate accounts, welfare funds, claims, and other financial matters	26 N.J.R. 4299(a)	R.1995 d.21	27 N.J.R. 118(a)
10A:12-2	Inmate liaison committees	26 N.J.R. 4881(a)		
10A:26	Bureau of Parole: policies and procedures	26 N.J.R. 4143(a)	R.1995 d.85	27 N.J.R. 550(a)
10A:71	State Parole Board rules	26 N.J.R. 4150(a)		

You're viewing an archived copy from the New Jersey State Library.

N.J.A.C. CITATION		PROPOSAL NOTICE (N.J.R. CITATION)	DOCUMENT NUMBER	ADOPTION NOTICE (N.J.R. CITATION)
10A:71-3.21	State Parole Board: future parole eligibility terms	27 N.J.R. 288(a)		
10A:71-7.16	State Parole Board: administrative correction regarding board panel action	_____	_____	26 N.J.R. 4771(a)

Most recent update to Title 10A: TRANSMITTAL 1994-9 (supplement October 17, 1994)

INSURANCE—TITLE 11

11:1-20.1, 20.3, 22.1	Cancellation and nonrenewal of homeowners' policies	26 N.J.R. 4303(a)	R.1995 d.52	27 N.J.R. 363(a)
11:2-1	Admission requirements for foreign and alien life and health insurers	26 N.J.R. 4586(a)	R.1995 d.80	27 N.J.R. 559(a)
11:2-41	Windstorm Market Assistance Program for voluntary market homeowners' coverage	26 N.J.R. 4304(a)	R.1995 d.53	27 N.J.R. 364(a)
11:3-2B	Market Transition Facility of New Jersey: payment prioritization and claims payment deferral	26 N.J.R. 4590(a)	R.1995 d.50	27 N.J.R. 368(a)
11:3-16.4, 16.5, 31, App.	Private passenger automobile insurers: examination of financial experience	27 N.J.R. 41(a)		
11:3-16.7	Automobile insurers rate filing requirements	26 N.J.R. 900(a)		
11:3-28.2, 28.14–28.17	Unsatisfied Claim and Judgment Fund: uninsured motorists case assignment procedures	26 N.J.R. 2190(a)	R.1994 d.597	26 N.J.R. 4772(a)
11:3-28.13, 28.16	Unsatisfied Claim and Judgment Fund: insurer's obligation to obtain recovery of paid medical expense benefit claims and paid benefits (UCJ claims)	26 N.J.R. 4595(a)		
11:3-29.4	Automobile insurance PIP and motor bus coverage: administrative correction regarding application of Medical Fee Schedules	_____	_____	26 N.J.R. 5041(a)
11:3-33.2, 44.3, 44.4	Automobile insurance: provision of coverage to all eligible persons	26 N.J.R. 3591(a)	R.1994 d.598	26 N.J.R. 4777(a)
11:3-45	Private passenger automobile insurance: annual premium survey	27 N.J.R. 289(a)		
11:4-25	Funeral insurance policies	26 N.J.R. 4727(a)		
11:4-38	HMO informational rate filing requirements	27 N.J.R. 291(a)		
11:5-1.2, 1.4, 1.5, 1.19, 1.29	Real Estate Commission: licensing requirements	26 N.J.R. 3111(a)	R.1995 d.23	27 N.J.R. 370(a)
11:5-1.7	Real Estate Commission: preproposal concerning mass marketing and brokerage licensure requirement	26 N.J.R. 3110(a)		
11:5-1.43	Real Estate Commission: consumer information statement	26 N.J.R. 3113(a)		
11:13-7.4, 7.5	Commercial lines insurance: exclusions from coverage; refiling of policy forms	26 N.J.R. 3805(b)		
11:15-2	Joint insurance funds for local governmental units	26 N.J.R. 2725(a)		
11:15-2	Joint insurance funds for local governmental units: extension of comment period	26 N.J.R. 3592(a)		
11:16-5	Insurer's health fraud prevention/detection plan	26 N.J.R. 4882(a)		
11:17A	Insurance producers and limited insurance representatives: marketing conduct standards	26 N.J.R. 4307(a)	R.1995 d.60	27 N.J.R. 562(a)
11:17A-1.2, 1.7	Automobile insurance: provision of coverage to all eligible persons	26 N.J.R. 3591(a)	R.1994 d.598	26 N.J.R. 4777(a)
11:17B	Insurance producers and limited insurance representatives: commissions and fees	26 N.J.R. 4307(a)	R.1995 d.60	27 N.J.R. 562(a)
11:17C	Insurance producer standards of conduct: management of funds	26 N.J.R. 4307(a)	R.1995 d.60	27 N.J.R. 562(a)
11:17D	Insurance producers and limited insurance representatives: administrative procedures and penalties	26 N.J.R. 4307(a)	R.1995 d.60	27 N.J.R. 562(a)
11:18	Medical Malpractice Reinsurance Recovery Fund surcharge	26 N.J.R. 2195(a)	R.1995 d.26	27 N.J.R. 371(a)
11:19-4	Financial Examinations Monitoring System: data submission requirements for domestic life/health insurers	26 N.J.R. 1195(a)		
11:20-1.2	Individual Health Coverage Program: conversion and individual health benefits plans	27 N.J.R. 41(b)	R.1995 d.37	27 N.J.R. 371(b)
11:20-3.2, 4.1, 12.3, 12.5, Exh. A–G, Q	Individual Health Coverage Program: standard policy forms	26 N.J.R. 4884(a)		
11:20-App. Exh. A–F, M, N, O, P	Individual Health Coverage Program: policy forms, PPO and POS standard plan provisions, schedule of benefits	26 N.J.R. 3356(b)	R.1994 d.614	26 N.J.R. 5041(b)
11:21-2.1, 2.5	Small Employer Health Benefits Program: Board membership	26 N.J.R. 4310(a)	R.1995 d.65	27 N.J.R. 585(a)
11:21-2.5	Small Employer Health Benefits Program: public hearing regarding Board membership	26 N.J.R. 4311(a)		
11:21-3.2	Small Employer Health Benefits Program: optional benefit riders	26 N.J.R. 4729(a)	R.1995 d.51	27 N.J.R. 565(a)
11:21-7.4	Small Employer Health Benefits Program: carriers acting as administrators for small employers	26 N.J.R. 3117(a)		

Most recent update to Title 11: TRANSMITTAL 1994-11 (supplement November 21, 1994)

You're viewing an archived copy from the New Jersey State Library.

N.J.A.C. CITATION		PROPOSAL NOTICE (N.J.R. CITATION)	DOCUMENT NUMBER	ADOPTION NOTICE (N.J.R. CITATION)
LABOR—TITLE 12				
12:16	Unemployment Compensation and Temporary Disability Insurance: contributions, records and reports	27 N.J.R. 61(a)		
12:16-23	Services excluded from coverage by the Unemployment Compensation Law	26 N.J.R. 4730(a)	R.1995 d.84	27 N.J.R. 501(a)
12:18 App.	Department of Labor hearings	26 N.J.R. 2174(a)		
12:20	Board of Review and Appeal Tribunal	26 N.J.R. 1941(a)		
12:20	Department of Labor hearings	26 N.J.R. 2174(a)		
12:40	Worker Adjustment and Retraining Notification (WARN) procedures	26 N.J.R. 4311(b)	R.1995 d.42	27 N.J.R. 373(a)
12:56-6.1, 7.5, 7.6	Wage and Hour compliance: limousine operators	26 N.J.R. 94(a)		
12:90	Division of Workplace Standards: boilers, pressure vessels, refrigeration	26 N.J.R. 3810(a)	R.1994 d.599	26 N.J.R. 4828(a)
12:100-10.10	Safety and health standards for public employees: respiratory protection devices	26 N.J.R. 4313(a)	R.1995 d.43	27 N.J.R. 373(b)
12:120	Asbestos licenses and permits	27 N.J.R. 71(a)		
12:195-1.9	Carnival-amusement rides: inspection fees	26 N.J.R. 2520(a)		
12:235-1.6	Workers' Compensation 1995 maximum benefit rate: administrative correction	———	———	26 N.J.R. 5032(a)
12:235-14.7	Uninsured Employer's Fund: attorney fees	26 N.J.R. 2199(a)		
12:235-14.7	Uninsured Employer's Fund: withdrawal of proposal regarding attorney fees	26 N.J.R. 4313(b)		

Most recent update to Title 12: TRANSMITTAL 1994-7 (supplement November 21, 1994)

COMMERCE AND ECONOMIC DEVELOPMENT—TITLE 12A				
12A:10	Goods and Services Contracts for Small Businesses, Minority Businesses, and Female Businesses	25 N.J.R. 4889	R.1994 d.309	27 N.J.R. 129(a)
12A:10	Goods and services contracts for small businesses and female and minority businesses	27 N.J.R. 52(a)		
12A:10A	Minority and Female Contractor and Subcontractor Participation in State Construction Contracts	25 N.J.R. 4461(b)	R.1994 d.310	27 N.J.R. 135(a)
12A:10A	Minority and female contractor and subcontractor participation in State construction contracts	27 N.J.R. 54(a)		
12A:31-1.4	Development Authority for Small Businesses, Minorities' and Women's Enterprises: reopening of comment period regarding allocation of direct loan assistance	26 N.J.R. 1434(a)		

Most recent update to Title 12A: TRANSMITTAL 1994-3 (supplement November 21, 1994)

LAW AND PUBLIC SAFETY—TITLE 13				
13:3-3.4	Legalized Games of Chance Control Commission: maximum fee for games participation	26 N.J.R. 4951(a)		
13:4	Housing discrimination	26 N.J.R. 1942(a)		
13:9-1.1	Housing discrimination	26 N.J.R. 1942(a)		
13:13	Housing discrimination	26 N.J.R. 1942(a)		
13:18-1.5–1.9, 1.12, 1.15	Division of Motor Vehicles: overweight oceanborne containers	26 N.J.R. 2521(a)		
13:27	Board of Architects rules	26 N.J.R. 4952(a)		
13:30	Board of Dentistry rules	27 N.J.R. 293(a)		
13:30-8.18	Board of Dentistry: licensee continuing education	26 N.J.R. 1948(a)	R.1994 d.621	26 N.J.R. 5032(b)
13:31-1.11, 1.16	Board of Examiners of Electrical Contractors: fee schedule; requirement of ID card defined	26 N.J.R. 2742(a)	R.1994 d.594	26 N.J.R. 4780(a)
13:33	Board of Ophthalmic Dispensers and Ophthalmic Technicians: professional practice standards	27 N.J.R. 298(a)		
13:33-4.1	Board of Ophthalmic Dispensers and Ophthalmic Technicians: contact lens dispensing	26 N.J.R. 1595(a)		
13:35-5.1	Board of Medical Examiners: release of contact lens specification to patient	26 N.J.R. 1219(a)		
13:35-6.17	Board of Medical Examiners: professional fees and investments	25 N.J.R. 5441(a)	R.1995 d.8	27 N.J.R. 120
13:35-8.7, 8.8	Board of Medical Examiners: fitting and dispensing of deep ear canal hearing aid devices	26 N.J.R. 1301(b)	R.1994 d.595	26 N.J.R. 4780(b)
13:37	Board of Nursing rules	26 N.J.R. 4731(a)		
13:38-6.1	Board of Optometrists: release of contact lens specification to patient	26 N.J.R. 1220(a)		
13:39-1.2, 6.7, 9.1, 9.7, 10.4, 11.1	Board of Pharmacy: pharmacy technicians	26 N.J.R. 2743(a)		
13:39-11.3, 11.16	Board of Pharmacy: sterile admixture services in retail pharmacies	27 N.J.R. 43(a)		
13:39A-2.3	Board of Physical Therapy: public forum on direct supervision of physical therapist assistants	26 N.J.R. 1604(a)		
13:40-6.1, 11	Board of Professional Engineers and Land Surveyors: continuing competency requirements for land surveyors	26 N.J.R. 4314(a)		

You're viewing an archived copy from the New Jersey State Library.

N.J.A.C. CITATION		PROPOSAL NOTICE (N.J.R. CITATION)	DOCUMENT NUMBER	ADOPTION NOTICE (N.J.R. CITATION)
13:42-1.2, 1.3, 1.5, 2.1, 4.5, 7.1, 7.2A, 7.3, 7.5, 7.6, 9.9, 10.16	Board of Psychological Examiners: unlicensed practitioners	26 N.J.R. 4738(a)		
13:44D-4.1, 4.2	Advisory Board of Public Movers and Warehousemen: bill of lading and insurance legal liability	25 N.J.R. 5449(a)	R.1995 d.9	27 N.J.R. 125(a)
13:44E-1.1	Board of Chiropractic Examiners: scope of chiropractic practice	26 N.J.R. 3932(b)		
13:44E-2.2	Board of Chiropractic Examiners: patient records and cessation of practice	26 N.J.R. 2866(a)		
13:44E-2.6	Board of Chiropractic Examiners: practice identification	26 N.J.R. 4964(a)		
13:44E-2.13	Board of Chiropractic Examiners: overutilization; excessive fees	26 N.J.R. 1231(b)		
13:45A-14.4	Office of Weights and Measures: unit pricing of infant formula	27 N.J.R. 302(a)		
13:45A-27	Division of Consumer Affairs: licensee duty to cooperate with licensing board or agency	26 N.J.R. 3128(a)		
13:45A-28	Motor vehicle leasing	26 N.J.R. 3243(a)		
13:45B-1.2, 2, 3.1, 4, 5, 6.4, 6.6, 7.1, 8.2, 9, 10.1, 11.1, 12.1, 14, 15	Health care service firms: registration requirements and standards for placement of health care practitioners	26 N.J.R. 4316(a)		
13:47-1–4, 6–9, 13–16	Legalized games of chance	26 N.J.R. 4326(a)	R.1995 d.41	27 N.J.R. 374(a)
13:47A-1.10A, 2.6A, 13, 14	Bureau of Securities: rules of practice	26 N.J.R. 3814(a)		
13:47A-1.10A, 2.6A, 13, 14	Bureau of Securities: extension of comment period concerning rules of practice	26 N.J.R. 4337(a)		
13:47A-3.1, 3.3, 3.4, 4.3, 12	Bureau of Securities: limited securities offerings	27 N.J.R. 303(a)		
13:47B-1.5	Weighing and measuring devices: type approval	26 N.J.R. 4966(a)		
13:47F	Weighing and measuring devices: fees for registration, inspection and testing	26 N.J.R. 4966(a)		
13:49-1.1, 1.5	State Medical Examiner: death investigations and potential organ donations	26 N.J.R. 4447(a)	R.1995 d.36	27 N.J.R. 380(a)
13:54-1.15	Division of State Police: confidentiality of firearms permits, ID cards, licenses, and background investigations	27 N.J.R. 305(a)		
13:59	State Police: criminal history background checks for non-criminal justice purposes	26 N.J.R. 3595(a)	R.1995 d.601	26 N.J.R. 4782(a)
13:70	Thoroughbred racing rules	26 N.J.R. 4742(a)		
13:70-4.22	Thoroughbred racing: collection and use of Social Security numbers by Racing Commission	27 N.J.R. 44(a)		
13:70-14A.1	Thoroughbred racing: administration of phenylbutazone on day of race	26 N.J.R. 1955(a)		
13:70-14A.8	Thoroughbred racing: possession of drugs or drug instruments	26 N.J.R. 1315(a)		
13:70-14A.9	Thoroughbred racing: administration of phenylbutazone on day of race	26 N.J.R. 1956(a)		
13:70-29.50	Thoroughbred racing: Daily Triple	27 N.J.R. 306(a)		
13:71	Harness racing rules	26 N.J.R. 4744(a)		
13:71-3.3	Harness racing: State Steward and Board of Judges decisions	26 N.J.R. 4969(a)		
13:71-7.37	Harness racing: collection and use of Social Security numbers by Racing Commission	27 N.J.R. 44(b)		
13:71-19.6	Harness racing: safety vests	26 N.J.R. 4482(b)		
13:71-23.1	Thoroughbred racing: administration of phenylbutazone on day of race	26 N.J.R. 1956(b)		
13:71-23.8	Thoroughbred racing: administration of phenylbutazone on day of race	26 N.J.R. 1957(a)		
13:71-23.9	Harness racing: possession of drugs or drug instruments	26 N.J.R. 1316(a)		
13:71-27.54	Harness racing: Daily Triple	27 N.J.R. 306(b)		
13:72-9.1, 9.3–9.6	Casino simulcasting: supervisors of mutuels and verifiers at hub facilities	27 N.J.R. 45(a)		
13:75-1.5	Violent Crimes Compensation Board: victim counseling referral	27 N.J.R. 307(a)		
13:75-1.6	Violent Crimes Compensation Board: eligibility of claims	27 N.J.R. 307(b)		

Most recent update to Title 13: TRANSMITTAL 1994-11 (supplement November 21, 1994)

PUBLIC UTILITIES—TITLE 14

14:12-5.3	Demand Side Management Resource Plan: administrative correction regarding public notice and hearing	———	———	26 N.J.R. 4786(a)

You're viewing an archived copy from the New Jersey State Library.

N.J.A.C. CITATION		PROPOSAL NOTICE (N.J.R. CITATION)	DOCUMENT NUMBER	ADOPTION NOTICE (N.J.R. CITATION)
14:17-6.17	Office of Cable Television: scheduling hearings for public comment	27 N.J.R. 46(a)		
14:18-3.24	Cable television: late fees and charges	26 N.J.R. 105(a)		
14:25	Solar energy devices and systems: technical sufficiency standards for sales tax exemption	27 N.J.R. 307(c)		
14:31	Business Energy Improvement Program	26 N.J.R. 4482(c)		
14:33	Energy Facility Review Board	26 N.J.R. 4484(a)		
14:34	Periodic reporting of energy information by energy industries	26 N.J.R. 4484(b)		

Most recent update to Title 14: TRANSMITTAL 1994-3 (supplement May 16, 1994)

ENERGY—TITLE 14A

14A:6	Business Energy Improvement Program: recodify as 14:31	26 N.J.R. 4482(c)	R.1995 d.68	27 N.J.R. 503(a)
14A:8	Energy Facility Review Board: recodify as 14:33	26 N.J.R. 4484(a)	R.1995 d.69	27 N.J.R. 503(b)
14A:11	Periodic reporting by energy industries: recodify as 14:34	26 N.J.R. 4484(b)	R.1995 d.70	27 N.J.R. 504(a)

Most recent update to Title 14A: TRANSMITTAL 1994-1 (supplement February 22, 1994)

STATE—TITLE 15

Most recent update to Title 15: TRANSMITTAL 1993-3 (supplement December 20, 1993)

PUBLIC ADVOCATE—TITLE 15A

Most recent update to Title 15A: TRANSMITTAL 1990-3 (supplement August 20, 1990)

TRANSPORTATION—TITLE 16

16:20A	Federal Aid Urban System Substitution Program: county and municipal aid	26 N.J.R. 4485(a)	R.1995 d.71	27 N.J.R. 504(b)
16:20B	Transportation Trust Fund Authority Act: municipal fund for road and bridge improvement projects	26 N.J.R. 4486(a)	R.1995 d.72	27 N.J.R. 504(c)
16:24	Public utility rearrangement agreements	26 N.J.R. 4160(a)	R.1995 d.15	27 N.J.R. 126(a)
16:28-1.61	Speed limit zones along Collins Avenue-Nixon Drive under State jurisdiction in Burlington County	26 N.J.R. 4337(b)		
16:28-1.62	Speed limits along connector roads to U.S. 202, U.S. 206, and Route 28 in Somerset County	27 N.J.R. 46(b)		
16:28-1.69	Speed limit zones along U.S. 130, including parts of I-295, U.S. 30 and U.S. 206, in East Windsor	27 N.J.R. 47(a)		
16:28-1.77	Speed limits along Route 29 in Mercer and Hunterdon counties	26 N.J.R. 3821(a)	R.1994 d.586	26 N.J.R. 4786(a)
16:28-1.79	Speed limit zones along Route 94 in Sussex County	26 N.J.R. 3133(a)		
16:28-1.96	Speed limit zones along Route 45 in Harrison Township	26 N.J.R. 4970(a)		
16:28-1.132	Speed limit zones along Route 47 in Dennis Township, Cape May	26 N.J.R. 4745(a)		
16:28-1.158	Speed limits along Route 179 in Lambertville	26 N.J.R. 3820(b)	R.1994 d.587	26 N.J.R. 4787(a)
16:28-1.158	Speed limit zones along Route 179 in West Amwell Township	26 N.J.R. 4486(b)	R.1995 d.62	27 N.J.R. 505(a)
16:28-1.181	Speed limit zones along Rising Sun Square Road-Old York Road in Bordentown Township	26 N.J.R. 3934(a)	R.1994 d.605	26 N.J.R. 5033(a)
16:28A-1.7	Restricted parking along U.S. 9 in Middle Township, Cape May	26 N.J.R. 3935(a)	R.1994 d.602	26 N.J.R. 5034(a)
16:28A-1.21	No stopping or standing zones along U.S. 30 in Oaklyn Borough	26 N.J.R. 4971(a)		
16:28A-1.28	No stopping or standing zones along U.S. 40 in Pilesgrove Township, Salem County	26 N.J.R. 3936(a)	R.1994 d.603	26 N.J.R. 5034(b)
16:28A-1.33	No stopping or standing zone along Route 47 in Middle Township, Cape May	26 N.J.R. 3936(b)	R.1994 d.604	26 N.J.R. 5034(c)
16:28A-1.33	No stopping or standing zone on Route 47 in Millville	27 N.J.R. 309(a)		
16:28A-1.36	Handicapped parking along Route 57 in Washington Borough, Warren County	26 N.J.R. 4160(b)	R.1995 d.67	27 N.J.R. 505(b)
16:28A-1.37	No stopping or standing zones along Route 70 in Cherry Hill and Pennsauken	26 N.J.R. 4338(a)		
16:28A-1.38	No stopping or standing along Route 71 in Bradley Beach Borough	26 N.J.R. 4161(a)	R.1995 d.66	27 N.J.R. 505(c)
16:28A-1.38	Parking restrictions along Route 71 in Asbury Park	27 N.J.R. 48(a)		
16:28A-1.41	Bus stops along Route 77 in Bridgeton	27 N.J.R. 49(a)		
16:28A-1.52	No stopping or standing zones along Route 173 in Town of Clinton	26 N.J.R. 4971(b)		
16:28A-1.57	Bus stop on U.S. 206 in Princeton Township	26 N.J.R. 3820(a)	R.1995 d.54	27 N.J.R. 506(a)
16:28A-1.57	Bus stop on U.S. 206 in Princeton Township: administrative correction and extension of comment period	26 N.J.R. 4487(a)		
16:28A-1.58	Parking restrictions along U.S. 206-94 in Newton	27 N.J.R. 49(b)		
16:30-1.4	One-way access along U.S. 202 in Bernardsville	27 N.J.R. 50(a)		
16:30-3.9	Truck lane-usage restriction along Route I-80 in Morris County	26 N.J.R. 4162(a)		

You're viewing an archived copy from the New Jersey State Library.

N.J.A.C. CITATION		PROPOSAL NOTICE (N.J.R. CITATION)	DOCUMENT NUMBER	ADOPTION NOTICE (N.J.R. CITATION)
16:30-3.11	Left turn lane along Route 38 in Lumberton and Southampton townships: correction to proposal and extension of comment period	26 N.J.R. 1317(a)		
16:30-3.13	Left turns along U.S. 9 in Middle Township, Cape May	26 N.J.R. 4746(a)		
16:30-3.14	Left turn lane along Route 154 in Cherry Hill	27 N.J.R. 51(a)		
16:30-3.15	Left turn lane along Route 34 in Old Bridge	27 N.J.R. 51(b)		
16:30-7.4	Interstate highways: classes of traffic	26 N.J.R. 4162(b)	R.1995 d.16	27 N.J.R. 126(b)
16:30-9.14	Bidwells Creek bridge restrictions, Route 47 in Middle Township, Cape May	26 N.J.R. 3937(a)	R.1994 d.606	26 N.J.R. 5035(a)
16:30-9.23	Drawbridge usage along Route 152 in Atlantic County	26 N.J.R. 4487(b)	R.1995 d.63	27 N.J.R. 506(b)
16:31-1.8	Left turn prohibitions along Route 47 in Vineland	26 N.J.R. 3822(a)	R.1994 d.589	26 N.J.R. 4787(c)
16:31-1.8	Turn prohibitions along Route 47 in Middle Township, Cape May	26 N.J.R. 3937(b)	R.1994 d.607	27 N.J.R. 506(c)
16:31-1.22	Turn prohibitions along U.S. 130 in Burlington City	26 N.J.R. 3938(a)	R.1994 d.608	26 N.J.R. 5035(b)
16:31-1.26	Left turn prohibitions along Route 27 in Metuchen and Highland Park	26 N.J.R. 4488(a)		
16:32	Truck operations within State	26 N.J.R. 4163(a)	R.1995 d.73	27 N.J.R. 507(a)
16:47-1.1, 3.5, 3.8, 3.9, 3.12, 3.16, 4.3, 4.6, 4.7, 4.9, 4.10, 4.12, 4.14, 4.24, 4.25, 4.26, 4.27, 4.29, 4.33, 4.34, 4.35, 4.36, 4.37, 5.2, App. B, C, E, L	State Highway Access Management Code	26 N.J.R. 2549(a)		
16:49	Transportation of hazardous materials	26 N.J.R. 4488(b)	R.1995 d.74	27 N.J.R. 509(a)
16:50-15	Employer Trip Reduction Program tax credit	26 N.J.R. 756(a)	R.1995 d.75	27 N.J.R. 521(a)
16:51	Regulation of autobuses and transportation public utilities: pre-proposal	26 N.J.R. 1317(b)		
16:53D	Regulation of autobuses and transportation public utilities: pre-proposal	26 N.J.R. 1317(b)		
16:62	Air safety and hazardous zoning	26 N.J.R. 4502(a)	R.1995 d.76	27 N.J.R. 525(a)
16:77	Use or occupancy of NJ TRANSIT-owned property	26 N.J.R. 4972(a)		

Most recent update to Title 16: TRANSMITTAL 1994-11 (supplement November 21, 1994)

TREASURY-GENERAL—TITLE 17

17:2	Public Employees' Retirement System	26 N.J.R. 4747(a)		
17:2-4.3	Public Employees' Retirement System: school year members	26 N.J.R. 3823(a)		
17:3-4.3	Teachers' Pension and Annuity Fund: school year members	26 N.J.R. 3606(a)		
17:4-1.4	Police and Firemen's Retirement System: election of member-trustee	26 N.J.R. 3938(b)	R.1995 d.2	27 N.J.R. 127(a)
17:9-4.1, 4.5	State Health Benefits Program: appointive officer eligibility	26 N.J.R. 109(a)		
17:9-4.2, 8.3, 9.1	State Health Benefits Program: continued coverage under voluntary furlough program	26 N.J.R. 2202(a)	R.1995 d.3	27 N.J.R. 128(a)
17:12	Purchase Bureau	26 N.J.R. 3248(a)	R.1995 d.18	27 N.J.R. 128(b)
17:12	Purchase Bureau rules: extension of comment period	26 N.J.R. 4166(a)		
17:13	Goods and services contracts for small businesses, minority businesses and female businesses	25 N.J.R. 4889(a)	R.1994 d.309	27 N.J.R. 129(a)
17:13	Goods and services contracts for small businesses and female and minority businesses	27 N.J.R. 52(a)		
17:14	Minority and female contractor and subcontractor participation in State construction contracts	25 N.J.R. 4461(a)	R.1994 d.310	27 N.J.R. 135(a)
17:14	Minority and female contractor and subcontractor participation in State construction contracts	27 N.J.R. 54(a)		
17:19	Division of Building and Construction: classification and qualification of bidders	26 N.JR. 4747(b)		
17:25	Collection of debts owed to NJHEAA by public employees	27 N.J.R. 309(b)		

Most recent update to Title 17: TRANSMITTAL 1994-8 (supplement November 21, 1994)

TREASURY-TAXATION—TITLE 18

18:1-1.9	Office of Criminal Investigation: training of Special Agents	27 N.J.R. 56(a)		
18:1-2.4	Issuance of warrants by Division of Taxation	26 N.J.R. 4975(a)		
18:7-3.6	Corporation Business Tax rates	27 N.J.R. 57(a)		
18:7-3.19	Corporation Business Tax: employer trip reduction program tax credit	26 N.J.R. 4976(a)		
18:18	Motor fuels taxes	26 N.J.R. 4512(a)	R.1995 d.79	27 N.J.R. 535(a)
18:19-1.1, 2.1, 2.2, 2.7, 3.1, 3.2, 4.1, 4.2, 5.5, 5.6, 6.1	Retail sales of motor fuels	26 N.J.R. 4512(a)	R.1995 d.79	27 N.J.R. 535(a)

You're viewing an archived copy from the New Jersey State Library.

N.J.A.C. CITATION		PROPOSAL NOTICE (N.J.R. CITATION)	DOCUMENT NUMBER	ADOPTION NOTICE (N.J.R. CITATION)
18:24-9.13	Sales and Use Tax: student organization purchases	26 N.J.R. 4977(a)		
18:24-28.2	Sales of horses in claiming races	26 N.J.R. 4166(b)	R.1994 d.626	26 N.J.R. 5035(c)
18:26-1.1, 2.2, 2.5, 2.9, 2.12, 2.15, 3.2, 3.7–3.10, 6.3, 6.6, 7.7, 7.12, 8.5–8.8, 8.17, 8.18, 8.22, 9.7, 9.13, 9.15, 10.5, 10.7, 10.13, 11.1, 11.31, 12.2, 12.3–12.6, 12.9, 12.10, 12.12	Transfer inheritance and estate tax: application of Taxpayer Bill of Rights	26 N.J.R. 4166(c)	R.1994 d.627	26 N.J.R. 5036(a)
18:35-1.28	Gross income tax: commuter transportation benefits reporting by employer	26 N.J.R. 4173(a)	R.1995 d.19	27 N.J.R. 143(a)

Most recent update to Title 18: TRANSMITTAL 1994-6 (supplement October 17, 1994)

TITLE 19—OTHER AGENCIES

19:8-7.2, 7.3	Garden State Parkway: administrative correction regarding copy fees	27 N.J.R. 548(a)		
19:25-1.7, 9.2, 9.3, 10, 11	ELEC: candidacy contribution reporting and limits	27 N.J.R. 312(a)		
19:25-20.19	Annual registration and filing fee of legislative agents	26 N.J.R. 4978(a)		
19:61-6	Executive Commission on Ethical Standards: State officials and employees and attendance at events, acceptance of honoraria, and compensation for published works	26 N.J.R. 4757(a)		

Most recent update to Title 19: TRANSMITTAL 1994-11 (supplement November 21, 1994)

TITLE 19 SUBTITLE K—CASINO CONTROL COMMISSION/CASINO REINVESTMENT DEVELOPMENT AUTHORITY

19:40-1.2	Gaming chips and plaques	26 N.J.R. 1441(b)		
19:40-1.6, 4.1	General provisions: administrative corrections	_____	_____	26 N.J.R. 4788(a)
19:40-4.1, 4.2, 4.8	Confidential information	26 N.J.R. 1434(a)		
19:41-1.1, 1.1A, 1.2, 1.2A, 1.3, 1.6, 1.8	Casino employee licensure and registration	26 N.J.R. 4338(a)		
19:41-1.3	Keno	26 N.J.R. 2218(a)		
19:41-1.6	Casino employee license position endorsements	26 N.J.R. 910(a)		
19:41-5.13	Key Standard Qualifier Renewal Form	26 N.J.R. 3824(a)	R.1994 d.592	26 N.J.R. 4789(a)
19:41-6.1–6.5	Statements of compliance	26 N.J.R. 1319(a)		
19:41-7.1A, 7.7, 14.3	Federal criminal record checks of casino employees and applicants	27 N.J.R. 319(a)		
19:41-8.8	Reapplication for license, registration, qualification or approval after denial or revocation	26 N.J.R. 1993(a)		
19:43-2.7A	Key Standard Qualifier Renewal Form	26 N.J.R. 3824(a)	R.1994 d.592	26 N.J.R. 4789(a)
19:43-2.7A	Federal criminal record checks of casino employees and applicants	27 N.J.R. 319(a)		
19:43-11.2	Contents of renewal application: administrative correction	27 N.J.R. 382(a)		
19:44	Gaming schools	26 N.J.R. 4174(b)		
19:44-5.2, 8.3, 8.6	Qualification standards for casino employees and gaming school instructors	26 N.J.R. 2207(a)		
19:45-1.1	Gaming chips and plaques	26 N.J.R. 1441(b)		
19:45-1.1	Definitions: administrative correction	27 N.J.R. 382(a)		
19:45-1.1, 1.1A, 1.2, 1.8, 1.10, 1.11, 1.12, 1.15, 1.19, 1.25, 1.33, 1.46–1.51	Keno	26 N.J.R. 2218(a)		
19:45-1.1, 1.18, 1.36, 1.40B, 1.44	Accounting and internal controls: administrative corrections	_____	_____	26 N.J.R. 4788(a)
19:45-1.1, 1.25	Exchange of annuity jackpot checks	26 N.J.R. 2211(a)		
19:45-1.1, 1.26, 1.26A	Substitution and redemption of patron checks	26 N.J.R. 3825(a)	R.1995 d.40	27 N.J.R. 382(b)
19:45-1.1, 1.37A, 1.39	Electronic transfer credit systems at slot machines; progressive slot machines	26 N.J.R. 2214(a)		
19:45-1.9	Cash compliments based upon patron's actual loss	26 N.J.R. 4173(b)	R.1995 d.77	27 N.J.R. 549(a)
19:45-1.12	Supervision of gaming tables	26 N.J.R. 4174(a)	R.1995 d.11	27 N.J.R. 144(a)
19:45-1.12	Casino employee licensure and registration	26 N.J.R. 4338(a)		
19:45-1.15–1.19	Super Pan 9: temporary adoption of gaming rules	27 N.J.R. 549(b)		
19:45-1.25	Exchange of counter checks	26 N.J.R. 1994(a)		
19:45-1.44	Computer recordation and monitoring of slot machines: administration correction	27 N.J.R. 382(a)		
19:46-1.1, 1.2, 1.4, 1.5	Gaming chips and plaques	26 N.J.R. 1441(b)		
19:46-1.5, 1.20, 1.33	Keno	26 N.J.R. 2218(a)		
19:46-1.7	Roulette	27 N.J.R. 57(b)		

You're viewing an archived copy from the New Jersey State Library.

N.J.A.C. CITATION		PROPOSAL NOTICE (N.J.R. CITATION)	DOCUMENT NUMBER	ADOPTION NOTICE (N.J.R. CITATION)
19:46-1.12A	Super Pan 9: temporary adoption of gaming rules	27 N.J.R. 549(b)		
19:46-1.13B	Additional wager in pai gow poker	26 N.J.R. 4343(a)	R.1995 d.78	27 N.J.R. 549(c)
19:46-1.13F, 1.17, 1.19	Double Down Stud	26 N.J.R. 1323(a)	R.1994 d.593	26 N.J.R. 4790(a)
19:46-1.13H, 1.17, 1.18, 1.19	Let It Ride: temporary adoption of gaming rules	27 N.J.R. 386(a)		
19:46-1.15, 1.33	Gaming equipment: administrative corrections	_____	_____	26 N.J.R. 4788(a)
19:47-1.5, 2.15	Rules of the games: administrative corrections	_____	_____	26 N.J.R. 4788(a)
19:47-1.6	Supplemental wagers in craps	26 N.J.R. 4978(b)		
19:47-5.1–5.4	Roulette	27 N.J.R. 57(b)		
19:47-11.8, 11.8A, 11.8B, 11.13	Additional wager in pai gow poker	26 N.J.R. 4343(a)	R.1995 d.78	27 N.J.R. 549(c)
19:47-13	Super Pan 9: temporary adoption of gaming rules	27 N.J.R. 549(b)		
19:47-15	Keno	26 N.J.R. 2218(a)		
19:47-17	Double Down Stud	26 N.J.R. 1323(a)	R.1994 d.593	26 N.J.R. 4790(a)
19:47-18	Let It Ride: temporary adoption of gaming rules	27 N.J.R. 386(a)		
19:50-2.2	New Year's Eve combination sales by CHAB licensees	27 N.J.R. 60(a)		
19:51-1.1, 1.2	Gaming-related casino service industry licensure	26 N.J.R. 4344(a)		
19:53-1.2, 5.5, 5.7	Disbursement credit for goods and services with certified MBEs and WBEs; commercial buyers	26 N.J.R. 785(a)		
19:54	Gross revenue tax rules	26 N.J.R. 4181(a)	R.1995 d.28	27 N.J.R. 387(a)
19:54-1.8, 1.10	Annual gross revenue tax examinations; tax deficiency penalties and sanctions	26 N.J.R. 1994(a)		
19:55-9.1, 9.3–9.6	Casino simulcasting: supervisors of mutuels and verifiers at hub facilities	27 N.J.R. 60(b)		
19:65-2.5	Approval criteria for hotel development projects	25 N.J.R. 5455(a)	R.1995 d.4	27 N.J.R. 144(b)

Most recent update to Title 19K: TRANSMITTAL 1994-11 (supplement November 21, 1994)

RULEMAKING IN THIS ISSUE—Continued

Tri-County Water Quality Management Plan:
Bordentown Sewerage Authority WMP ..... 588(b)
Mercer County Water Quality Management Plan:
Hamilton and Washington townships ..... 589(a)
HEALTH
Nursing home administrator licensure: examination fee ... 590(a)
HUMAN SERVICES
Child Protection Substance Abuse Initiative: grant program funds ..... 590(b)
Developmental Disabilities Council: 1995 Employment Incentive Grant ..... 591(a)
Educational Related Services for Fiscal Year 1996: funding for special education programs ..... 591(b)
CORRECTIONS
Incarcerated veterans unit: petition for rulemaking ..... 592(a)
INSURANCE
Surcharge for recoupment of Property-Liability Insurance Guaranty Association assessment ..... 592(b)

INDEX OF RULE PROPOSALS AND ADOPTIONS 593

Filing Deadlines

March 6 issue:
Adoptions ..... February 9
March 20 issue:
Proposals ..... February 17
Adoptions ..... February 27
April 3 issue:
Proposals ..... March 6
Adoptions ..... March 13
April 17 issue:
Proposals ..... March 17
Adoptions ..... March 24